Dec. 26, 1961 J. D. EVERS Re. 25,103

FUEL CONTROL WITH FEEDBACK

Original Filed Aug. 17, 1955 2 Sheets-Sheet 1

FIG. 1

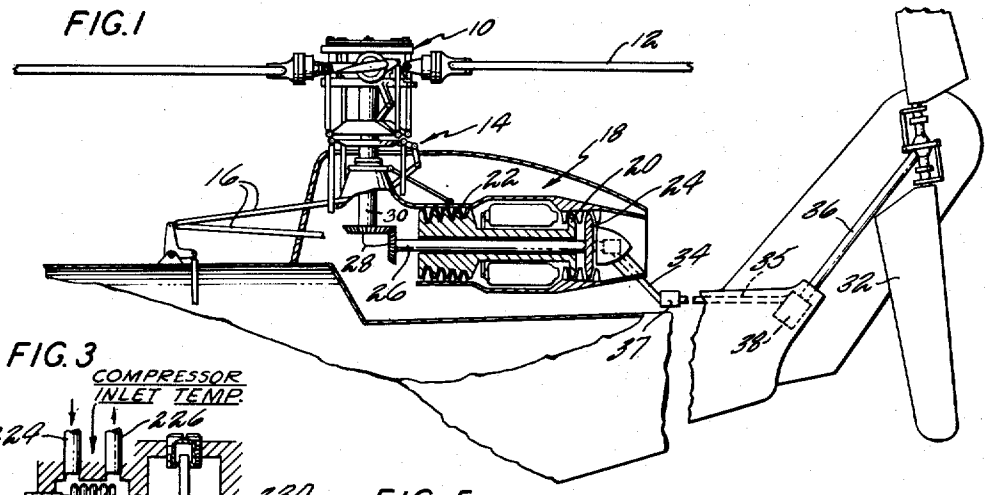

FIG. 3

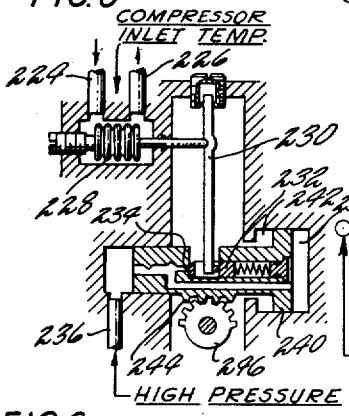

FIG. 5

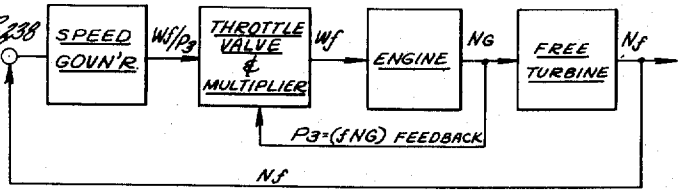

FIG. 6

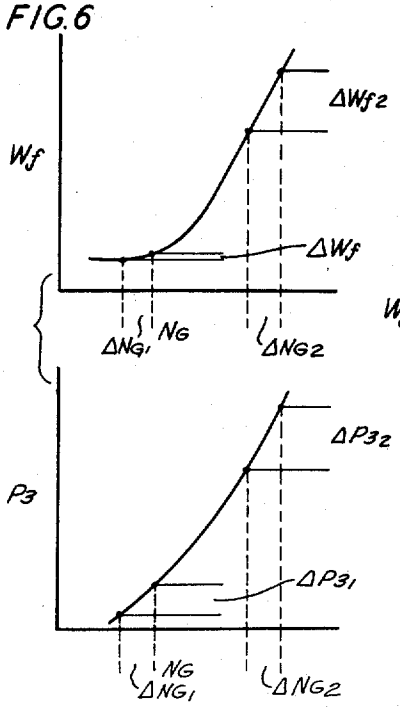

FIG. 4

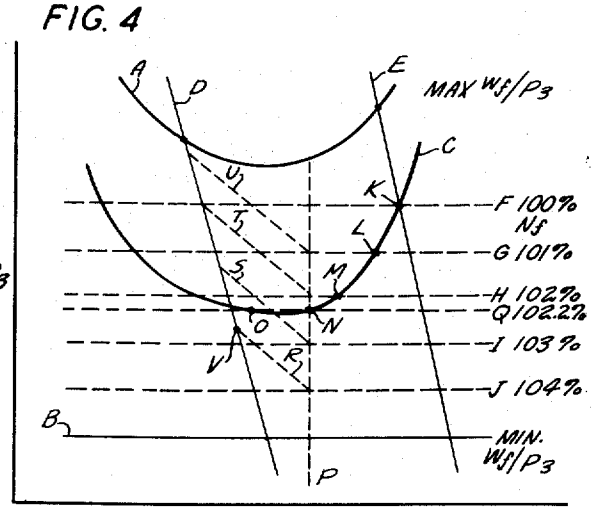

INVENTOR
JAMES D. EVERS
BY Thomas F. Webb
ATTORNEY

Dec. 26, 1961 J. D. EVERS Re. 25,103

FUEL CONTROL WITH FEEDBACK

Original Filed Aug. 17, 1955 2 Sheets-Sheet 2

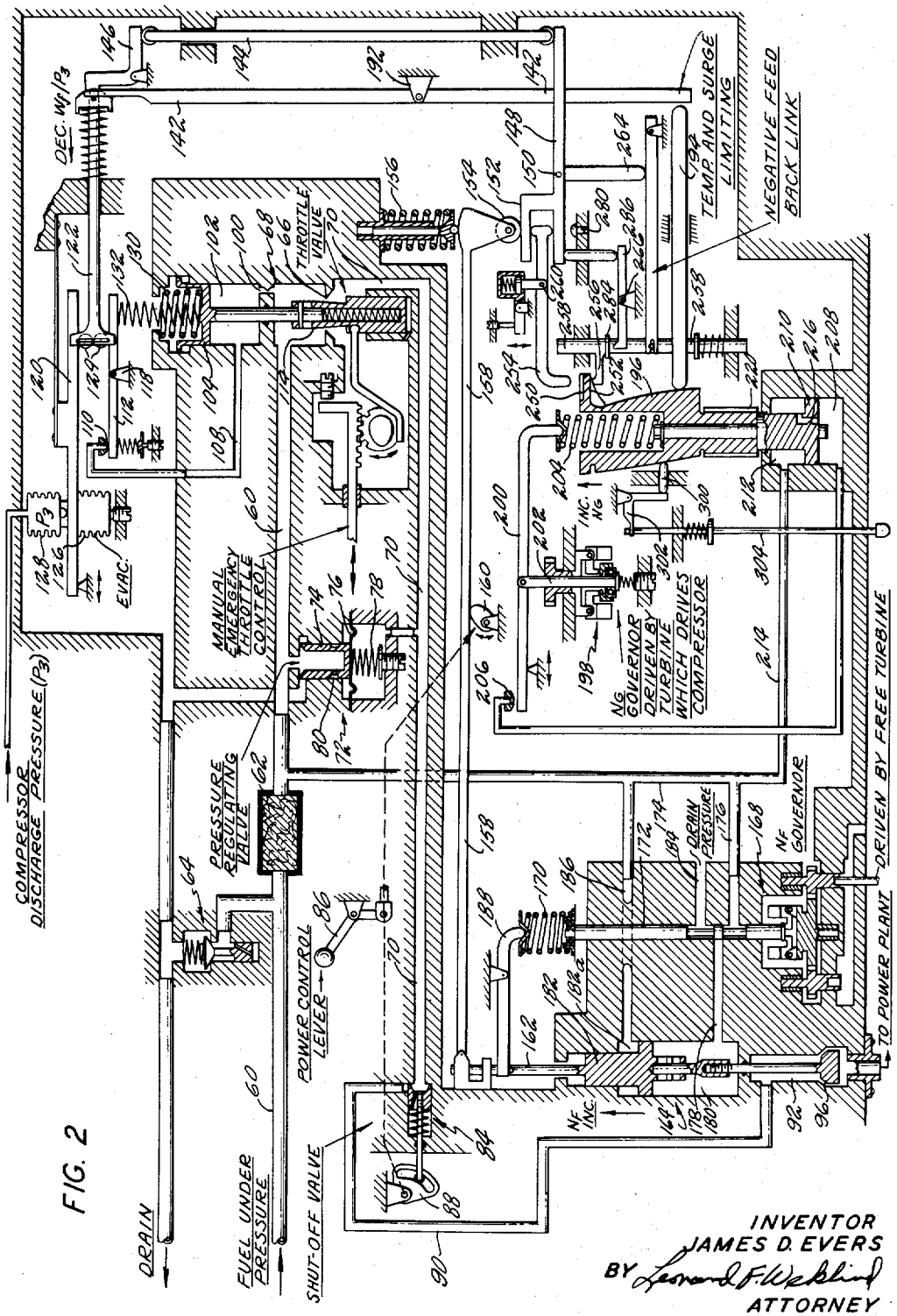

FIG. 2

INVENTOR
JAMES D. EVERS
BY Leonard F. Wehlind
ATTORNEY

United States Patent Office

Re. 25,103
Reissued Dec. 26, 1961

25,103

FUEL CONTROL WITH FEEDBACK

James D. Evers, Simsbury, Conn., assignor to United Aircraft Corporation, East Hartford, Conn., a corporation of Delaware

Original No. 2,857,741, dated Oct. 28, 1958, Ser. No. 528,873, Aug. 17, 1955. Application for reissue June 6, 1960, Ser. No. 34,347

10 Claims. (Cl. 60—39.16)

Matter enclosed in heavy brackets [ ] appears in the original patent but forms no part of this reissue specification; matter printed in italics indicates the additions made by reissue.

This invention relates to fuel controls and more specifically to fuel controls for turbine type power plants.

It is an object of this invention to provide a fuel control for a multiple turbine type power plant whereby the fuel is regulated primarily as a function of the speed of one turbine multiplied by a function of compressor discharge pressure. The speed function is in turn modified by a mechanism responsive to the speed of the second turbine and includes a governor controlled cam which has a feedback connection to the governor.

These and other objects of this invention will become readily apparent from the following detailed description of the drawings in which:

FIG. 1 is a fragmentary view of a helicopter having a turbine power plant installation according to this invention.

FIG. 2 is a schematic illustration of a fuel control particularly adapted to controlling a turbine of the type shown in FIG. 1.

FIG. 3 is a schematic illustration of the temperature sensing servo mechanism.

FIG. 4 is a graphic illustration of engine operating curves.

FIG. 5 is a block diagram of the engine and fuel control combination, and

FIG. 6 illustrates curves for fuel flow and compressor discharge pressure at various speeds.

Referring to FIG. 1, a typical helicopter installation for a turbine type power plant is illustrated. The helicopter may have a main rotor **10** including variable pitch blades **12** whose pitch can be controlled by linkage **14** and in turn moved by main pitch control link **16**. The particular operation of the various parts is more clearly illustrated in copending patent application 388,508 filed October 27, 1953, now Patent No. 2,811,324, issued October 29, 1957.

As seen herein, a turbine type power plant is generally indicated at **18**. The power plant has a first stage turbine **20** which drives the compressor **22**. A second stage turbine **24** has no connection to the turbine **20** or the compressor **22** but it drives the rotor **10** via the shaft **26**, gears **28** and shaft **30**. Since the first and second stage turbines are not physically connected to each other and the second stage turbine **24** drives only the rotor, it can be said that second stage turbine **24** is free or has only an aerodynamic connection with the compressor or the first stage turbine. In other words, only the fluid flow characteristics from the compressor and first stage turbine form any operative connection between these units. Since the second stage turbine **24** has no direct connection to the remainder of the power plant it is referred to as a free turbine. The speed of this free turbine **24** is referred to hereinafter as (N_F). The free turbine **24** also drives a tail rotor **32** via shafts **34**, **35**, **36** and couplings **37** and **38**. In order to properly control this power plant rotor combination it is necessary to sense the speed of the free turbine **24** (N_F) and the speed of the turbine **20** including the compressor **22** and the speed of the latter is hereinafter referred to as (N_G). It is also necessary to sense

compressor inlet temperature and compressor discharge pressure. The various ways in which these parameters of power plane operation are utilized in controlling a fuel flow is more clearly described in connection with FIG. 2.

The fuel control of this invention is schematically illustrated in FIG. 2. Generally, the control meters fuel as a function of speed multiplied by a function of compressor discharge pressure. The speed of the free turbine (N_F), in other words the turbine that drives the helicopter rotor, is utilized for steady state control. Maximum limiting however is induced as a force in the system as a function of the speed of the turbine which drives the compressor and a function of the inlet air temperature and compressor discharge pressure. These basic parameters or variables of power plant operation each function to control fuel control in a manner to be described hereinafter.

Referring to FIG. 2, fuel under pressure flows into the main line **60** and through a filter **62**. The pressure relief valve is generally indicated at **64** and prevents fuel pressure from exceeding a given value. Fuel from the main line **60** is metered through an orifice **66** in the main throttle valve generally indicated at **68**. The metered fuel flows pass the orifice **66** and then to the line **70**. A pressure regulator valve **72** is shunted across the throttle valve inlet line **60** and the valve outlet line **70**. The pressure regulating valve **72** maintains the pressure drop across the metering orifice **66** at a predetermined value. The pressure regulating valve **72** includes a piston **74**, a diaphragm **76** and a spring **78**. The bottom of the diaphragm **76** is exposed to fuel pressure on the downstream side of the throttle valve. The top side of the diaphragm is exposed to fuel pressure at the inlet side of the throttle valve. Fuel under pressure from the main line **60** flows into an orifice and land **80** into piston **74**. The piston **74** has a lapped fit with its surrounding wall but the fit is not sufficient to prevent passage of fuel to the upper side of the diaphragm **76**. By passing high pressure fuel to the upper side of the diaphragm in this manner a damping effect is provided. Metered fuel in the line **70** then flows past a manual shut-off valve generally indicated at **84**. The shutoff valve **84** is operatively connected to the main power control lever **86** by means of a lost motion member **88**. The shutoff valve is intended to positively cut off fuel when the power control lever is moved to a closed position. Metered fuel flows past the shutoff valve **84** into the line **90** and then into the chamber **92** past an overspeed shutoff valve **96** and then to the power plant. The operation of the overspeed shutoff valve **96** will be described hereinafter.

In the main throttle valve **68** the fuel under inlet pressure passes through a restriction **100** and into the chamber **102** wherein it acts on the bottom of a piston **104**. This high pressure fuel flows into line **108** and thence out of an orifice **110**. The rate with which the fuel is discharged from the orifice depends upon the position of the lever or valve member **112**. For a given opening of the orifice **110** there will be a certain pressure in the chamber **102** acting on the piston **104**. It will be noted that movement of the piston **104** causes movement of the integral throttle valve stem **114** to thereby vary the area of the metering orifice **66**. The lever **112**, which varies the opening of the orifice **110**, pivots about the point **118** and controls the position of the servo piston **104** and hence the opening of the throttle valve. The lever **112** is, in turn, positioned by a combination of two main forces, one of these forces is that produced in the lever **120** and the other force is produced by the lever **122** through its rollers **124**. The lever **120** has a force imposed upon it by means of a pair of bellows **126** and **128**. The bellows **126** is evacuated while the inside of bellows **128** is exposed to compressor discharge pressure (P_3) so that these bellows impose a

force or signal in lever **120** as a function of compressor discharge pressure absolute. The lever **122** has a force imposed thereon for a function of speed, or speed and temperature, in a manner to be described hereinafter.

When compressor discharge pressure increases, the force on lever **120** is increased in a downward direction thereby causing the rollers **124** to move down and the right hand of lever **112** to move downwardly a slight increment thereby decreasing the flow from the orifice **110**. This increases the pressure in the chamber **102** beneath the piston **104** thereby moving the piston **104** in an upward direction against the force of the heavy spring **130**. This results in an increase of the opening of the main throttle valve. This upward movement of the throttle valve stem **114** and the servo piston **104** causes an increase in force on the right-hand end of lever **112** through the action of a force feedback spring **132**, and restores to their balanced position the members **112** and **120**.

Referring again to the link **122** of the force multiplying mechanism, the rollers **124** permit the link **122** to move to the left or right in response to motion of the vertical link **142**. This motion of link **122** varies the mechanical advantage of the links **112** and **120** such that there will be a different throttle valve setting for a given force application on the links **112** and **120**. It should be added that when mentioning that any of the parts have motion this motion is extremely small and the system is primarily a force balance system. Thus if there is any motion imparted to the member **122** the moment arms through which the other forces are acting will change to cause a force unbalance. The throttle valve **114** will then assume a new position to rebalance the forces. Thus motion of **122** toward the right increases the moment arm of the force acting through **120** on rollers **124** and in turn the moment arm of the right side of **112** which acts on spring **132**. This unbalance will be reflected in an increase in throttle valve opening and a rebalancing of the system.

The link **122** is moved to the left or right via the link **142** in response to one or more of several parameters of power plant operation depending on whether the control is in steady state operation or under maximum limiting operation such as during acceleration overspeed or underspeed. The link **122** is also controlled by the vertical link **144** which actuates a pivoted bell crank-type member **146** through link **142**. The vertical link **144** is operated by a member **148** which is pivoted at **150** intermediate the ends thereof and has its left end terminated in a bifurcated portion **152**. The portion **152** is engaged by a roller **154** which is backed up by a spring **156** and is located at the right-hand end of a bar **158**. The bar **158** is pivoted about a cam **160** which cam is rotated by the power control lever **86**. The left-hand end of the bar **158** is connected by a link **162** to a servomotor generally indicated at **164**. The servo piston **182** provides a motion proportional to speed of the free turbine (N_F) such that combined with the desired speed setting of the cam **160**, the right-hand end of the bar **158**, including the roller **154**, is moved, rotating link **148** about pivot **150** and thereby translating vertical rod **144** which then would be positioned proportional to speed error. This motion or speed error in turn is transmitted through the bell crank **146** and to the rod or link **122** to the throttle mechanism so as to adjust the throttle valve in a manner to be described below. This speed error signal is the main governing signal of the fuel control.

This governing is accomplished by the governor generally indicated at **68** in the lower left-hand corner of FIG. 2. The flyball governor **168** is driven by the free turbine or the turbine which drives the rotor of the helicopter, or the propeller in the case of a turboprop type installation. The flyball force of the governor **168** is opposed by a spring **170** such that the servo valve **172** moves up or down in response to a force unbalance allowing either high pressure fluid to flow from the line **174** to the line **176**, then to the line **178**, to the chamber **180**, to the bottom of the servo piston **182**, or low pressure fluid to flow from line **178** through the pilot valve to line **184**. It should be noted that the chamber **182A** of the servo piston **182** is connected continuously to high pressure fluid via the line **186**.

Movement of the servo piston **182** readjusts the force exerted by the spring **170** through the operation of lever **188** to rebalance the force exerted by the governor flyballs and stop the motion of the servo valve **172** and the servo piston **182**. From the foregoing, it is apparent that the position of the servo piston **182** will at all times be proportional to the free turbine speed (N_F). It is further apparent then that the left-hand end of the longitudinal bar **158** is subjected to a position proportional to free turbine speed while, intermediate the ends of the bar **158**, the cam **160** is positioned in proportion to desired speed whereby the right-hand end of the bar **158** provides a signal proportional to the speed error at any particular instant. The right-hand end of bar **158** including its roller **154** sends the speed error signal through the bifurcated end of the bar **152** of the bar **148** to the vertical link **144** etc. to position the throttle valve accordingly. To follow a typical operation of the speed signal, consider the condition where the load on the helicopter rotors is suddenly reduced for some reason which causes the rotor and the free turbine to overspeed. In this event, the flyballs of the governor **168** will move outwardly forcing the servo valve **172** in an upward direction thereby allowing high pressure fluid to act on the body of the servo piston **182** and moving the servo piston upwardly. Through the action of the lever **188**, the spring **170** will be compressed thereby rebalancing the flyball force and stopping the motion of the pilot valve **172** and the servo piston **182**. However, the new position of the servo piston **182** will be transmitted through the link **162** to the bar **158** to vary the position of the roller **154** on the bifurcated end **152** of link **148**. This motion rotates lever **148** counterclockwise on pivot **150** moving the rollers **124** toward decrease fuel flow per unit compressor discharge pressure through action of links **144**, **146**, **142** and **122**.

The steady state governing assembly includes an overspeed valve **96** which is connected to the bottom of the servo piston **182**. For a given overspeed condition and upward movement of the servo piston **182**, the valve **96** will assume a closed position so as to prevent flow of fuel to the power plant. This overspeed valve **96** is necessary in a helicopter installation.

The relative inertia of the power plant and rotor are such that dangerous overspeeds might readily cause disintegration of the power plant if the normal fueling control elements had to be relied upon to suddenly decrease fuel flow under certain conditions; thus, the position of the servo piston **182** is the best indicator of an overspeed condition and acts substantially instantly to regulate or shut off the flow of fuel.

As previously mentioned, the rollers **124** and the link **122** are also subject to motion from the vertical link **142** which is pivoted intermediate its ends at **192** during acceleration limiting. The lower end of link **142** is engaged by a rod **194** which has its left end in engagement with a cam **196**. The cam **196** is both reciprocable along its vertical axis and also rotatable about that axis. To the left of the cam **196** a governor is generally indicated at **198**. The governor **198** senses the speed of the compressor, and of course, the turbine which drives the compressor. The governor **198** exerts a force on a lever **200** by means of the vertical member **202**. The lever **200** is pivoted to the member **202** and the lever **200** has its right-hand end in engagement with a spring **204** while the left-hand end of the lever **200** varies the opening of

an orifice **206**. Hence, any variation in compressor speed changes the area of the orifice or valve **206** thereby changing the pressure in the chamber **208** at the lowermost portion of the three-dimensional cam **196**. The pressure in the chamber **208** controls the position of a piston **210** which, in turn, moves the cam **196** vertically. The chamber **212** on the upper side of the piston **210** is continuously fed high pressure fuel via a line **214**. This high pressure fuel passes through a restriction **216** in piston **210** and thence to chamber **208**. The pressure in the chamber **208** is varied in accordance with the opening of the orifice **206** which opening, in turn, is controlled via the governor **198**. As in the previously described servo mechanism, any change in position of the servo piston **210** and its attached three-dimensional cam **196** will vary the compression of the spring **204** to rebalance the system, that is, to restore the opening of the orifice **206** whereby the system is in balance. Thus, the three-dimensional cam **196** has a different axial position for every compressor speed.

The three-dimensional cam **196** is rotated about its vertical axis through a gear **220**. The mechanism for rotating the cam is schematically illustrated in FIG. 3. Thus, compressor inlet air is circulated through the lines **224** and **226** so that the bellows **228** expands or contracts in relation to the temperature of the inlet air. The bellows **228** is linked to a vertical rod **230** which at its lower end is connected to a servo valve **232**. The servo valve **232** varies the opening of the orifice **234** which is receiving high pressure fluid from a line **236**. This high pressure fuel flows to the right-hand side **238** of servo piston **240**, but, the valve **232** and the orifice **234** control the pressure to the left-hand side **242** of the piston **240**. Hence, any variation in position of the valve **232** varies the position of the servo piston **240** and its integral rack **244** thereby rotating the gear segment **246** which is equivalent to the gear **220** on the three-dimensional cam of FIG. 2.

The three-dimensional cam **196** also includes at its upper end cam surfaces **250** and **252**. These surfaces are intended to engage the left-hand end of lever **254** and the arm **256** respectively. The arm **256** is integral with a vertically movable rod **258**. It is thus seen that during limiting the cam surface **196** can move the horizontal rod **194** and the cam surfaces **250** and **252** can effect the rods **254** and **256** respectively.

Assuming, for example, that the compressor speed has increased to a value where it is to be limited from further increase for optimum engine performance and safety, the cam surface **250** will engage the left end of the topping lever **254** and will rotate the lever **254** clockwise about its pivot **260** thereby also causing the rod **148** to move counterclockwise about its pivot **150**. This motion is transmitted to the vertical link **144** and bell crank **146** to the horizontal link **122** to move it in a decreased fuel flow per compression discharge pressure direction.

Movement of the main cam **196** in a downward direction in response to a decrease in compressor speed toward a dangerously low r.p.m. will cause the cam surface **252** to engage the arm **256** and cause downward motion thereof along with the rod **258**. This eventually causes the rod **286** to rotate counterclockwise about its pivot **266** thereby forcing the left-hand end of the bar **148** upwardly. This motion is transmitted to the vertical link **144** through bar **148** and then to the horizontal link **122** which is moved in a fuel per unit compressor discharge pressure increase position. Thus the control provides a "topping" and "bottoming" function to prevent excessive speed or too low a speed.

Maximum and minimum fuel flow limiting for a transient operation of the engine is described immediately following. During an acceleration of the engine it is desirable to have the largest fuel flow per unit compressor discharge pressure possible in order to provide fast response to the pilot's motion of the power lever. In order to prevent compressor surge and overtemperature,

however, it is necessary to limit the maximum fuel flow for given conditions. Herein, the limiting is accomplished as a schedule of fuel flow in proportion to a function of compressor speed, compressor inlet temperature and compressor discharge pressure. Thus, as seen in the lower right-hand corner of FIG. 2, the horizontal link **194** assumes a position as a function of compressor speed and compressor inlet temperature through the main cam **196**. The link **194** in turn transmits a position to the vertical link **142** which imposes a limit on the horizontal link **122** to prevent its further movement toward an increase fuel flow per unit compressor discharge pressure. Therefore, if the power control lever **86** calls for an increase speed through its cam **160**, the right-hand end of the rod **158** tends to move upwardly thereby rotating rod **148** clockwise about its pivot **150** thereby permitting the vertical link **144** to move downwardly and the main horizontal link **122** to move toward an increase fuel flow per compressor discharge pressure. This increase fuel flow per unit compressor discharge pressure signal, however, will be limited by the particular position of the limiting links **194** and **142**, depending upon the particular compressor speed and inlet temperature existing at that instant.

Minimum fuel flow per compressor discharge pressure is established by a stop **280** which engages the left-hand end of link **148**. A negative feedback link identified in FIG. 2 is provided for reasons described immediately hereafter. The operation of the negative feedback link is best described by referring to the curves shown in FIG. 4. The standard plot of the ratio of fuel flow to compressor discharge pressure vs. speed (in this case the speed of the engine compressor) is shown. Line A represents the maximum allowable fuel flow per compressor discharge pressure for engine acceleration as established by the characteristics of the engine for prevention of pressure surge and overtemperature conditions. This is the fuel flow limit that is accomplished in the control by the main cam **196** of FIG. 2. Line B represents fuel flow limiting as accomplished by means of the minimum flow stop **280**. Line C is the steady state characteristic of the engine. Lines D and E are established by the "bottoming" and "topping" functions of the control respectively. Lines F, G, H, I and J represent lines as established by the free turbine governor **168** of FIG. 2.

Assuming that the pilot calls for 100% rotor speed by means of rotating speed setting cam **160** in a suitable manner the engine will operate at point K (i.e. 100% engine speed) if the expected design load is present at the rotor of the helicopter. If the load on the helicopter rotor and consequently the load on the power or free turbine should decrease, the rotor and turbine combination would tend to overspeed and the governing mechanism would call for less fuel flow in order to correct for said overspeed. If, for example, a 1% overspeed should occur line G on FIG. 4 would represent the fuel flow vs. compressor discharge pressure ratio which the governing portion of the control would call for, if a 2% overspeed occured line H would represent the fuel flow ratio called for by the control, and so on. In the case of a 1% overspeed resulting from a decrease in load on the helicopter rotor and power turbine combination, speed of the engine would be decreased such that operation would now occur at point L on the engine steady state line. Similarly, for an overspeed of 2% the engine would operate at point M on the steady state line. Now if an overspeed of slightly more than 2%, say 2.2% should occur, a certain fuel flow ratio as evidenced by line Q would be called for and the engine would be expected to operate at the point where said line intersects the engine steady state curve. It is this region of engine operation represented by the steady state curve between line P and the bottoming line D where an unstable condition could exist. Thus a means for providing a greater degree of stability becomes desirable. Lines R, S, T, and U represent such a provision and are accomplished

in the control by means of the negative feedback link and its attending mechanism.

Still referring to FIG. 4, let it be assumed that the governing portion of the control is calling for a decrease in fuel flow per unit compressor discharge pressure as a result of an overspeed of the power turbine and that the speed of the engine is decreasing toward a value represented at line P. The bottoming cam surface of FIG. 2 will contact the arm **256** and via the rod **258** will move the left-hand end of the negative feedback in a downward direction thereby allowing link **264**, which engages the feedback link, to move in a downward direction. This moves the pivot **150** downwardly thereby permitting the right side of rod **148** to move in a downward direction thus calling for an increase in fuel flow per unit compressor discharge pressure at a rate which is increasing with a decrease in engine speed. This provides the characteristic as indicated by lines R, S, T, and U. If the overspeed is of the magnitude such as indicated by lines J and R, the negative feedback line will intersect the bottoming governor line which in turn will limit the decrease in engine speed. If the speed of the engine decreases to the value represented by point L in FIG. 4 the shoulder (FIG. 2) **284** of vertical rod **258** will contact the bottoming lever **286** which, in turn, causes the bar **148** to move downward at its right-hand end and pivot about **150** to sharply increase fuel flow per unit compressor discharge pressure.

The necessity of the negative feedback provision is explained by the consideration of the response times of the various elements in the system in connection with a consideration of engine characteristics in respect to fuel consumption and the variation of compressor discharge pressure over a speed range.

Looking at FIG. 5 and keeping in mind the nature of the connection between each box of the block diagram it will be evident that two of said connections are of a relatively slow acting type. Since the only connection between the engine and the free turbine is one of an aerodynamic nature, response to the free turbine to change in engine speed will be slow in comparison with the response of other elements. Likewise, since the signal sent back to the speed governor which is responsive to the speed of the free turbine is dependent upon the response time of said free turbine, it will have a relatively slow response time. The effect of feeding the compressor discharge pressure back to the throttle valve and multiplier is to effectively increase the gain of the system since the feedback is of a positive nature. If, for example, the speed governor calls for an increase in fuel flow per unit compressor discharge pressure as a result of an underspeed existing in the free turbine, as the engine speed increases the compressor discharge pressure signal fed back to the multiplier will likewise increase since an increase in engine speed causes an increase in compressor discharge pressure. The effect of the compressor discharge pressure feedback therefore is to further increase the flow of fuel to the engine which effect occurs because of the delay in the signal indicative of a changed free turbine speed reaching the speed governor to call for a decrease in fuel flow. It will therefore be seen that, if for any region of the engine's operation the compressor discharge signal which is being fed back to the engine multiplier and throttle valve is of an unduly large magnitude, unstable system operation will result from the extremely high gain caused. This may occur in the region enclosed by the lines P and D of FIG. 4 for the following reasons:

FIG. 6 illustrates the engine characteristics as regards fuel consumption and compressor discharge pressure over a similar speed range. From an examination of the two curves it will be seen that at a relatively high speed the change in fuel flow for a given change in speed is of a magnitude similar to the magnitude of the change in compressor discharge for the same change in speed.

However, at lower speeds (enclosed by lines P and D of FIG. 3) the change in compression discharge pressure for a given change in speed is considerably larger than the change in fuel flow for the same change in speed. Thus, at these low speeds the compressor discharge pressure signal (referring again to FIG. 5) fed back to the throttle valve and multiplier has a larger effect for a given speed error than its effect for the same speed error in a higher speed region.

The negative feedback provision previously described, acts to decrease the magnitude of the speed error signal entering the throttle valve and multiplier unit, thereby decreasing the gain of the system and tending to balance the effect of the compressor discharge pressure feedback in the critical speed region. Thus a more stable operation is provided by its incorporation. Other methods for accomplishing the same purpose would be to incorporate a lag in the compressor discharge pressure feedback or to improve the response time of the free turbine and thereby provide a faster subtracting signal for the speed governor. It should be noted that the necessity of incorporating the feedback or other corrective measures arises only because in the particular application at hand it is necessary to operate the engine in the critical speed region and if it were possible to restrict operation of the engine to the right of line P in FIG. 3 the provision of feedback or other means similar would probably not be necessary.

Referring again to FIG. 2 it will be noted that the main three-dimensional cam **196** is engaged on its left side by a follower **300** which in turn actuates a bell crank **302** and a rod **304**. The rod **304** is intended to provide another signal which is a function of compressor speed and compressor inlet temperature. This signal may be sent through a servo device and may, for example, control some member or portion of the power plant. A typical use for such a signal is to vary the angle of the stator blades in the compressor for different operating conditions.

As a result of this invention, it is apparent that a fuel control has been provided having particular novel features.

Although only one embodiment of this invention has been illustrated and described herein it will be apparent that various changes and modifications may be made in the construction and arrangement of the various parts without departing from the scope of this novel concept.

What is desired by Letters Patent is:

1. In a fuel control for a turbine type power plant having a compressor and a combustion chamber for generating propelling gases, a first turbine for driving said compressor and driven by said gases, a source of fuel under pressure, means for regulating the flow of fuel from said source to said combustion chamber, a rotor, a second turbine driven by the gases from said combustion chamber for driving said rotor, means responsive to the speed of said second turbine for producing a first signal, means responsive to compressor pressure for producing a second signal, means for multiplying said signals for controlling said regulating means, means for modifying said first signal including means responsive to the speed of said first turbine including a governing device, a member movable by said governing device, a servo device controlled by said member and having operative connections to said means for producing said first signal, and a separate connection betwen said servo device and said member.

2. In a fuel control for a turbine type power plant having a compressor and a combustion chamber for generating gases, a first turbine for driving said compressor and driven by said gases, a source of fuel under pressure, means for regulating the flow of fuel from said source to said combustion chamber, a rotor, a free turbine driven by the gases from said combustion chamber for driving said rotor, means responsive to the speed of said free turbine for producing a first signal, means responsive to

compressor pressure for producing a second signal, means for multiplying said signals for controlling said regulating means, means for modifying said first signal including means responsive to the speed of said first turbine including a governing device, said last mentioned means including a servo device controlled by said governor device and operatively connected to said means responsive to the speed of said free turbine, and a mechanical connection between said servo device and said governing device.

3. In a fuel control for a turbine type power plant having a compressor and a combustion chamber for generating gases, a first turbine for driving said compressor and driven by said gases, a source of fuel under pressure, means for regulating the flow of fuel from said source to said combustion chamber, a second turbine driven by the gases from said combustion chamber, means responsive to the speed of said second turbine for producing a first signal, means responsive to compressor pressure for producing a second signal, means for multiplying said signals for controlling said regulating means, means for modifying said first signal including means responsive to the speed of said first turbine including a governing device, a member reciprocable by said governor, a beam pivotally supported on said member intermediate its ends, a pilot valve controlled by one end of said beam, a servo device regulated by said pilot valve including a movable cam, said cam having operative connections to said means for producing said first signal, and means operatively connecting said cam to said beam.

4. In a fuel control for a turbine type power plant having a compressor and a combustion chamber, a first turbine for driving said compressor, a source of fuel under pressure, means for regulating the flow of fuel from said source to said combustion chamber, a second turbine driven by the gases emitted from said first turbine, means responsive to the speed of said second turbine for producing a first signal, means responsive to compressor pressure for producing a second signal, means for multiplying said signals for controlling said regulating means, means for modifying said first signal including means responsive to the speed of said first turbine including a governing device, a member reciprocable by said governor, a beam pivotally supported on said member intermediate its ends, a pilot valve controlled by one end of said beam, a servo device regulated by said pilot valve, said servo device having operative connections to said means for producing said first signal, and means for operatively connecting said servo device to the other end of said beam.

5. In a fuel control for a turbine type power plant having a compressor and a combustion chamber, a first turbine for driving said compressor, a source of fuel under pressure, means for regulating the flow of fuel from said source to said combustion chamber, a second turbine driven by the gases emitted from said first turbine, means responsive to the speed of said second turbine for producing a first signal, means responsive to compressor pressure for producing a second signal, means for multiplying said signals for controlling said regulating means, means for modifying said first signal including means responsive to the speed of said first turbine including a governing device, a member reciprocable by said governor, a beam pivotally supported on said member intermediate its ends, a pilot valve controlled by one end of said beam, a servo device regulated by said pilot valve including a movable cam, said cam having operative connections to said means for producing said first signal, and means operatively connecting said servo device to the other end of said beam.

6. In a fuel control for a turbine power plant having a compressor, a combustion chamber for generating gases, a first turbine driving said compressor and driven by said gases, said combustion chamber gases driving a second turbine, a load producing mechanism driven by said second turbine, said power plant operating over two ranges of operation and at least one of said ranges being unstable, a source of fuel under pressure, means for regulating the flow of fuel from said source to said combustion chamber, means responsive to the speed of said second turbine for producing a first signal, means responsive to compressor pressure for producing a second signal, means for multiplying said signals for controlling said regulating means during at least one of said ranges, means responsive to the speed of said first turbine for producing a third signal, means including a negative feedback member responsive to said third signal for modifying said first signal during said unstable range of said power plant operation.

7. In a fuel control for a turbine power plant having a compressor and a combustion chamber, a first turbine for driving said compressor, a source of fuel under pressure, means for regulating the flow of fuel from said source to said combustion chamber, a second turbine driven by the gases emitted by said combustion chamber, means responsive to the speed of said second turbine for producing a first signal, means responsive to a power plant operating variable for producing a second signal, means for multiplying said signals for controlling said regulating means, means responsive to the speed of said first turbine for producing a third signal including a governor, a member reciprocable by said governor, linkage means including a negative feedback lever engageable with said member and adapted for modifying said first signal.

8. In a fuel control for a turbine power plant having a compressor and a combustion section for generating gases, said power plant operating over two ranges of operating conditions where one of said ranges in unstable, a first turbine drivingly connected to said compressor and driven by said gases, a source of fuel under pressure, means for regulating the flow of fuel from said source to said combustion section, a second turbine driven by gases emitted from said combustion section and driving a variable load, the speed of said first turbine and second turbine normally at a proportional speed relationship with each other, said variable load having a high inertia relative to said compressor, the difference of said inertia causing a variance in time responsiveness such that one turbine reacts differently to a change in speed relative to the other turbine reacting to said change in speed upsetting the speed proportionately of both of said turbines, means responsive to the speed of said second turbine for producing a first signal, means responsive to the compressor pressure for producing a second signal, means for multiplying said signals for controlling said regulating means, means responsive to the speed of said first turbine including a governor, a member movable by said governor, means cooperating with said member, including a negative feedback linkage, said linkage operatively connected to said second turbine speed responsive means for modifying said first signal for maintaining said speed proportion relation of said first turbine with respect to said second turbine.

9. In a fuel control for a turbine power plant having a compressor, a combustion chamber, a first and second turbine, a source of fuel under pressure, means for regulating the flow of fuel from said source to said combustion chamber, means responsive to the speed of said first turbine for producing a first signal, means responsive to the compressor pressure for producing a second signal, means for multiplying said signals for controlling said regulating means, means for biasing said regulating means including a feedback linkage, means responsive to the speed of said second turbine, including a governing device and a movable member being adapted to produce a third signal, means cooperating with said third signal to vary the position of said feedback linkage, and means connecting said feedback linkage to said regulating means for biasing said regulating means in accordance with said position.

10. In a fuel control for a turbine power plant hav-

ing a compressor, a combustion chamber for generating gases, a first turbine driving said compressor and driven by said gases, said first turbine emitting gases for driving a second turbine, a rotor driven by said second turbine, a source of fuel under pressure, means for regulating the flow of fuel from said source to said combustion chamber, means responsive to the speed of the second turbine for producing a first signal, a power lever, means responsive to the position of said power lever for producing a second signal, a signal indicating bar adapted to receive said signals and convert said signals to an error signal indicative of the value of the difference of said signals, means responsive to a power plant operating condition for producing a third signal, means for multiplying said third signal with said error signal for controlling said regulating means, means for modifying said first signal including means responsive to the speed of the first turbine in-

cluding a governing device, a member movable by said governing device having operative connections to a connecting bar, said bar adapted to overrule the position of said signal indicating bar for varying said regulating means.

References Cited in the file of this patent
or the original patent

UNITED STATES PATENTS

2,603,063	Ray	July 15, 1952
2,625,789	Starkey	Jan. 20, 1953
2,629,982	Hooker	Mar. 3, 1953
2,668,415	Lawrence	Feb. 9, 1954
2,759,549	Best	Aug. 21, 1956
2,856,754	Torell	Oct. 21, 1958
2,861,638	Grosselfinger et al.	Nov. 25, 1958