Nov. 27, 1934. V. NEUMANN 1,982,119

AMUSEMENT MACHINE

Filed Jan. 25, 1932 3 Sheets-Sheet 1

Fig. 1

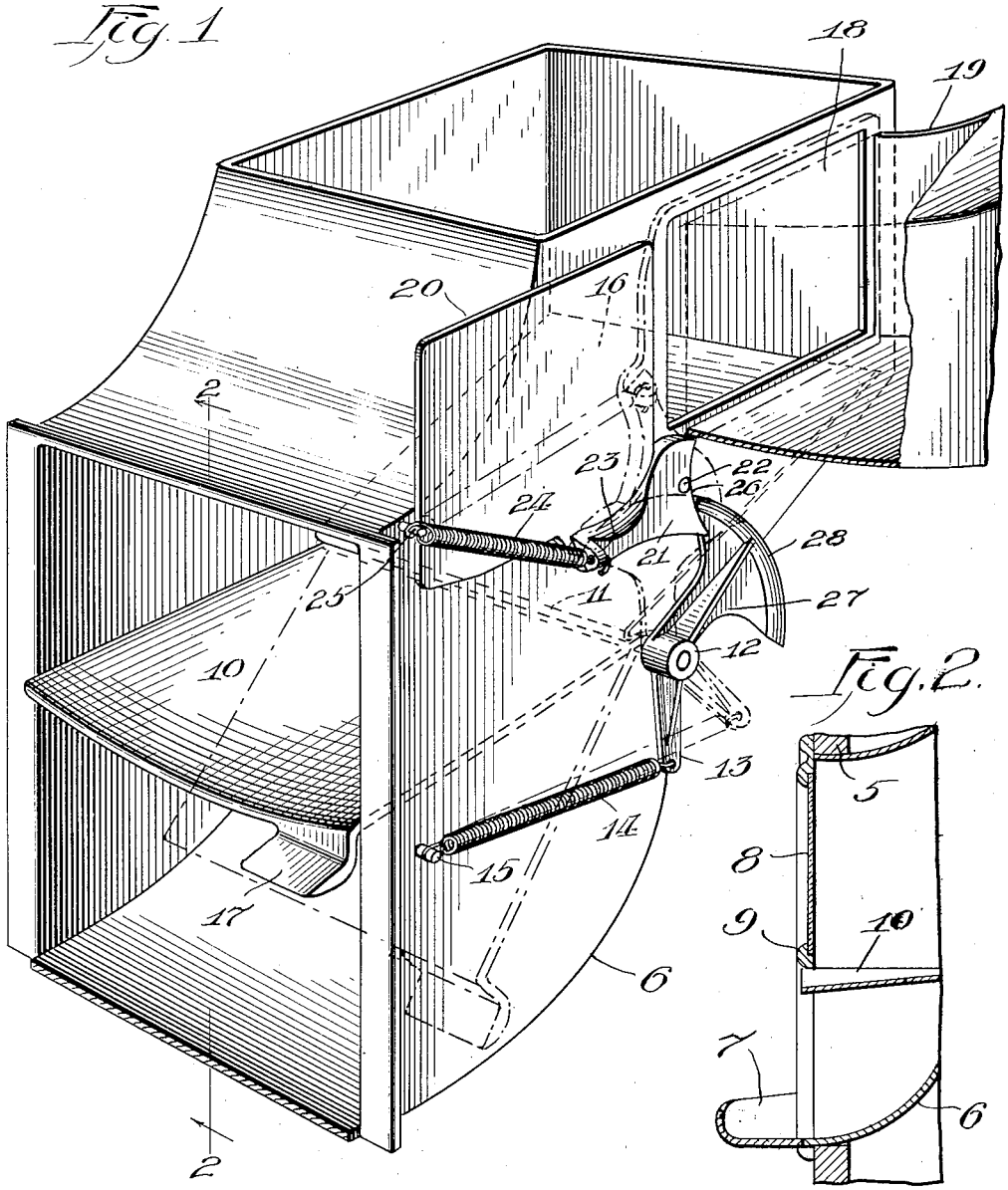

Fig. 2.

Inventor:
Victor Neumann
by Wm. O. Bell
Atty

Nov. 27, 1934. V. NEUMANN 1,982,119

AMUSEMENT MACHINE

Filed Jan. 25, 1932 3 Sheets-Sheet 2

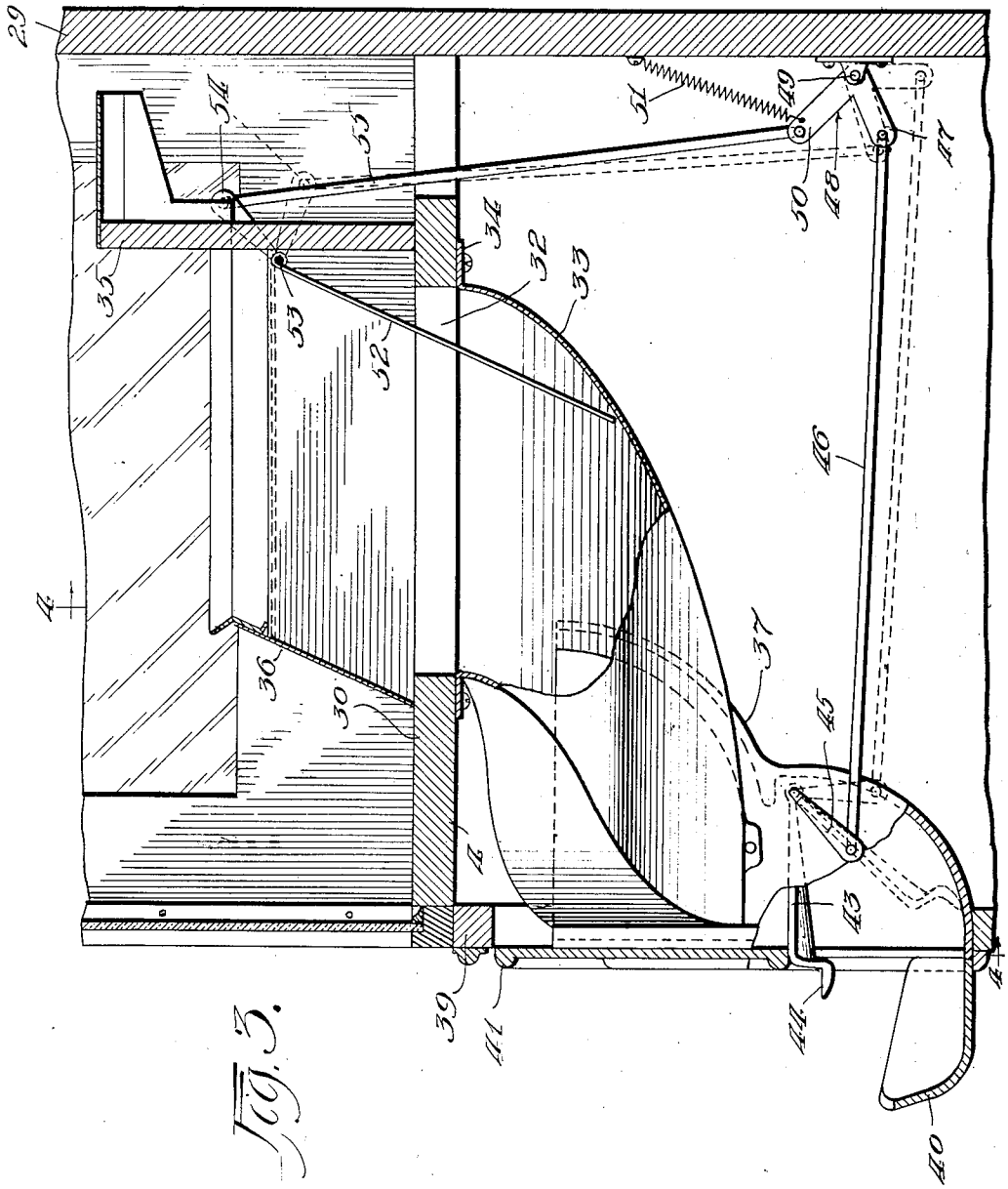

Fig. 3.

Inventor:
Victor Neumann
By Wm. V. Bleh
Attorney

Nov. 27, 1934. V. NEUMANN 1,982,119

AMUSEMENT MACHINE

Filed Jan. 25, 1932 3 Sheets-Sheet 3

Fig. 4.

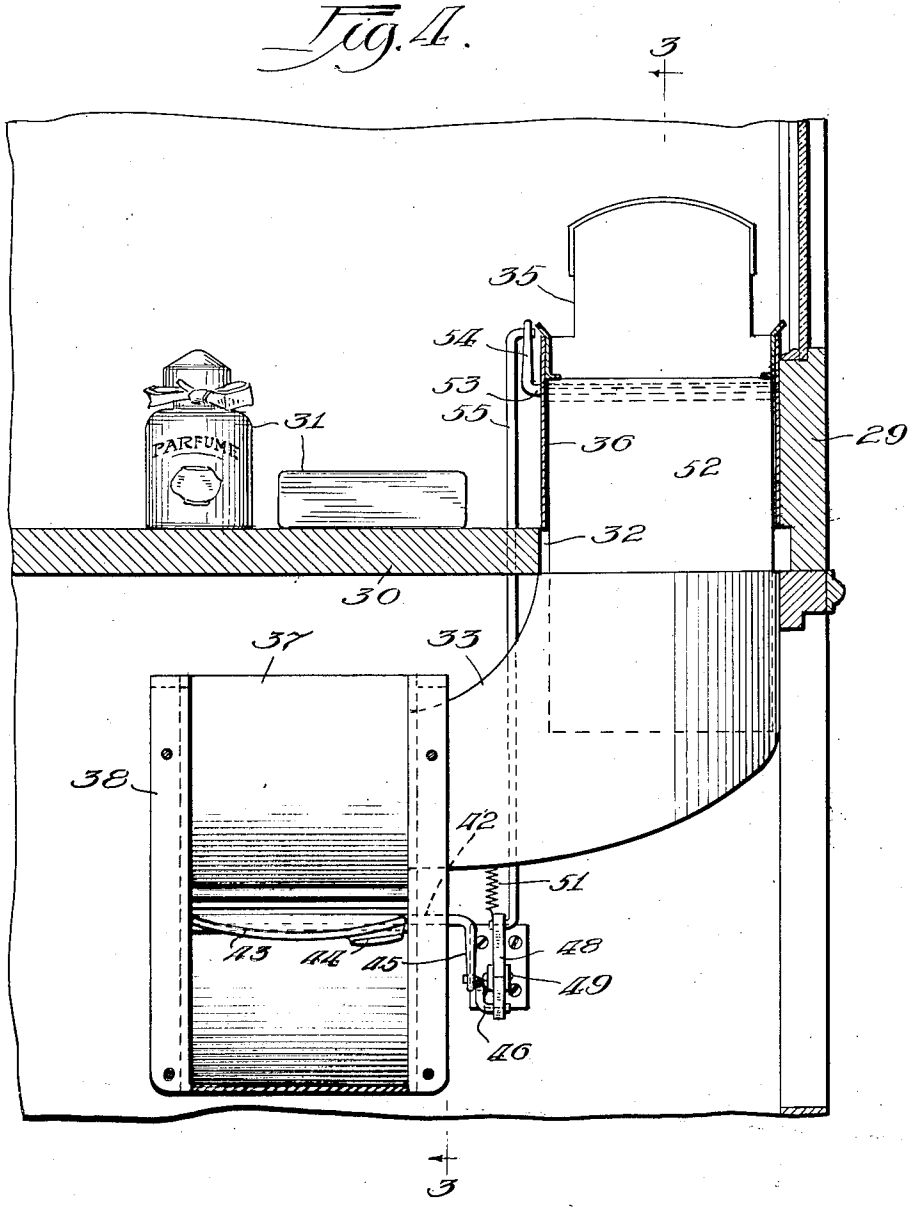

Inventor:
Victor Neumann
By Wm. O. Bell
Attorney.

Patented Nov. 27, 1934 1,982,119

UNITED STATES PATENT OFFICE

1,982,119

AMUSEMENT MACHINE

Victor Neumann, Los Angeles, Calif., assignor to John F. Meyer, Pasadena, Calif.

Application January 25, 1932, Serial No. 588,553

4 Claims. (Cl. 312—35)

This invention relates to a discharge chute for use in vending and amusement machines of the kind wherein an article to be vended or a prize is deposited into a chute to be guided to the front of the machine whereat it is removed by the operator.

The primary object of this invention is to provide a novel discharge chute wherein surreptitious removal of articles from the machine is prevented.

Another object is to provide a discharge chute having a door at the discharge end thereof adapted to be moved from closing position and having another door for closing the chute when the first door is moved to discharge position.

Other and further objects will be apparent from the following description wherein reference is made to the accompanying drawings in which

Fig. 1 is a perspective view illustrating a discharge chute embodying my invention;

Fig. 2 is a vertical sectional view taken substantially on the line 2—2 of Fig. 1 and drawn to a reduced scale;

Fig. 3 is a vertical sectional view of a modified form of the invention and taken substantially on the line 3—3 of Fig. 4; and

Fig. 4 is a sectional front view taken substantially on the line 4—4 of Fig. 3.

The embodiment of my invention illustrated in Figs. 1 and 2 is adapted to be used in connection with a vending machine embodying a front wall 5 having an opening through which the discharge end 6 of my novel and improved discharge chute extends, the lower wall of the discharge end providing a tray 7 forwardly of the front wall 5 into which the discharged articles are eventually passed to be removed from the machine. The upper portion of the opening is closed by a transparent plate 8 held in position by a frame 9. A horizontally disposed door 10 is fast on a shaft 11 journaled in the side walls of the discharge chute inwardly of the discharge end thereof. At one end of the shaft 11 there is a hub 12 and unitary with the hub is an arm 13 to the outer end of which one end of a spring 14 is secured, the opposite end of the spring being connected to the spring anchor 15 fast on the side wall of the discharge chute. The spring 14 acts through the arm 13, hub 12 and shaft 11 to yieldingly hold the door 10 in a horizontal position across the discharge chute whereby articles moving along the inclined lower wall 16 of the chute move onto the upper surface of the door 10. The spring 14 holds the forward edge of the door 10 in engagement with the lower rail of the frame 9 and articles moving onto the upper surface of the door 10 may be viewed through the glass plate 8. A thumb portion 17 is provided along the forward edge of the door 10 and by grasping this portion the door may be pivoted against the action of the spring 14 whereby articles may be discharged therefrom into the tray 7. Adjacent the upper end of the inclined bottom wall 16 in the side wall of the discharge chute is an opening 18 and a suitable conduit 19 opens into this opening 18. The articles to be vended are deposited in the conduit 19 and are passed through this conduit and the opening 18 onto the wall 16 to move out onto the door 10. When the arrangement such as the foregoing is provided, it has been found that unscrupulous persons may pivot the door 10 from its normal position illustrated in full lines in Fig. 1 to the discharge position illustrated in broken lines in said figure, and then extend the hand and arm through the discharge chute and conduit 19 to thereby surreptitiously remove articles to be vended. To prevent this, I provide a door 20 which is adapted to be moved into position to close the opening 18 at the time the door 10 is moved into its open position. The door 20 is fast to a member 21 pivotally mounted at 22 of the side wall of the discharge chute. On the member 21 is a lug 23 to which one end of a spring 24 is secured, the opposite end of the spring being fast to a spring anchor 25 on the side wall of the discharge chute. The spring member 24 so acts on the member 21 that the door 20 is held in the full line position of Fig. 1 whereat it engages the spring anchor 25 to limit the action of the spring 24. On the member 21 there is a cam surface 26. Extending from the hub 12 substantially at right angles to the arm 13 is an arm 27 having a smooth quadrant 28 at the outer end thereof. The quadrant 28 bears against the cam surface 26. Thus when the door 10 is pivoted from the full line position toward the broken line position of Fig. 1, the shaft 11 is turned and consequently the hub 12 and the arm 13 are turned. The arm 27 is also turned and the quadrant 28 acts on the cam surface 26 to turn the member 21 about its pivot 22 whereby the door 20 is moved immediately into the broken line position of Fig. 1 where it closes the opening 18. This occurs in the initial movement of the door 10 and during the remainder of the movement of the door toward open position, shown in broken lines in Fig. 1, the surface of the quadrant 28 rides freely over the cam surface 26 and the door 20 is retained in closing

position. Thus whenever the door 10 is moved from closing position in the discharge chute into such a position that articles are discharged therefrom, the door 20 is moved into position to close the opening through which the articles pass to move into the chute. Conversely, when the door 10 is in chute closing position, the door 20 is moved from position whereat it closes the opening 18 so that articles moving through the conduit 19 may pass through the opening 18 into the discharge chute. Whenever the door 10 is moved from closing position, the springs 14 and 24 are tensioned and, when this door is released, the springs serve to move the doors back into the full line positions of Fig. 1 which are the normal positions of these doors, the door 20 not moving from closing position until the door 10 is quite close to its closing position, shown in full lines in Fig. 1. It is therefore apparent that one or the other of the doors is always in position to close the discharge chute and in this way surreptitious removal of articles from the machine is prevented and this is particularly true since the door 20 moves into closing position upon the initial movement of the door 10 from closing position.

In Figs. 3 and 4 I have shown a modified form of construction for my discharge chute and herein 29 indicates the frame of the machine which has a horizontal partition 30 therein on which the articles to be vended, indicated by 31, are arranged. In the partition 30 there is an opening 32 and the upper end of the intermediate portion 33 of my discharge chute is provided with a flange 34 which is secured to the lower side of the partition 30 about the opening 32. Projecting upwardly from the partition 30 adjacent one edge of the opening 32 is a bracket 35 and connected thereto to extend about the opening 32 is the conduit or receiving portion 36 of my improved discharge chute which leads to the opening 32. Suitable means, for example such as that disclosed in the application of John F. Meyer, Serial No. 587,295, filed January 18, 1932, may be used to pick up the articles 31 and deposit them in the receiving portion 36 of my discharge chute and the articles pass through this discharge portion and the intermediate portion 33 to the discharge portion 37. The discharge portion 37 has flanges 38 along the front edges thereof which are secured to the front wall 39 of the machine and the discharge portion has, at the lower end thereof, a tray 40 which projects through and beyond an opening in the wall 39. The upper section of the front end of the discharge portion 37 is closed by a transparent plate, having the same utility as the plate 8, and it is held in position by a frame 41 similar to the frame 9. A shaft 42 is journaled in the side walls of the discharge portion 37 and a discharge door 43 is fast thereon to extend across the discharge portion to receive articles moving from the intermediate portion 33. A handle member 44 is provided on the front edge of the door 43 and by grasping this handle the door may be pivoted from closing position in the discharge portion 37 shown in full lines in Fig. 3 into the broken line position of Fig. 3 whereby any articles deposited thereon will slide therefrom into the tray 40 and the operator may then remove the articles. At one end of the shaft 42 is an arm 45 to the free end of which one end of a link 46 is pivotally connected. The opposite end of the link 46 is connected to the arm 47 of the substantially V-shaped connecting member generally indicated by 48 which is pivotally mounted at 49 on a wall of the frame 29. Secured to the free end of the arm 50 of the member 48 is a spring 51 which is likewise fast to the frame of the machine. The spring 51 acts on the member 48 and tends to pivot it in a clockwise direction as viewed in Fig. 3 and this action is transmitted through the link 46 to the arm 45 whereby the door 43 is held in closing position, illustrated in full lines in Fig. 3. To prevent the surreptitious removal of the articles 31 from the platform 30 when the door 44 is moved from closing position, a door 52 is provided which is fast on a shaft 53 mounted in the side members of the receiving portion 36. At one end of the shaft 53 is an arm 54 to the free end of which a link 55 is connected, said link also being connected to the free end of the arm 50. The spring 51 acts through the link 55 and arm 54 to hold the doors 52 in the full line position of Fig. 3 whereat it extends through the opening 32 and serves as a guide to direct the articles into the intermediate portion 33. When, however, the door 43 is pivoted from closing position illustrated in full lines into discharging position shown in broken lines in Fig. 3, the arm 45, link 46 and arm 47 are moved into the broken line positions and at this same time, the arm 50, link 55 and arm 54 are likewise moved into the broken line positions whereby the door 52 is moved into position to close the receiving portion 36, the door 52 at this time assuming the broken line position of Fig. 3. When the handle 44 is released, the spring 51 acts to reposition the doors 52 and 44 in the full line position of Fig. 3.

By referring to Fig. 4, it may be seen that the receiving and discharge portions of the discharge chute are out of alinement with each other and the means for causing simultaneous operation of the doors 43 and 52 are arranged intermediate the positions of the end portions of the chute. In the arrangement shown in Figs. 3 and 4, the doors are likewise arranged so that when one is in closing position the other is in open position and in this way access to the articles through the chute is prevented.

Selected embodiments of the invention are shown and described but it is to be understood that these are capable of variation and modification and I therefore do not wish to be limited to the precise details set forth but desire to avail myself of such changes and alterations as fall within the purview of the following claims:

I claim:

1. A discharge chute for a vending machine having a dispensing tray at the discharge end thereof, a door extending across said chute and closing the same and adapted to receive articles moving through said chute, means supporting said door whereby said door may be moved from closing position to permit discharge of the articles received thereby onto said dispensing tray, said discharge chute having an opening at the receiving end thereof, a door for closing said opening, a member pivotally supporting said last-named door, means acting on said member and normally holding said last named door in open position, a cam surface on said member, and a quadrant operable with the supporting means for the door at the discharge end and cooperating with said cam surface to move the door at the receiving end into position to close the opening at said receiving end when said door at the discharge end is moved into position to discharge articles onto said tray.

2. A discharge chute for a vending machine having a dispensing tray at the discharge end thereof, a door extending across said chute and closing the same and adapted to receive articles moving through said chute, means supporting said door whereby said door may be moved from closing position to permit discharge of the articles received thereby onto said dispensing tray, an arm on the supporting means, a spring acting on said arm to hold said door in closing position, said discharge chute having an opening at the receiving end thereof, another door for closing said opening, a member pivotally mounted on said discharge chute and supporting said last named door and having a cam surface thereon, means mounted on said supporting means and having a quadrant thereon adapted to cooperate with said cam surface to move said last named door into position to close said opening at the receiving end of said discharge chute when said door at the discharge end of said chute is moved into position to discharge articles onto said tray, and a spring connected to said member and normally holding the door at the receiving end in open position.

3. In a vending machine, a delivery chute having a dispensing end extending exteriorly of the machine and a receiving end located within the machine, a conduit leading to the receiving end of said chute, a collecting door pivotally mounted in the chute at the dispensing end thereof and normally positioned to close said chute, a blocking door for blocking communication between said conduit and said chute and normally disposed out of blocking position, an operated member connected to the blocking door, and an operating member connected to the collecting door and adapted to have movement imparted thereto when force is applied on the collecting door to pivot it from chute closing position, said operated member and said operating member including cooperating parts adapted to move the blocking door into blocking position in the initial movement of the collecting door from chute closing position and adapted to afford movement of the operating member relative to the operated member during the remainder of the movement of the collecting door from chute closing position whereby the blocking door is held in blocking position when the collecting door is out of chute closing position.

4. In a vending machine, a delivery chute having a dispensing end extending exteriorly of the machine and a receiving end located within the machine, a conduit leading to the receiving end of said chute, a collecting door pivotally mounted in the chute at the dispensing end thereof and normally positioned to close said chute, a blocking door for blocking communication between said conduit and said chute and normally disposed out of blocking position, an operated member connected to the blocking door, an operating member connected to the collecting door, means on said collecting door on which manual force may be applied to move the collecting door out of chute closing position and to impart movement to the operating member, said operated member and said operating member including cooperating parts adapted to move the blocking door into blocking position in the initial movement of the collecting door from chute closing position and adapted to afford movement of the operating member relative to the movement of the operated member during the remainder of the movement of the collecting door from chute closing position whereby the blocking door is held in blocking position when the collecting door is out of chute closing position, and means for returning the collecting door to chute closing position and for moving the blocking door out of blocking position when force is relieved from the means on said collecting door on which the force is applied.

VICTOR NEUMANN.