(12) INTERNATIONAL APPLICATION PUBLISHED UNDER THE PATENT COOPERATION TREATY (PCT)

(19) World Intellectual Property Organization
International Bureau

(43) International Publication Date
11 October 2012 (11.10.2012)

WIPO | PCT

(10) International Publication Number
WO 2012/138663 A3

(51) **International Patent Classification**:
*A61B 5/0205* (2006.01)

(21) **International Application Number**:
PCT/US2012/032014

(22) **International Filing Date**:
3 April 2012 (03.04.2012)

(25) **Filing Language**: English

(26) **Publication Language**: English

(30) **Priority Data**:

| | | |
|---|---|---|
| 13/079,219 | 4 April 2011 (04.04.2011) | US |
| 13/169,603 | 27 June 2011 (27.06.2011) | US |
| 61/570,109 | 13 December 2011 (13.12.2011) | US |
| 61/589,084 | 20 January 2012 (20.01.2012) | US |

(71) **Applicant** *(for all designated States except US)*: **INTEGRATED MONITORING SYSTEMS, LLC** [US/US]; 2287 South Coors Court, Lakewood, CO 80228 (US).

(72) **Inventors**: **PHILLIPS, Brian, K.**; 2287 Coors Court, Lakewood, CO 80220 (US). **WILSON, Geoffrey, A.**; 292 Roberts Creek Road, Roseburg, OR 97471 (US).

(74) **Agents**: **CARSON, W., Scott** et al.; Dorr, Carson & Birney, PC, 5299 DTC Boulevard, Ste 340, Greenwood Village, CO 80111 (US).

(81) **Designated States** *(unless otherwise indicated, for every kind of national protection available)*: AE, AG, AL, AM, AO, AT, AU, AZ, BA, BB, BG, BH, BR, BW, BY, BZ, CA, CH, CL, CN, CO, CR, CU, CZ, DE, DK, DM, DO, DZ, EC, EE, EG, ES, FI, GB, GD, GE, GH, GM, GT, HN, HR, HU, ID, IL, IN, IS, JP, KE, KG, KM, KN, KP, KR, KZ, LA, LC, LK, LR, LS, LT, LU, LY, MA, MD, ME, MG, MK, MN, MW, MX, MY, MZ, NA, NG, NI, NO, NZ, OM, PE, PG, PH, PL, PT, QA, RO, RS, RU, RW, SC, SD, SE, SG, SK, SL, SM, ST, SV, SY, TH, TJ, TM, TN, TR, TT, TZ, UA, UG, US, UZ, VC, VN, ZA, ZM, ZW.

(84) **Designated States** *(unless otherwise indicated, for every kind of regional protection available)*: ARIPO (BW, GH, GM, KE, LR, LS, MW, MZ, NA, RW, SD, SL, SZ, TZ, UG, ZM, ZW), Eurasian (AM, AZ, BY, KG, KZ, MD, RU, TJ, TM), European (AL, AT, BE, BG, CH, CY, CZ, DE, DK, EE, ES, FI, FR, GB, GR, HR, HU, IE, IS, IT, LT, LU, LV, MC, MK, MT, NL, NO, PL, PT, RO, RS, SE, SI, SK, SM, TR), OAPI (BF, BJ, CF, CG, CI, CM, GA, GN, GQ, GW, ML, MR, NE, SN, TD, TG).

**Published**:

— *with international search report (Art. 21(3))*

(88) **Date of publication of the international search report**:
1 May 2014

(54) **Title**: SYSTEM FOR BIOMETRIC IDENTITY CONFIRMATION

(57) **Abstract**: A portable testing unit (10) for biometric identity confirmation includes a housing with an orifice (15) to receive a breath sample from the test subject, a spirometric sensor (20), and a pulse sensor (24) adjacent to the orifice (15). A processor (12) analyzes spirometric data from the spirometric sensor (20) and simultaneous pulse wave data from the pulse sensor (24) during the breath sample, together with stored subject characterization data for a known subject to confirm whether the identity of the test subject matches the known subject. A communications link (16) enables the processor (12) to communicate to an external station whether the identity of the test subject matches the known subject. For example, this system can be used to control access to a secure facility or computer, authenticate the identity of a party in a financial transaction, or confirm the identity of the subject of an alcohol monitoring test.

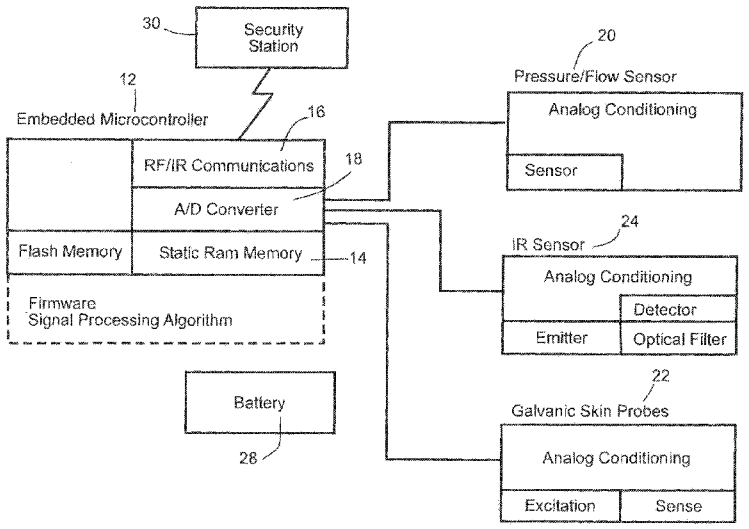


*Fig. 2*

WO 2012/138663 A3

# INTERNATIONAL SEARCH REPORT

International application No.
PCT/US2012/032014

A. CLASSIFICATION OF SUBJECT MATTER
IPC(8) - A61B 5/0205 (2012.01)
USPC - 382/115
According to International Patent Classification (IPC) or to both national classification and IPC

B. FIELDS SEARCHED

Minimum documentation searched (classification system followed by classification symbols)
IPC(8) - A61B5/00, 5/02, 5/0205, 5/0235 (2012.01)
USPC - 382/115, 116, 190, 191

Documentation searched other than minimum documentation to the extent that such documents are included in the fields searched

Electronic data base consulted during the international search (name of data base and, where practicable, search terms used)
PatBase, Orbit.com, Google Patents, Engineering Village

C. DOCUMENTS CONSIDERED TO BE RELEVANT

| Category* | Citation of document, with indication, where appropriate, of the relevant passages | Relevant to claim No. |
|---|---|---|
| X | US 2003/0135097 A1 (WIEDERHOLD et al) 17 July 2003 (17.07.2003) entire document | 1, 3-6, 17-19 |
| Y | | 2, 7-16, 20-43 |
| Y | US 2010/0108425 A1 (CRESPO et al) 06 May 2010 (06.05.2010) entire document | 2, 7-16, 20-43 |
| Y | US 2011/0009762 A1 (EICHLER et al) 13 January 2011 (13.01.2011) entire document | 24, 26-28, 35, 40-42 |
| Y | US 2009/0253130 A1 (YOO) 08 October 2009 (08.10.2009) entire document | 43 |
| A | US 2007/0177770 A1 (DERCHAK et al) 02 August 2007 (02.08.2007) entire document | 1-43 |

☐ Further documents are listed in the continuation of Box C. ☐

* Special categories of cited documents:
"A" document defining the general state of the art which is not considered to be of particular relevance
"E" earlier application or patent but published on or after the international filing date
"L" document which may throw doubts on priority claim(s) or which is cited to establish the publication date of another citation or other special reason (as specified)
"O" document referring to an oral disclosure, use, exhibition or other means
"P" document published prior to the international filing date but later than the priority date claimed
"T" later document published after the international filing date or priority date and not in conflict with the application but cited to understand the principle or theory underlying the invention
"X" document of particular relevance; the claimed invention cannot be considered novel or cannot be considered to involve an inventive step when the document is taken alone
"Y" document of particular relevance; the claimed invention cannot be considered to involve an inventive step when the document is combined with one or more other such documents, such combination being obvious to a person skilled in the art
"&" document member of the same patent family

| Date of the actual completion of the international search | Date of mailing of the international search report |
|---|---|
| 17 July 2012 | 27 JUL 2012 |
| Name and mailing address of the ISA/US<br>Mail Stop PCT, Attn: ISA/US, Commissioner for Patents<br>P.O. Box 1450, Alexandria, Virginia 22313-1450<br>Facsimile No. 571-273-3201 | Authorized officer:<br>Blaine R. Copenheaver<br>PCT Helpdesk: 571-272-4300<br>PCT OSP: 571-272-7774 |

Form PCT/ISA/210 (second sheet) (July 2009)