United States Patent [19]

Krolopp

[11] **Des. 246,781**

[45] ** **Dec. 27, 1977**

[54] **MICROPHONE OR SIMILAR ARTICLE**

[75] Inventor: **Rudolph William Krolopp**, Palatine, Ill.

[73] Assignee: **Motorola, Inc.**, Schaumburg, Ill.

[**] Term: **14 Years**

[21] Appl. No.: **699,918**

[22] Filed: **June 25, 1976**

[51] **Int. Cl.** ..... **D14—01**
[52] **U.S. Cl.** **D14/12**
[58] **Field of Search** ..... D26/14 B, 14 J; 179/179, 167, 115 R, 115.5 R, 122, 123; D14/12

[56] **References Cited**

U.S. PATENT DOCUMENTS

3,365,200	1/1968	Dollenmayer	D26/14 B
3,548,119	12/1970	Ramsey	179/167
3,586,807	6/1971	Guttinger	179/167
3,728,670	4/1973	Rosauer	179/179 X

Primary Examiner—Bernard Ansher
Attorney, Agent, or Firm—James W. Gillman

[57] **CLAIM**

The ornamental design for a microphone or similar article, substantially as shown and described.

DESCRIPTION

FIG. **1** is a top perspective view of a microphone or similar article showing my new design;
FIG. **2** is a side elevation thereof;
FIG. **3** is a bottom plan view thereof;
FIG. **4** is a rear end elevation thereof; and
FIG. **5** is a top perspective view of a modified embodiment of the microphone illustrated in FIG. **1**.

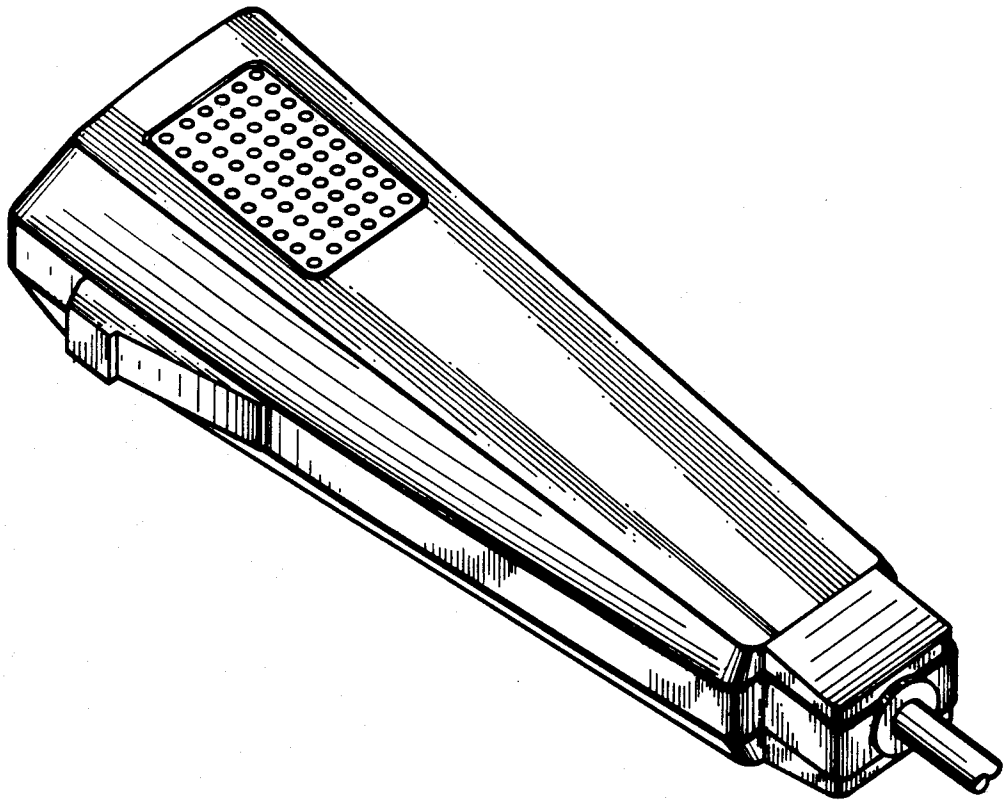

Fig. 1

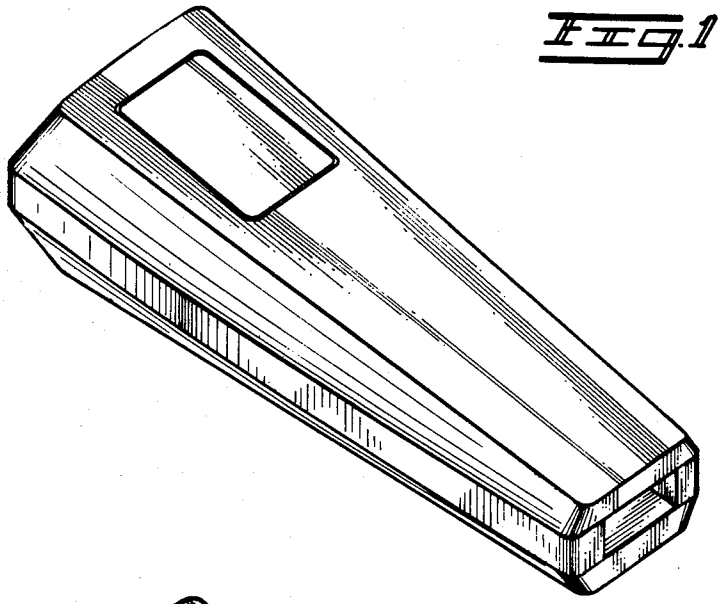

Fig. 2

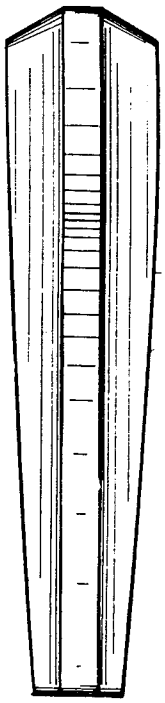

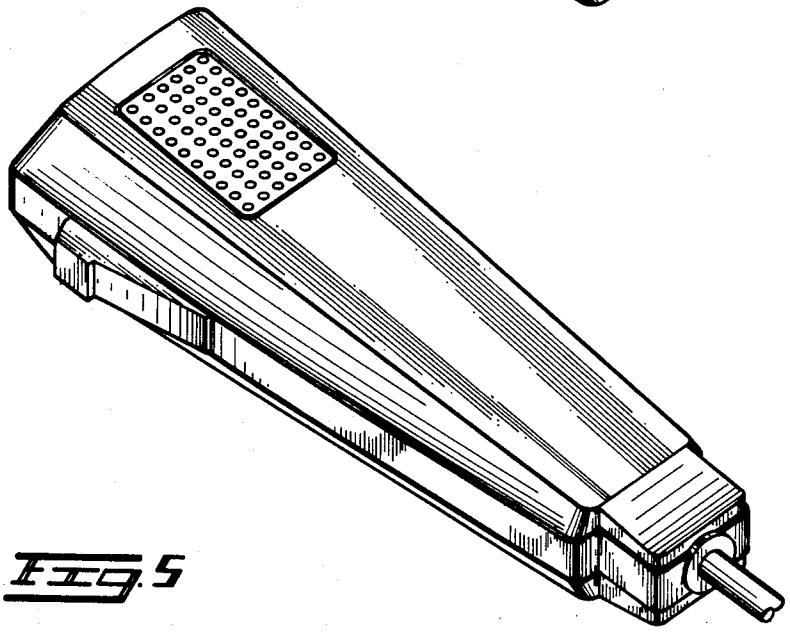

Fig. 5

Fig. 3

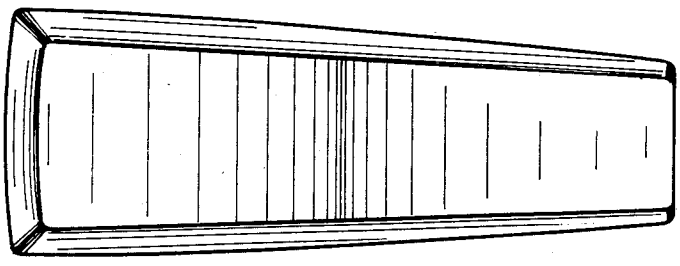

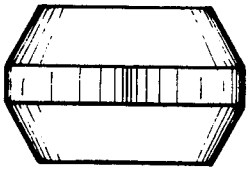

Fig. 4