No. 885,410. PATENTED APR. 21, 1908.

B. J. WELLER.

RAZOR.

APPLICATION FILED SEPT. 5, 1907.

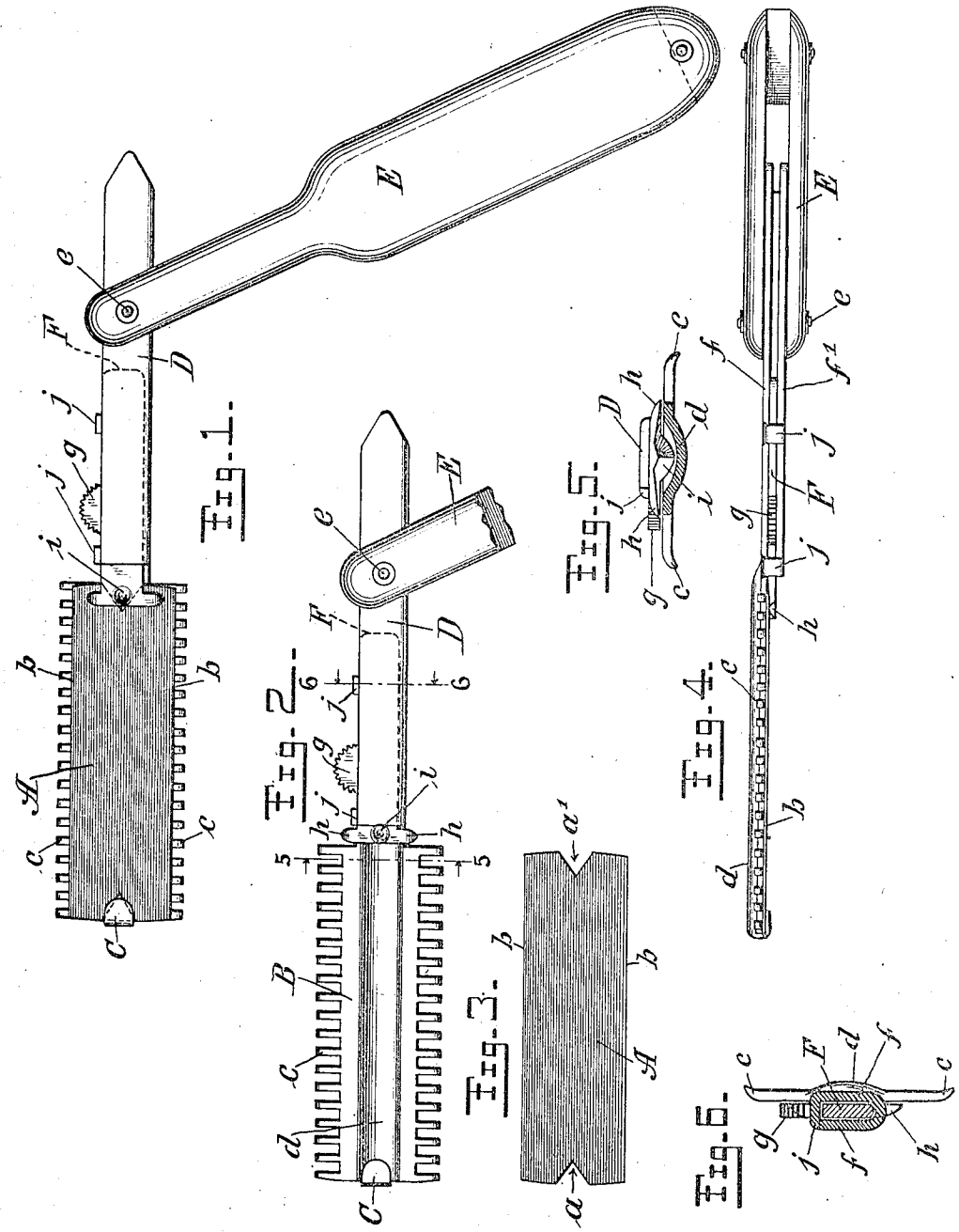

Witnesses:
G. V. Rasmussen
John Lotka

Inventor
Barnett J. Weller
By his Attorneys
Briesen & Knauth

UNITED STATES PATENT OFFICE.

BARNETT J. WELLER, OF NEW YORK, N. Y.

RAZOR.

No. 885,410. Specification of Letters Patent. Patented April 21, 1908.

Application filed September 5, 1907. Serial No. 391,501.

To all whom it may concern:

Be it known that I, BARNETT J. WELLER, a citizen of the United States, residing at 609 West One Hundred and Fifteenth street, in the city and county of New York and State of New York, have invented a new and useful Improvement in Razors, of which the following is a specification.

My invention relates to a safety razor, and particularly to means for holding an interchangeable blade against a guard member.

In the drawings Figure 1 is a view illustrating my improved razor with all the parts assembled; Fig. 2 is a similar view with the blade removed, the sliding catch thrown back, and the handle broken away; Fig. 3 is a view of the blade; Fig. 4 is a side view of my razor with all the parts assembled; Fig. 5 is an enlarged cross-sectional view on line 5—5 of Fig. 2; and Fig. 6 is an enlarged cross-sectional view on line 6—6 of Fig. 2.

In the drawings A is a razor blade, provided with two oppositely located cutting edges, *b*, *b*, and two oppositely located notches *a a'*. The guard plate B is provided with the usual guard teeth *c*, and also with a strengthening groove *d* extending, in the razor shown, the entire length of the guard plate. At its outer end the guard plate is provided with a hook or holding member C, preferably integral therewith.

The guard plate B is held by, and preferably integral with, a shank D, pivoted at *e* to the handle E. The handle may be of any convenient shape but is preferably of such shape and size as to cover or protect the guard teeth when the razor is closed. The shank D is preferably U-shaped in cross-section, being constructed of two parallel plates *f f'*, joined at their lower edges by a membrane, as shown in Fig. 6. Between these plates is held a sliding clamp member F, preferably provided with a finger piece *g*, two laterally extending lugs *h h*, and a downwardly extending projection *i* preferably formed by depressing the portion of the member F which lies between the lugs *h h*. To prevent the sliding clamp member F from falling out of the shank D small lugs *j j* are provided, preferably made integral with one of the plates *f f'*.

The operation of my device is as follows: When the parts of the razor are in the position shown in Fig. 2 the blade A is laid upon the guard plate between the hook C and the sliding clamp member F, in such a manner that the sides of the notch *a* embrace the sides of the hook C, and the guard teeth *c* project substantially an equal distance beyond the cutting edges, *b b*. The sliding clamp member F is then pushed forward into the position shown in Fig. 1, the projection *i* traveling in the groove *d* abutting against the edges of the notch *a'*, and the lugs *h h* riding onto the blade A. The blade is thus centered and firmly held in place on the guard plate by the hook C and the member F.

The shank D with the lugs *j j*, and the guard plate B with the hook C are preferably all integral and stamped out of one piece of metal. The sliding clamp member F is preferably stamped out of one piece of metal. Thus the entire blade holding device may be made of but two pieces of metal, being therefore easily and cheaply manufactured and not liable to get out of order.

Of course, the handle E may be entirely omitted, or other holding means substituted therefor, or the construction of my device changed in detail, without departing from the spirit of my invention.

I claim:

1. In a razor, the combination of a guard plate provided with a groove, holding means carried at one end thereof, a blade adapted to be engaged at one end by said holding means and having a notch at its other end, and a sliding clamp member carried at the other end of the guard plate adapted to slide over the other end of said blade, the clamping member being provided with a downward projection adapted to slide within said groove and to abut against the edges of said notch, substantially as described.

2. In a razor, the combination of a guard plate, a shank comprising two parallel plates carried by the guard plate, a clamp member slidably carried between said plates, holding means carried by the guard plate, and a blade adapted to be held in place on the guard plate between the clamping member and the holding means, substantially as described.

In testimony whereof I have hereunto set my hand this 3d day of September, 1907.

BARNETT J. WELLER.

Witnesses:
MAURICE MEYER,
ARTHUR C. KAHN.