Dec. 9, 1941. S. VERNET 2,265,586

CONTROL DEVICE

Filed Aug. 11, 1938

FIG. 1

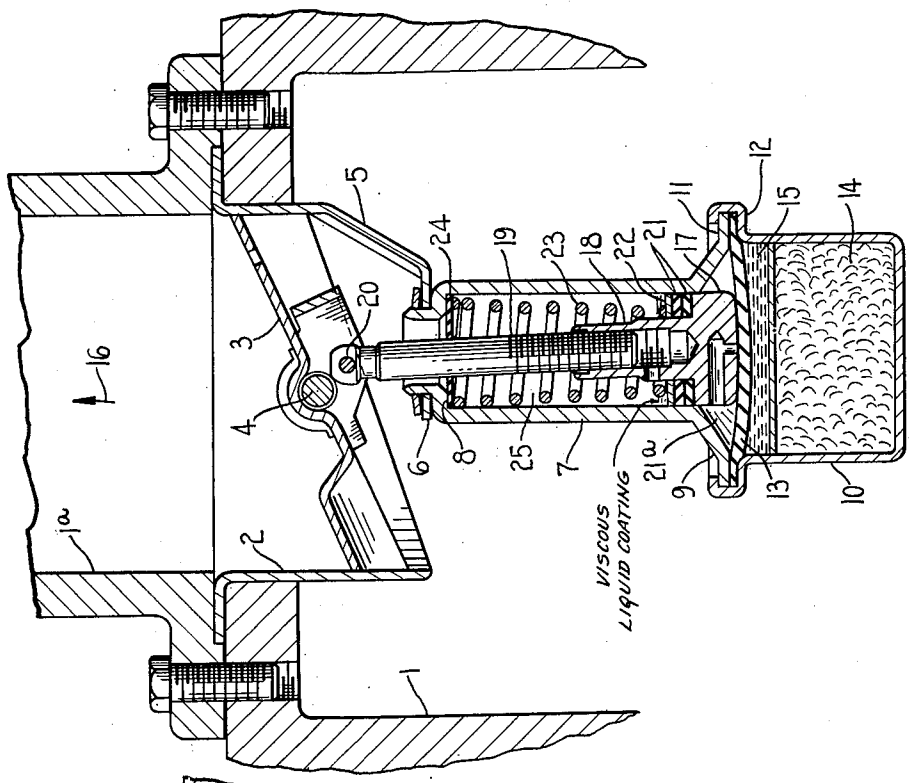

FIG. 2

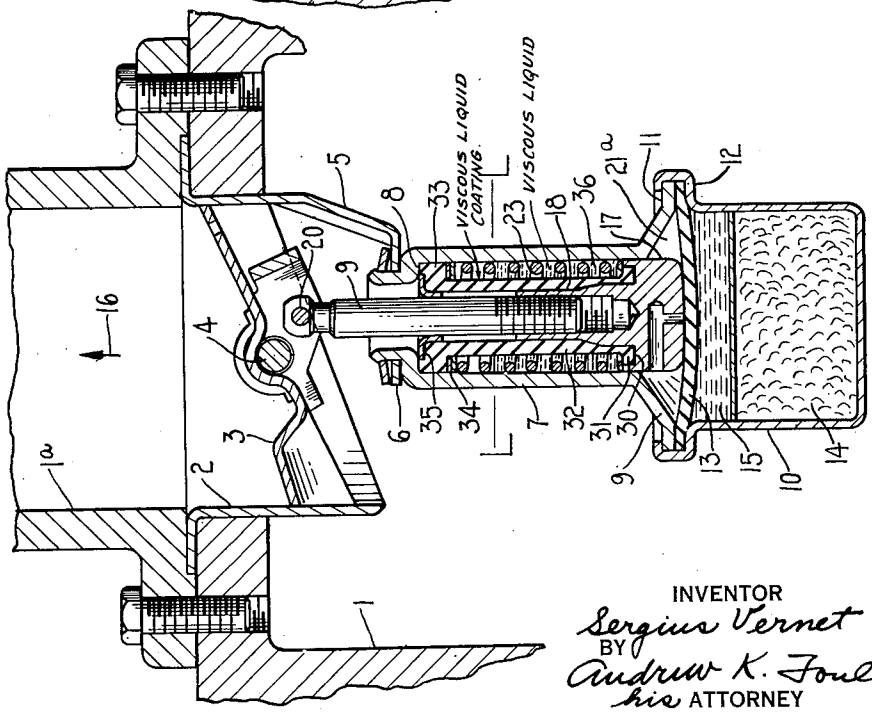

INVENTOR
Sergius Vernet
BY
Andrew K. Fowds
his ATTORNEY

Patented Dec. 9, 1941 2,265,586

UNITED STATES PATENT OFFICE

2,265,586

CONTROL DEVICE

Sergius Vernet, Yellow Springs, Ohio, assignor to Vernay Patents Company, Yellow Springs, Ohio, a corporation of Delaware

Application August 11, 1938, Serial No. 224,417

15 Claims. (Cl. 297—3)

My invention relates to new and useful improvements in control devices and more particularly to diaphragm actuated devices.

An object of my invention is to provide means to reduce and overcome the rate at which liquids pass through a diaphragm due to the effects of osmosis or permeability or both effects.

Another object is to maintain the diaphragm free from contact with a fluid medium which will pass therethrough by osmosis.

The invention consists in the novel means for overcoming osmosis, to be more fully described hereinafter and the novelty of which will be particularly pointed out and distinctly claimed.

In the accompanying drawing, to be taken as a part of this specification, I have fully and clearly illustrated two constructions embodying my invention, in which drawing—

Figure 1 is a view in longitudinal central section of a thermostatically operated flow controlling valve embodying my invention, and

Fig. 2 is a similar view showing another valve construction embodying my invention.

Referring to the drawing by characters of reference, 1 designates a conduit or casing such as a portion of a cooling water jacket of an internal combustion engine having an outlet portion 1a. Positioned in the conduit is a valve housing 2 of tubular cylindrical form in which is positioned a valve plate or member 3 supported for rotation on a shaft 4. Extending downward from the lower edge of the housing 2 is a plurality of supporting arms 5 carrying an apertured plate portion 6. Secured in the aperture of portion 6 is a tubular housing member 7 having adjacent its upper end an internal annular downward facing shoulder 8 and having its lower end terminating in a downward flaring surrounding flange 9. Clamped to the flange 9 is a cup-like container or chambered element 10 concentric with the housing member 7. The flange 9 and container 10 are provided with flat annular opposed portions 11, 12 respectively, between which is tightly secured the marginal portion of a circular diaphragm 13. The space within container 10 is closed and sealed by the diaphragm 13 which is of flexible elastic material such as rubber or "Neoprene" or other rubber-like or elastic material which is of a permeable or semi-permeable structure or nature such that molecules of some liquids can pass through it, or such as would permit osmosis to occur when mutually soluble fluids of different vapor pressures are on and contacting the opposite sides thereof. The container 10 is partly filled with a temperature responsive expansible-contractible pellet or element 14 which may comprise "Neoprene" and diphenyl in solution, the solution being intimately mixed with powdered or flaked copper. The remaining space in the container 10 is filled with a substantially incompressible pressure conveying or transmitting medium which may be a liquid, such as water or alcohol, designated 15.

The conduit 1 is filled with a fluid medium which flows in the direction of the arrow 16 by gravity or forced circulation and might be a liquid such as the liquid 15 or may be an anti-freeze solution or other liquid mutually soluble in and having a different vapor pressure from the liquid in container 10. Seated on the diaphragm 13 is a piston member 17 which is guided by and slidably fits in the tubular member 7 and has an upward extending, hollow, internally screw-threaded shank 18. Adjustably threaded into the shank 18 is a rod 19 which at its upper end is pivoted by a pin 20 to the valve plate 3 eccentric of shaft 4 so that the piston member 17 and rod 19 together provide a thrust member for transmitting movement of the diaphragm to the valve plate 3.

Surrounding the shank 18 and seating on the head of the piston member 17 which provides an upward facing annular shoulder, is a plurality of sealing rings or washers 21 which are of rubber or "Neoprene" and provide between them and the top surface of the diaphragm, a sealed air space or pocket 21a. These rings 21 must fit tightly against the inside surface of member 7 and it is for this reason that a plurality of rings is employed so as to overcome any eccentricity of the center ring apertures which fit the shank, or any out-of-roundness of the rings at their periphery. Overlying the rings 21 is a metal compression ring or washer 22 which substantially fits the annular space between the shank 18 and the member 7 and which serves as a spring seat. Within the member 7 and surrounding the thrust member is a helical coil spring 23 which acts against the shoulder 8 and is held thereby under compression against the spring seat ring 22 so that the washers 21 are compressed and held under a considerable constant pressure, rendering them more dense and expanding them laterally or radially against the shank 18 and the wall of member 7. The upper end of spring 23 bears against a ring or washer 24 of rubber or "Neoprene" which is held thereby against the shoulder 8 and slidably receives the rod 19. The ring 24 closes the spring chamber 25 against admission of dirt and rust particles although it permits the entrance there-

into of the fluid medium or anti-freeze solution in conduit 1 while preventing free circulation of the anti-freeze solution into and from chamber 25. A quantity of lubricant which is substantially insoluble in both the circulating or anti-freeze solution and the liquid in container 10 is placed in chamber 25 so that there will be no sticking of the washers or rings 21 against the wall of member 7. The preferable lubricant may be described as a soft, very viscous material which is a high molecular weight hydrocarbon polymer known on the market as "Vistanex 3000" sold by Advance Solvents and Chemical Corp., of New York, N. Y. Although the washers 21 are of a material subject to osmosis, I have found that osmosis and loss of liquid due to permeability are practically eliminated by using a section of the material under considerable compression and exposing a minimum area or surface to the action of the different fluids. The compression apparently reduces the size of the pores in the material so that the molecules of the separated fluids are unable to pass through it. This effect resulting from compression of the material should not be confused with the necessity of maintaining a tight joint or sealing fit between the washer and the side walls of the chamber.

Referring to Fig. 2, the construction is the same as above except for the following: The head of the piston member 17 has an annular recess 30 in its upper face in which is received the lateral end flange 31 of a tubular sleeve member 32 which is positioned within the spring 23. The lower end of the spring 23 therefore acts to hold the flange 31 tightly in the recess 30. At its upper end, the sleeve member 32 has a lateral surrounding flange 33 which seats against the shoulder 8 and is held tightly thereagainst by the spring 23. An annular metal plate 34 is interposed between the spring 23 and the flange 33 to distribute the spring force and serve as a spring seat. Within the upper end of sleeve member 32 is a metal angle ring 35 which serves as a guide for and reciprocally fits the rod 9. In the spring space 36 within the tubular member 7 and surrounding the sleeve member 32 there is a quantity of liquid material to line L—L so that an air space or pocket is provided between the outer side or top surface of the diaphragm and the liquid in conduit 1. This liquid material, such for example as "Vistanex 3000," is insoluble in the fluid media of different vapor pressures and coats all of the exterior surface and flanges of the sleeve member. This liquid material serves to close the pores in the sleeve member and to seal the sleeve member so that osmosis is materially reduced.

The operation of a device of the construction shown in Fig. 1 is as follows: When the temperature of the fluid medium in conduit 1 and surrounding the container 10 increases to a predetermined degree, the element 14 will expand and acting on the liquid 15 will force the diaphragm upward or outward, lifting the piston member 17 against the force of spring 23 and opening the valve plate 3. Should any of the liquid in conduit 1 seep into the space 21a, then as the diaphragm is forced upward to engage the inner face of the flared wall 9, any liquid in space 21a will be forced past the washers 21 into the spring space 25 by the diaphragm and the pressure acting thereon which exceeds the pressure in conduit 1. This evacuation of space 21a upon each expansion of pellet 14 aids in overcoming osmosis, as the liquid from conduit 1 is thereby prevented from remaining in contact with the diaphragm. When the temperature of the fluid medium surrounding container 10 and in conduit 1 decreases, the element 14 will contract, permitting the spring 23 to move the piston member and diaphragm downward or inward, thereby opening the valve plate 3. During this outward or inward movement of the piston member, the washers 21 effectively seal the clearance between the piston member 17 and tubular member 7 against admission of fluid medium from conduit 1 to the diaphragm, or if by reason of the washers 21 failing to wipe the wall of member 7 dry, some liquid collects in space 21a, then upon outward movement, the diaphragm 13 will discharge the liquid therefrom as above described.

Referring to Fig. 2, the operation is substantially the same as described for Fig. 1, except that the seal is effected by the sleeve member 32 having its pores closed by the liquid material in chamber 36. In this form, the coated sleeve member materially reduces the rate of admission of liquid from conduit 1 to the diaphragm and thereby substantially overcomes osmostic action. By the use of the sealing means, such as washers 21 or the cooperating sleeve member 32 and its confined liquid material, the quantity of liquid in the container 10 remains constant so that the setting of the control device is unchanged, it being apparent that change in setting would occur if osmotic action or loss due to permeability were permitted either to increase or decrease the volume or charge of liquid in container 10.

It is also within the scope of my invention to overcome change in volume of the liquid in chamber 10 by utilizing a device such as shown in Fig. 2, but with the sleeve member 32 removed or eliminated. If then a diaphragm member permeable to the liquid 15 and subject to osmosis under the influence of the liquid in conduit 1 is employed, there will be transfer of liquid both from and into the container 10 so that the loss of liquid from container 10 by permeability of the diaphragm will be balanced by the increase of liquid by osmotic action from conduit 1. In lieu of utilizing this balancing counter transfer of liquids, tubular member 7 may be filled with a liquid insoluble in the liquid 15 and the liquid in conduit 1 and of a specific gravity such that it will remain in overlying contact with the top face of the diaphragm and not be displaced by the liquid in conduit 1. The height of the column of insoluble liquid supported on the diaphragm is such that any turbulence which occurs due to the reciprocation of the piston 17 will not be sufficient to allow particles of the liquid from conduit 1 to work their way into contact with the diaphragm member.

Although the constructions of Figs. 1 and 2 have been shown and described as devices for controlling liquid flow in cooling apparatus for internal combustion engines, it will be apparent that the medium surrounding the tubular member 7 and container 10 might be air or gas or a liquid of the same vapor pressure as the liquid 15. In either case there may be a change in setting of the thermostat due to loss of liquid 15 from container 10 by reason of the permeability of the diaphragm member when liquids having relatively small molecules are used, such for example as water or alcohol. This loss can be substantially eliminated or very materially reduced by using liquids having very large mole-

cules. It is also possible to accomplish this result by using in the container 10 liquids with high surface tension or by increasing the surface tension of the liquids. If desired, loss may be overcome by using a solution of an electrolyte which would yield hydrated ions.

It will thus be seen from the foregoing that change of liquid volume in container 10 may be avoided in a number of ways and irrespective of the relation between the vapor pressures or character of the medium on the outside of the diaphragm member or surrounding the container 10.

What I claim and desire to secure by Letters Patent of the United States is:

1. In a device of the character described, a chambered element having a wall opening and adapted to be positioned in a fluid medium of one vapor pressure, a fluid medium of a different vapor pressure contained in said element, a permeable diaphragm which would permit osmosis to occur and closing said opening, and a viscous material substantially insoluble in said fluid mediums and protecting said diaphragm from contact with one of said fluid mediums.

2. In a device of the character described, a chambered element containing a liquid of one vapor pressure, a flexible permeable diaphragm sealing the liquid in said element, a second liquid of a different vapor pressure on the opposite side of said diaphragm, and a sealing material having a viscous coating and spaced from and sealing said diaphragm from contact with one of said liquids to prevent the occurrence of osmosis.

3. In a device of the character described, a chambered element containing a liquid of one vapor pressure, a flexible permeable diaphragm sealing the liquid in said element, a second liquid of a different vapor pressure on the opposite side of said diaphragm, sealing means having a viscous coating and interposed between the diaphragm and the liquid of different vapor pressure to prevent osmosis, and means operable by said diaphragm to transmit movement of said diaphragm through said osmosis-preventing means, said last-named means being secured to said sealing means.

4. In a device of the character described, means to be actuated and adapted to be positioned in a fluid medium of one vapor pressure, a chambered element having a wall opening and containing a fluid medium of a different vapor pressure, a diaphragm subject to osmosis and closing said opening, said diaphragm being movable by pressure of the fluid medium in said element, a piston to transmit movement of said diaphragm to said means to be actuated, and sealing material movable with said piston and having a viscous coating to maintain said diaphragm free from contact with the fluid medium of said one vapor pressure so that osmosis will be substantially eliminated.

5. In a device of the character described, means to be actuated and adapted to be positioned in a fluid medium of one vapor pressure, a chambered element having a wall opening and containing a fluid medium of a different vapor pressure, a diaphragm subject to osmosis and closing said opening, said diaphragm being movable by pressure of the fluid medium in said element, means to transmit movement of said diaphragm to said means to be actuated, and a viscous liquid medium substantially insoluble in the fluid medium of said one vapor pressure and interposed between said diaphragm and the fluid medium of said one vapor pressure so that osmosis will be substantially eliminated.

6. In a device of the character described, means to be actuated and adapted to be positioned in a fluid medium of one vapor pressure, a chambered element having a wall opening and containing a fluid medium of a different vapor pressure, a diaphragm subject to osmosis and closing said opening, said diaphragm being movable by pressure of the fluid medium in said element, means to transmit movement of said diaphragm to said means to be actuated, a liquid medium substantially insoluble in the fluid medium of said one vapor pressure and interposed between said diaphragm and the fluid medium of said one vapor pressure so that osmosis will be substantially eliminated, and means confining the liquid medium against escape into the medium of said one vapor pressure.

7. In a device of the character described, means to be actuated and adapted to be positioned in a fluid medium of one vapor pressure, a chambered element having a wall opening and containing a fluid medium of a different vapor pressure, a diaphragm subject to osmosis and closing said opening, said diaphragm being movable by pressure of the fluid medium in said element, means to transmit movement of said diaphragm to said means to be actuated, and sealing material under pressure acting to maintain said diaphragm free from contact with the fluid medium of said one vapor pressure so that osmosis will be substantially eliminated.

8. In a device of the character described, a chambered element having a wall opening, a diaphragm subject to osmosis and closing said opening, a liquid contained in said element by and operable to move said diaphragm, a tubular member carried by said element and overlying said diaphragm, a thrust member guided in said tubular member and movable by said diaphragm, and viscous sealing material tending to maintain said diaphragm free from contact with a fluid medium of different vapor pressure than said liquid so that osmosis will be substantially eliminated.

9. In a device of the character described, a chambered element having a wall opening, a diaphragm subject to osmosis and closing said opening, a liquid confined in said element by and operable to move said diaphragm, a tubular member carried by said element and overlying said diaphragm, a thrust member guided in said tubular member and movable by said diaphragm, and sealing material under pressure and closing the clearance space between said thrust member and said tubular member thereby to maintain said diaphragm free from contact with a fluid medium of different vapor pressure than said liquid so that osmosis will be substantially eliminated.

10. In a device of the character described, a chambered element having a wall opening, a diaphragm subject to osmosis and closing said opening, a liquid confined in said element by and operable to move said diaphragm, a tubular member carried by said element and overlying said diaphragm, a thrust member guided in said tubular member and movable by said diaphragm, one of said members having a marginal shoulder, sealing material seating on said shoulder and having edge contact with the other of said members, and means compressing said material thereby to maintain said diaphragm free from contact with a fluid medium of different vapor pressure

than said liquid so that osmosis will be substantially eliminated.

11. In a device of the character described, a chambered element having a wall opening, a diaphragm subject to osmosis and closing said opening, a liquid confined in said element by and operable to move said diaphragm, a tubular member carried by said element and overlying said diaphragm, a thrust member guided in said tubular member and movable by said diaphragm, a tubular elastic member within said tubular member and surrounding said thrust member, said elastic member having tight sealing engagement at one end with said first-named tubular member and at its other end with said thrust member, and a liquid within said first-named tubular member and coating the surface of said elastic member between said elastic member and said diaphragm, said second-named liquid being substantially insoluble in a fluid medium of different vapor pressure than said first-named liquid so that osmosis will be substantially eliminated.

12. In a device of the character described, a chambered element having a wall opening, a tubular cylinder extending from said opening, a force transmitting liquid in said element, a diaphragm subject to osmosis and closing said opening, a piston in said cylinder and engaging said diaphragm for movement thereby, a plunger extending from said piston and out of said cylinder, a shoulder in said cylinder and facing said piston, a spring surrounding said plunger and having one end acting against said shoulder and its other end acting against said piston, a flexible closure member apertured to receive said plunger and held against said shoulder by said spring, and a viscous sealing material between said flexible member and said diaphragm to keep said diaphragm free from a fluid medium surrounding said cylinder so that osmotic pressure can not set up through said diaphragm.

13. In a device of the character described, a chambered element, a tubular cylinder extending from an opening in said element, a force transmitting liquid in said element, a diaphragm subject to osmosis and closing said opening, a piston in said cylinder and engaging said diaphragm for movement thereby a plunger extending from said piston and out of said cylinder, a shoulder in said cylinder and facing said piston, a spring surrounding said plunger and having one end acting against said shoulder and its other end acting against said piston, a closure member of flexible material engaging said cylinder and surrounding said plunger and held against said piston by said spring, and a viscous sealing material coating said closure member to keep said diaphragm free from a fluid medium surrounding said cylinder so that osmotic pressure can not set up through said diaphragm.

14. In a device of the character described, means to be actuated and adapted to be positioned in a fluid medium, a chambered element having a wall opening and containing a different fluid medium, a diaphragm closing said opening and being of a pervious material capable of creating osmotic pressure between the fluid mediums, said diaphragm being movable by pressure of the fluid medium in said chambered element, means to transmit movement of said diaphragm to said means to be actuated, and sealing material under pressure acting to maintain said diaphragm free from contact with the first-named fluid medium so that osmotic pressure cannot set up between the fluid mediums through said diaphragm.

15. In a device of the character described, means to be actuated and adapted to be positioned in one fluid medium, a chambered element having a wall opening and containing a different fluid medium, a diaphragm closing said opening and being of a pervious material capable of creating osmotic pressure between the fluid mediums, said diaphragm being movable by the pressure of the fluid medium in said chambered element, means to transmit movement of said diaphragm to said means to be actuated, sealing material under pressure acting to hold said one fluid medium from contact with said diaphragm so that osmotic pressure can not set up between the mediums through said diaphragm, and a viscous material substantially insoluble in the mediums and coating said sealing material.

SERGIUS VERNET.