April 17, 1956 I. V. K. HOTT ET AL 2,742,257

FOOT TYPE HIGH LIFT JACK

Filed Dec. 26, 1952 4 Sheets-Sheet 1

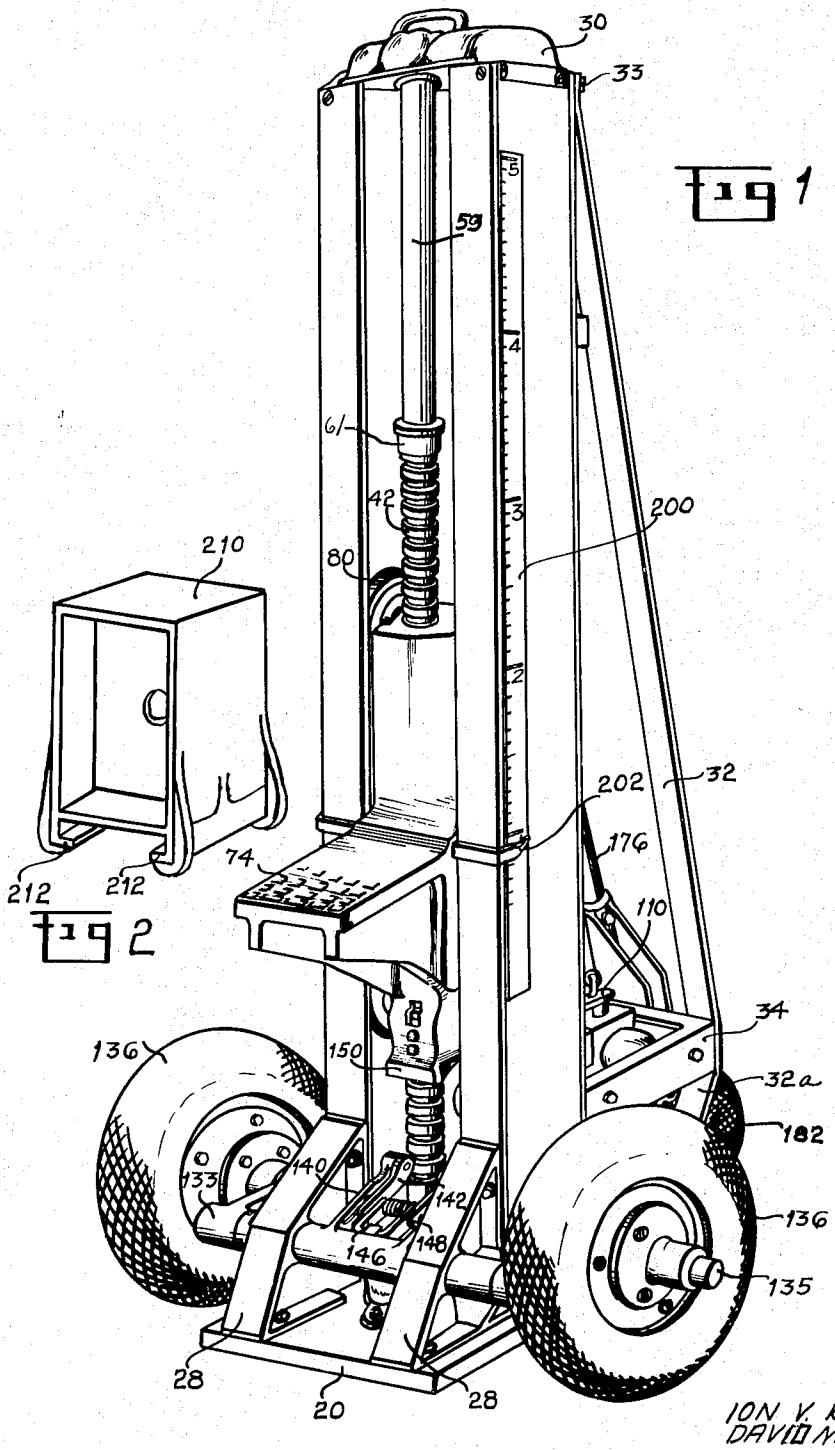

Fig 1

Fig 2

INVENTORS.
ION V. K. HOTT
DAVID M. GOLDZWIG
BY
Henry G. Dyhrig
THEIR ATTORNEY

April 17, 1956 I. V. K. HOTT ET AL 2,742,257

FOOT TYPE HIGH LIFT JACK

Filed Dec. 26, 1952 4 Sheets-Sheet 2

Fig 3

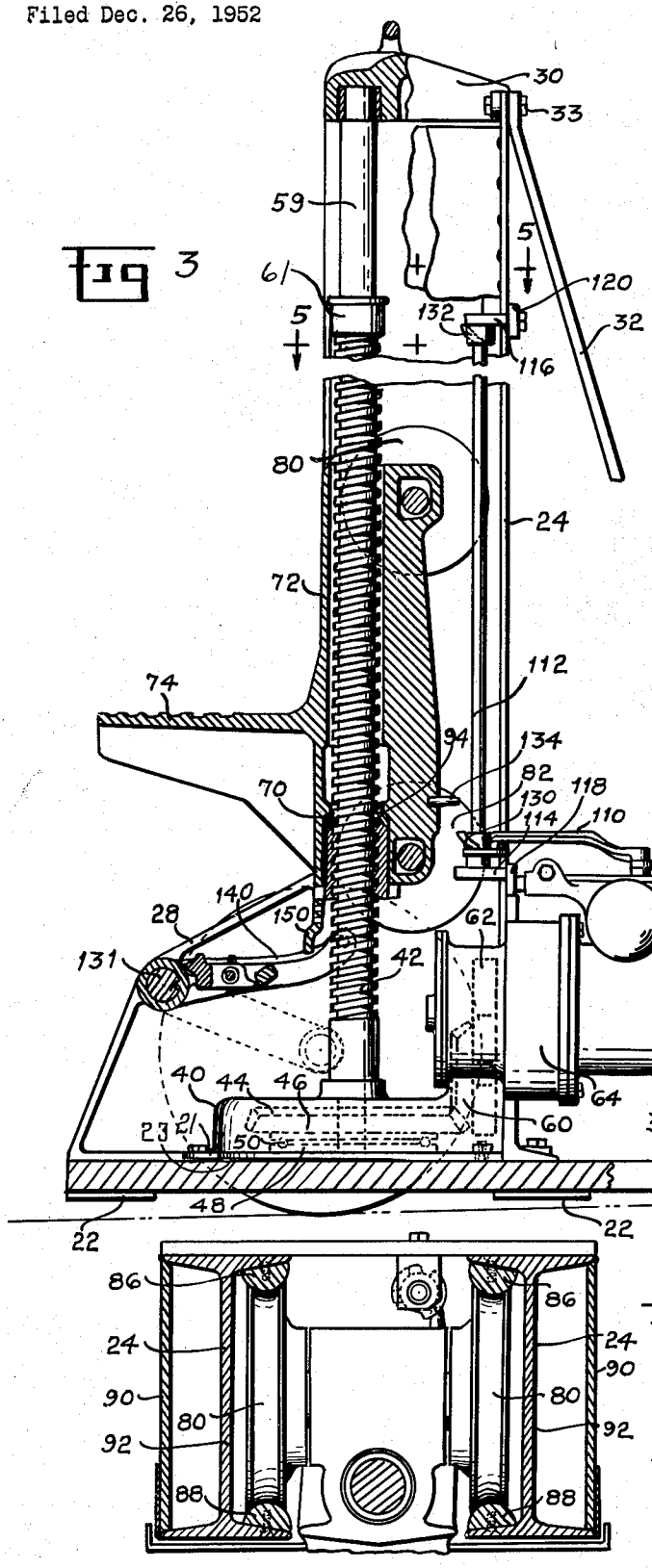

Fig 4

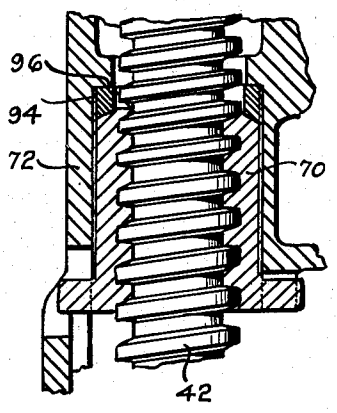

Fig 5

INVENTORS
ION V. K. HOTT
DAVID M. GOLDZWIG
BY
Henry G. Dyburg
THEIR ATTORNEY

April 17, 1956 I. V. K. HOTT ET AL 2,742,257

FOOT TYPE HIGH LIFT JACK

Filed Dec. 26, 1952 4 Sheets-Sheet 3

Fig 6

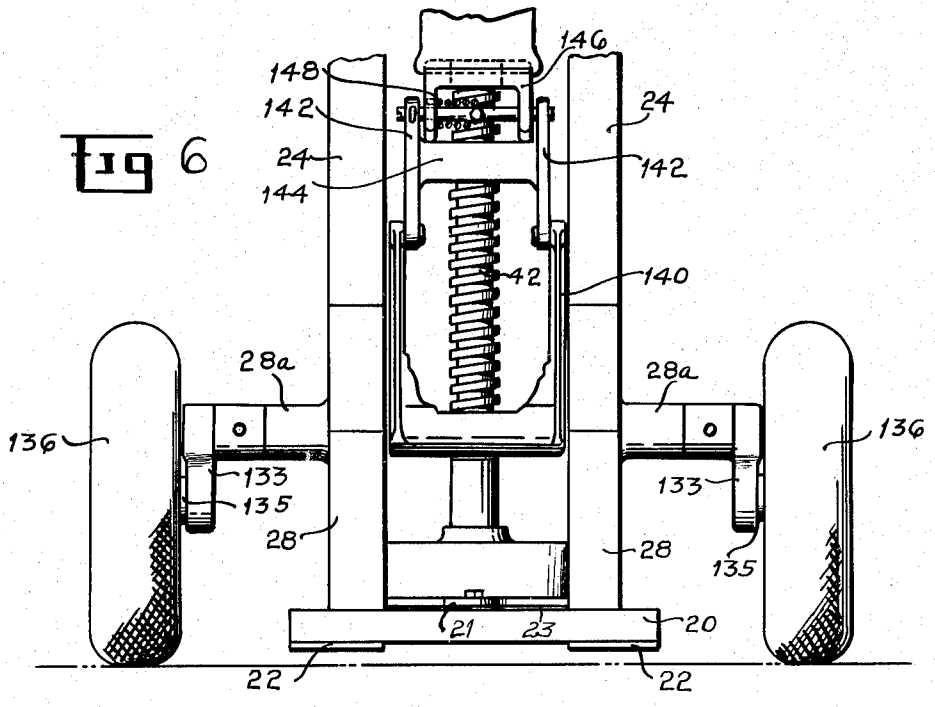

Fig 7

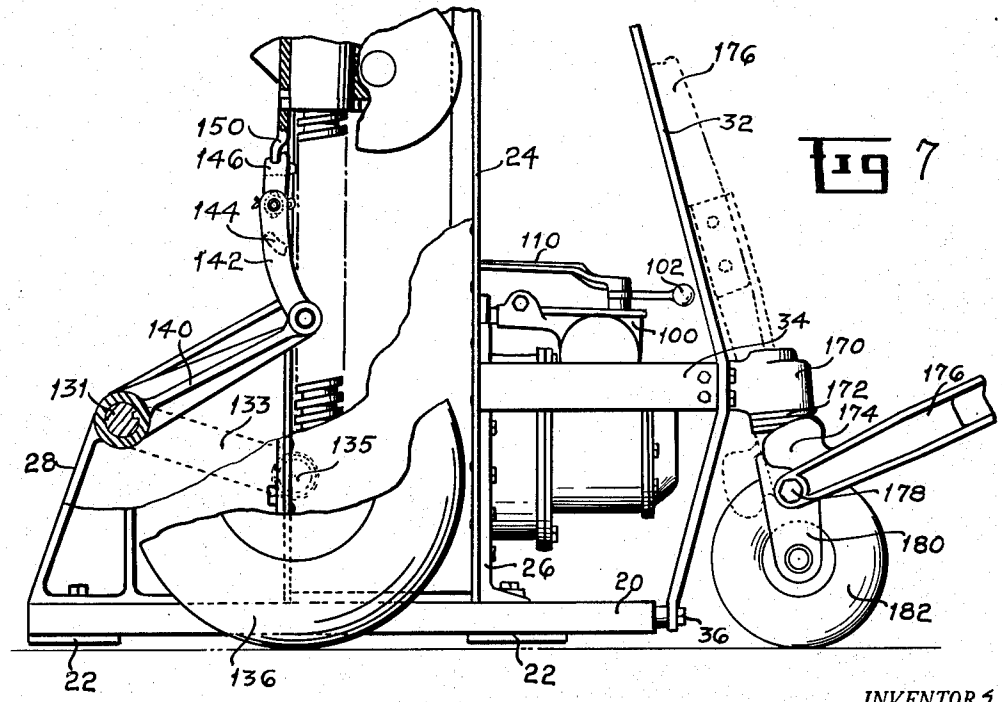

INVENTORS
ION V. K. HOTT
DAVID M. GOLDWIG
BY
Henry G. Dybvig
THEIR ATTORNEY

April 17, 1956 I. V. K. HOTT ET AL 2,742,257

FOOT TYPE HIGH LIFT JACK

Filed Dec. 26, 1952 4 Sheets-Sheet 4

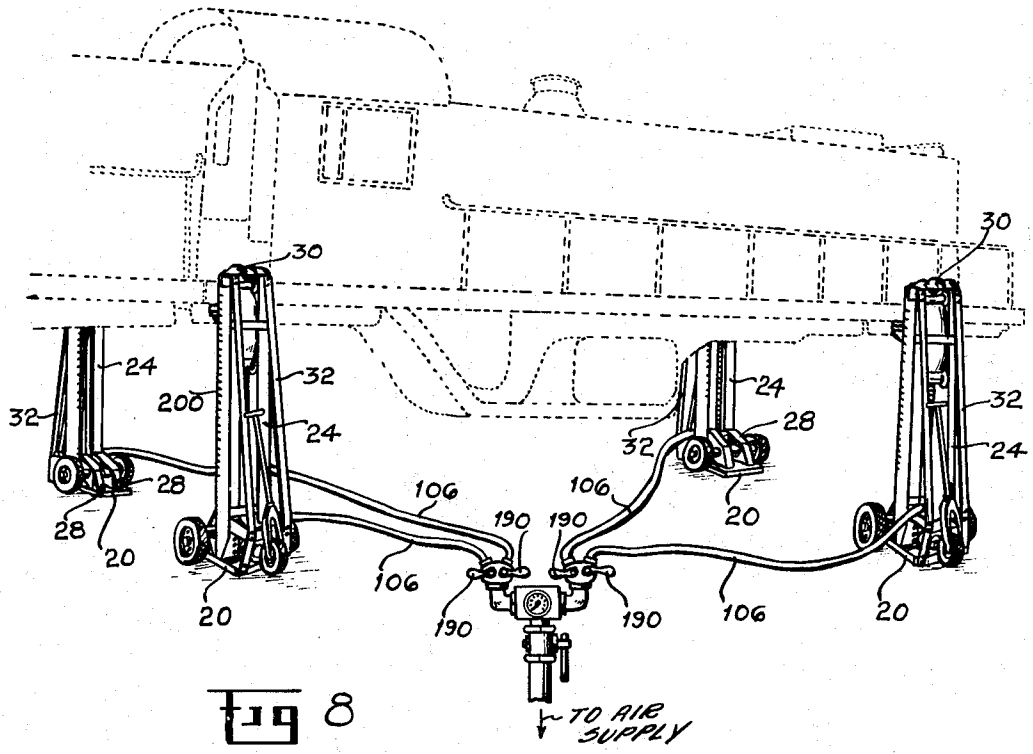

Fig 8

INVENTORS.
ION V. K. HOTT
DAVID M. GOLDZWIG
BY
Henry G. Dybvig
THEIR ATTORNEY.

United States Patent Office 2,742,257 Patented Apr. 17, 1956

2,742,257

FOOT TYPE HIGH LIFT JACK

Ion V. K. Hott and David M. Goldzwig, Dayton, Ohio, assignors to The Joyce-Cridland Company, Dayton, Ohio, a corporation of Ohio

Application December 26, 1952, Serial No. 328,032

7 Claims. (Cl. 254—7)

This invention relates to a foot type high lift jack and more particularly to a foot type high lift jack that is portable and adapted for heavy duty, as for example, for use in lifting diesel engines, although not necessarily so limited.

In roundhouses and in railroad yards it is at times necessary to lift or raise heavy loads. The equipment required to raise these heavy loads must, of necessity, have sufficient strength to carry the load and be portable, so that the equipment may be moved into operative position with a minimum amount of labor and, at the same time, be so balanced that in moving the equipment from place to place the chances of the equipment tipping or falling over are reduced to a minimum. It is important for the sake of safety, in that equipment that weighs thousands of pounds and extends upwardly eight feet or more from the floor, creates a hazard if it is not well balanced. In order to facilitate the ease of handling, light weight of the equipment is an important factor.

An object of this invention is to provide a foot type high lift jack that is made from light weight material, and at the same time provided with sufficient strength that it is capable of raising heavy loads through a considerable distance without danger of upsetting. This has been accomplished by making many of the parts from light weight metal, such as alumium alloy, the parts being so designed and the structure so balanced and reinforced that stresses in the frame structure are held to a minimum. A comparatively large flat base is used, adapted to be seated directly on the concrete or the floor or on the ground. Another object of this invention is to provide wheels for transferring the jack from one place to another, the wheels being mounted upon movable frames or supports that may be mechanically driven from inoperative position into operative position, or vice versa.

Another object of this invention is to provide a frame assembly to properly guide the lifting foot, which frame assembly is made from parts produced from light weight material, which parts are available on the open market, the parts being reinforced so as to provide adequate strength. This has been accomplished by using aluminum alloy I-beams as vertical frames, braced by light weight strips of aluminum alloy metal having the desired tensile strength, and angularly disposed, so as to support the frame structure in a vertical position when in use, the flanges of the I-beams being lined with semi-cylindrical rail members functioning as guides and supports for rollers used in guiding the foot in a vertical path.

Another object of this invention is to provide a pneumatic drive used in actuating the jack screw, having mounted thereon a lifting foot, the same jack screw being used in lifting the jack from the base of the frame structure upon wheels forming a carriage used in moving the jack from one position to another, the lifting mechanism having two operative ranges of positions, one, when the lifting foot is to be used in raising the body from one range of levels. The other position is used in raising a body from a lower range of levels.

Other objects and advantages reside in the construction of parts, the combination thereof and the mode of operation, as will become more apparent from the following description.

In the drawings,

Figure 1 is a perspective view of the foot type high lift jack.

Figure 2 discloses a support adapted to be used in association with the foot of the high lift jack shown in Figure 1.

Figure 3 is a vertical cross sectional view of the high lift foot jack.

Figure 4 is a fragmentary, enlarged, detail, cross sectional view of the jack screw and parts associated therewith.

Figure 5 is a cross sectional view taken substantially on the line 5–5 of Figure 3.

Figure 6 is a framentary, front elevational view of the base with parts broken away.

Figure 7 is a fragmentary side elevational view of the mechanism used in raising the high lift upon wheels with the foot at high level, with parts broken away and other parts shown in section.

Figure 8 discloses a plurality of high lift jacks used in lifting a locomotive or a Diesel engine, as the case may be.

Referring to the drawings, the reference numeral **20** indicates a base plate forming a bed for a high lift jack. On the under side of the base plate **20** are positioned a plurality of foot pads **22** upon which the base plate rests when the jack is in actual use. A pair of vertically extending parallel I-beams or standards **24** are fixedly attached to the base plate and supported thereon. In order to prevent titling of the I-beams with respect to the base **20**, a pair of brackets **26**, which may be referred to as heel brackets, are secured to the rear flanges of the I-beams **24** and rigidly bolted to the base plate **20**. In addition to the heel brackets **26**, a pair of toe brackets **28** are mounted on the front side of the I-beams and bolted thereto and also bolted to the base plate **20**. These I-beams are preferably made from a light weight material, such as aluminum or an aluminum alloy, or some other suitable light weight material.

A capping member **30** is fixedly attached to the I-beams **24** supporting the upper ends of the I-beams in fixed spaced relation. The I-beams **24** are braced by a pair of braces **32** attached to the opposite sides of the capping member by screws or bolts **33**, the braces **32** extending downwardly to a bracket **34** attached in space relation from the bottom of the I-beams **24**. The braces **32** have their lower ends **32***a* extending inwardly and are attached to the base **20** by suitable bolts **36**.

A gear casing **40**, positioned between the I-beams **24** and fixedly attached to the base plate **20**, has journalled therein a jack screw **42**. The lower end of the jack screw **42** has keyed thereto a bevelled gear **44** resting upon a race **46** of an end thrust ball bearing having a stationary race **48** resting upon a support **21** threadedly engaging the gear casing **40**. As clearly seen in Figure 3, there is a gap **23** between the leading edge of the support **21** and the base plate **20**. This gap extends rearwardly to approximately the center of the axis of rotation of the jack screw **42**, so that when a load is thrown upon the jack screw **42**, as will be explained more fully later, the gear casing is permitted to rock upon the base **20**, so as to eliminate any binding action between the jack screw and the gear casing. Suitable anti-friction bearings **50** are mounted in the annular bearing seat in races **46** and **48**. The upper end of the jack screw **42** terminates in a cylindrical portion **59** journalled in a bearing seated in a suitable cavity in the capping member **30**. The diameter of the cylindrical portion **59** is substantially equal to the diameter of member **42** measured at the root of

the threads. A cup-shaped collar member **61** is slidingly mounted on the cylindrical portion **59** and normally rests on top of the threads of the jack screw **42**.

The gear casing **40** supports a driving unit including a bevelled pinion **60** driven through suitable speed reducing gears **62** driven from an air motor represented broadly by the reference numeral **64**. The controls and the source of energy for the air motor will be described more fully later.

As may best be seen by referring to Figures 3 and 4, the jack screw **42** is used in actuating a nut **70** non-rotatably mounted in a vertically disposed carriage **72** provided with a vertically disposed aperture, through which the jack screw **42** extends. The carriage **72** is provided with a foot portion **74** that projects forwardly between the I-beams **24**. The carriage is guided in a vertical path by suitable grooved wheels **80** and **82**, the grooved wheels **80** being arranged on opposite sides of the carriage near the top thereof and the grooved wheels **82** being arranged on opposite sides of the carriage near the bottom thereof. These grooved wheels **80** and **82** ride on substantially semi-circular rails **86** and **88**, the rails **86** being secured to the rear inner flanges of the I-beams **24**, the rails **88** being secured to the opposite flanges of the I-beams **24**.

As a load is applied upon the foot portion **74**, it can readily be seen from an inspection of Figure 3 that the carriage will tend to rotate in a counterclockwise direction, so that the upper wheels **80** will exert a pressure against the rails **88** and the lower wheels **82** will exert a pressure against the rails **86**. The wheels **80** and **82**, being provided with semi-cylindrical shaped annular grooves, will always track on the rails **86** and **88**, even though the flanges will flex slightly. It is quite obvious that the load upon the foot portion **74** will cause the carriage **72** to tend to spread the inner flanges of the I-beams **24**. Being these I-beams are made from such material as aluminum alloy, there will be a tendency for the webs of the I-beams to flex or bend, so that the inner I-beam flanges will tend to move outwardly and the outer I-beam flanges will tend to move toward each other. Each of the I-beams has been provided with a vertically disposed plate **90**, as best seen in Figure 5, snugly seated between the outer flanges of the I-beams. The plates **90** cooperate with the webs **92** to prevent buckling of the webs and thereby deter flexing of the flanges. By utilizing semi-circular or semi-cylindrical rails and grooved wheels, the wheels will properly track on the rails, even though there may be a slight flexing when the foot portion **74** supports an extremely heavy load.

A bearing collar **94**, as best seen in Figure 4, is positioned between the nut **70** and a shoulder **96** projecting inwardly from the aperture in the carriage **72**. This bearing collar **94** relieves any binding action that might tend to occur if the nut **70** were integral with the carriage by allowing the nut to shift in the carriage. By rotating the jack screw, it can readily be seen that the carriage **72** and the foot portion **74** may be raised and lowered. When raised upwardly, the carriage may engage the collar **61**, causing this collar to be slid upwardly on the reduced portion **59**.

A three-way (up, off and down) valve member **100** is manually controlled by a lever **102** for opening and closing the valve. By opening the valve, air may be admitted to the air motor from a hose **106** connected to a suitable air supply. As the valve **100** is opened, air is admitted to the air motor, which drives the jack screw in one direction or the other, depending upon which way the three-way valve **100** is opened, as is well known to those skilled in the art.

The safety device includes an air shut-off arm **110** connected to the valve **100** and projecting between the two I-beams where the arm is secured to a vertically disposed shaft **112** journalled in brackets **114** and **116**, supported upon the I-beams upon suitable cross members **118** and **120** respectively. The shaft **112** supports at its lower end a cam **130** and at its upper end another cam **132**, the cams **130** and **132** being mounted in the path of a pin **134** projecting from the carriage **72**. By this arrangement, if the carriage **72** is lowered to a vulnerable position, the pin **134** will engage the cam surface **130** to rotate the shaft **112**, thereby actuating the arm **110** to close the valve supplying air to the air motor. Likewise, if the carriage is raised upwardly to such an extent that the pin **134** comes in contact with the cam **132**, the shaft **112** is again rotated, so as to cause the arm **110** to close the valve.

A plurality of these high lift jacks may be used in lifting heavy vehicles, such as diesel engines, locomotives, et cetera, as clearly illustrated in Figure 8. That being the case, it is necessary to provide dollies or trucks to permit wheeling the jacks in position. This has been accomplished by mounting an axle or shaft **131** journalled in suitable bearings in brackets **28**. The brackets **28** may be provided with tubular extensions **28***a* for supporting the shaft or axle. The outer ends of the shaft **131** have keyed thereto brackets **133** having fixedly secured thereto spindles **135**, rotatably supporting the wheels **136**, there being one wheel on either side of the jack. A control bracket **140** is keyed to the axle or shaft **131** and is mounted between the brackets **28**, so that as the bracket **140** is rotated, the axle or shaft **131** is rotated, and thereby the brackets **133** are rotated so as to raise or lower the wheels **136** with respect to the jack.

Due to the fact that these jacks are extremely heavy, a power mechanism is used in actuating the bracket **140** in a clockwise or counterclockwise direction, as viewed in Figure 7. The bracket **140** has pivotally attached thereto a pair of link-like members **142** interconnected by a transverse member **144** adapted to engage the lower end of a bracket **146** pivotally attached to the upper ends of link members **142**. The bracket **146** is normally biased into the extended position by a torsion spring **148**. The upper end of the bracket **146** is provided with a slot adapted to receive the downwardly projecting lip or flange **150** projecting downwardly from the carriage **72**. Thus, by rotating the jack screw **42** by the air motor, so as to lower the carriage **72**, to cause the lip **150** to engage the bracket **146**, it can readily be seen that the brackets **133** will be rotated in a clockwise direction, as viewed in Figure 7, so as to cause the wheels **136** to engage the floor, or base, upon which the jack stands, to raise the forward end of the jack up from the floor. The rear end of the jack is provided with a rearwardly projecting member **170** provided with a cam surface **172** on either side thereof, adapted to engage a cam **174** mounted on a handle **176** pivotally mounted at **178** to a fork **180** supporting a wheel **182**. The fork **180** terminates in a stubshaft positioned in an aperture in member **170**. In member **170** there is a spring, not shown, that biases the fork **180** and the wheel **182** upwardly, so that the wheel **182** is suspended in spaced relation from the floor when the handle is in the up and dotted position, as shown in Figure 7. As the handle **176** is rotated from the dot-dash position shown in Figure 7 into the full line position shown in Figure 7, the cam **174** engaging the cam follower **172** raises the rear end of the jack up from the floor. By this arrangement, it is possible for the operator to tow the jack from one position to another by manipulating the handle **176**. This handle is also used in steering the wheel **182**, so as to control the direction of movement of the jack.

When the jack is actuated into position, as shown in Figure 8, there being one jack for each corner of the diesel engine, the handle **176** is raised from the full line position shown in Figure 7 to the dot-dash position shown in this figure, so as to lower the rear end of the jack. The motor is connected by a suitable hose **106** to the air supply. The jack screw is rotated in the opposite direction from which the brackets **133** were rotated in raising

the jack from the floor, so as to cause the forward end of the jack to rest upon the foot pads **22**. The bracket **142** may then be folded into the position shown in Figure 3.

In the event it is necessary to lower the foot portion **74** to a position lower than the releasing position of the wheels shown in Figure 7, the carriage **72** may be lowered with the outer link members **142** in the position shown in Figure 3 until the lip **150** engages the links **140**. Then, by lowering the carriage **72**, the lip **150** engaging the links **140** raises or lowers the wheels, as the case may be, with the foot portion in a lower position, in which event it is adapted to be projected under a load to be lifted only slightly higher than the top of the foot portion **74**.

All of the jacks that are to be used for raising a locomotive are moved into position prior to the raising of the locomotive. After the jacks have been moved into position, a hose from each of the motors of the jacks are connected to a common source of supply of air under pressure. The relative movement of the several motors and the several jack screws **42** raising the several foot portions **74** is controlled by a plurality of valves **190**, one for each jack. The operator tending the valves **190** observes the position of the several foot portions **74** by observing the graduated scale **200** found on each jack and the indicant **202** traveling with the carriage **72**. If one jack travels faster than the others, the corresponding valve **190** is partially closed, so as to reduce the air supply to that particular jack. Thus, it is possible to raise all four corners of a locomotive uniformly.

In some cases the normal position of the foot portion **74** may be too low to raise the body to the proper height. A foot extender **212** may be slipped over the end of the foot portion **74**, so that the top of member **210** engages the under side of the load. A foot extender, having the proper height for a particular job, may be used.

Although the preferred embodiment of the device has been described, it will be understood that within the purview of this invention various changes may be made in the form, details, proportion and arrangement of parts, the combination thereof and mode of operation, which generally stated consist in a device capable of carrying out the objects set forth, as disclosed and defined in the appended claims.

Having thus described our invention, we claim:

1. A high lift jack assembly including a base, a vertically disposed jack screw supported upon the base, frame means extending upwardly from the base for supporting the upper end of the jack screw, a carriage mounted upon the jack screw and guided by the frame means, said carriage having a downwardly projecting abutment portion, and a wheel assembly for transporting the high lift jack from one position to another, said wheel assembly including a horizontally disposed shaft, means for pivotally mounting the shaft in spaced relation from the base and near one end thereof, a pair of brackets, one on each end of the shaft and fixedly keyed to the shaft, a pair of pintles, one for each of the brackets and fixedly attached thereto, wheels mounted on the pintles, bracket means attached to the shaft and aligned with the downwardly projecting abutment portion of the carriage so that as the carriage is lowered the abutment portion engages the bracket means to rotate the shaft to thereby lower the wheels with respect to the base of the high lift jack to raise one end of the base upwardly, a third wheel means for supporting the other end of the base, and manually controlled means for lowering the relative elevation of said third wheel means with respect to said base to thereby raise said other end of the base so that when the first mentioned wheels and the third wheel means are lowered the high lift jack may be transported on the wheels.

2. A high lift jack assembly according to claim 1, wherein the third wheel means includes a bifurcated fork for supporting the third wheel, a lever pivotally attached to the bifurcated fork, and cam means actuated in response to movement of the lever for raising and lowering the third wheel with respect to the base of the jack.

3. A device according to claim 1, wherein the third wheel means includes a bracket having a vertically disposed recess, means for supporting the bracket near one end of the base with the recess being located in a portion projecting beyond the end of the base, a substantially vertically disposed shaft pivotally mounted in the recess, a bifurcated yoke projecting downwardly from the lower end of the shaft for supporting the third wheel, a lever pivotally mounted to the yoke, and eccentric cam means mounted on the lever so that as the lever is rotated about its pivot, the cam means engages the bracket to raise and lower the third wheel with respect to the base.

4. A high lift jack assembly according to claim 1, wherein the bracket means attached to the shaft and aligned with the abutment portion of the carriage includes a main bracket portion and a link extension pivotally mounted to the main bracket portion, the link extension when vertically disposed projecting upwardly to engage the abutment portion at a higher level than when the link extension is folded so as to extend parallel to the main bracket portion.

5. A high lift jack assembly according to claim 1, wherein the bracket means includes pivotally mounted extension means having two positions, one a vertical position and the other a horizontal position, the abutment portion engaging the extension means when in the vertical position and engaging the main body of the bracket means when the extension means is in a horizontal position.

6. The combination of a high lift jack with a truck assembly for transporting the high lift jack, said high lift jack including a frame assembly having a base, a vertically disposed jack screw rotatably mounted upon the base, a vertically disposed frame for supporting the upper end of the jack screw, said vertically disposed frame projecting upwardly from the base, a carriage mounted upon the jack screw, said carriage having a foot portion, said truck assembly including a pair of front wheels and a rear wheel, means responsive to the downward movement of the carriage for lowering at least some of the wheels with respect to the base so as to shift the support of the jack screw from the base to the wheels, said means including a safety mechanism adapted to buckle in the event the wheels are lowered beyond predetermined limits.

7. The combination of a high lift jack with a truck assembly for transporting the high lift jack, said high lift jack including a base normally supporting the high lift jack, a vertically disposed jack screw mounted upon the base, means for supporting the upper end of the jack screw, a carriage mounted for vertical movement by the jack screw, said truck assembly including a pair of front wheels, means for lowering the front wheels in response to vertical movement of the carriage, said last mentioned means including a safety device for disengaging the carriage from said means when the front wheels are lowered beyond a predetermined position.

References Cited in the file of this patent

UNITED STATES PATENTS

761,220	Gorman et al.	May 31, 1904
1,228,162	Anderson	May 29, 1917
1,432,299	Pleines	Oct. 17, 1922
1,440,434	Bakken	Jan. 2, 1923
1,477,790	Townsend	Dec. 18, 1923
1,483,600	Schroeder	Feb. 12, 1924
2,321,029	Johnson	June 8, 1943
2,490,198	Boone	Dec. 6, 1949