April 20, 1965 R. M. CLARK 3,179,107

HYPODERMIC UNIT WITH AN IMPROVED MOUNTING FOR A REPLACEABLE NEEDLE ASSEMBLY

Filed Nov. 21, 1962

FIG. 1

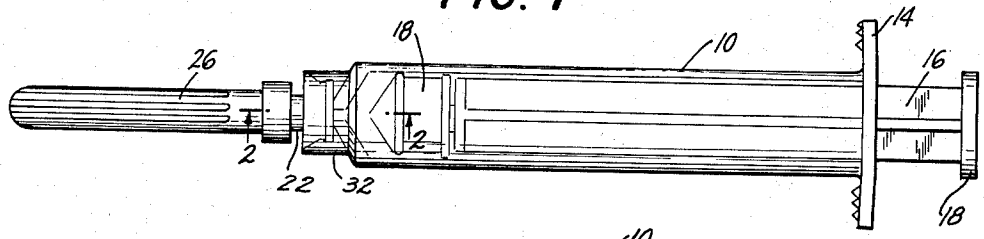

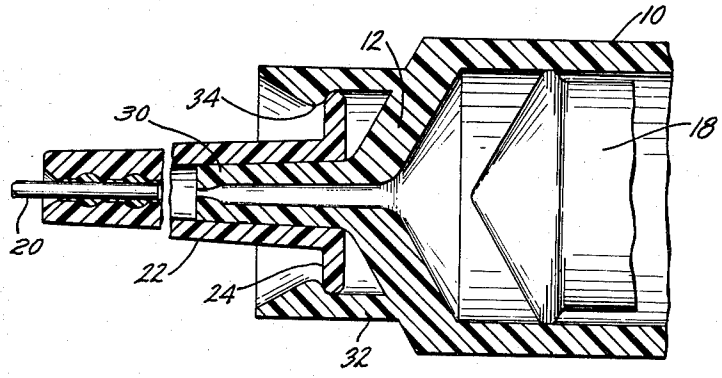

FIG. 2

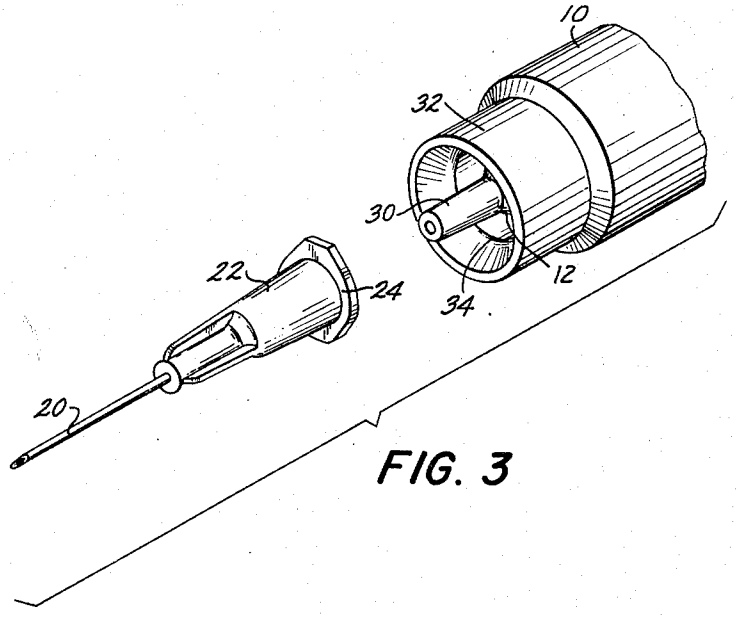

FIG. 3

INVENTOR.
ROBERT M. CLARK

BY

Kane, Dalsimer and Kane
ATTORNEYS

United States Patent Office 3,179,107 Patented Apr. 20, 1965

3,179,107

HYPODERMIC UNIT WITH AN IMPROVED MOUNTING FOR A REPLACEABLE NEEDLE ASSEMBLY

Robert M. Clark, Waldwick, N.J., assignor to Becton Dickinson and Company, East Rutherford, N.J., a corporation of New Jersey

Filed Nov. 21, 1962, Ser. No. 239,268
1 Claim. (Cl. 128—221)

This invention relates to a hypodermic unit, such as a hypodermic syringe, having an improved mounting for a replaceable needle assembly.

It is an object of the present invention to provide an improved mounting for a replaceable hypodermic needle assembly wherein the needle assembly may be readily applied to and removed from the mounting but will nevertheless be firmly held in place against accidental displacement while it is in use.

Replaceable hypodermic needle assemblies generally consist of a metal cannula mounted in a hub having an open outer end. The hub is generally provided with laterally projecting flanges at the open outer end thereof which may cooperate with a luer type fitting to hold the needle in place while it is in use. However, many hypodermic syringes and other hypodermic units particularly of the disposable type, are not provided with luer type fittings as these increase the cost thereof. One commonly used mounting simply consists of a tubular tip having a tapered outer surface over which the open end of the hub of the needle is fitted. This type of mounting depends simply upon the frictional engagement between the hub and the tip. If the hub is not tightly applied to the tip or if a force in tension is accidentally or otherwise applied to the hub leakage will occur between the hub and the tip and also the needle assembly might be displaced in use.

It is a particular object of the present invention to overcome the difficulties and disadvantages heretofore encountered and to provide an improved mounting for a replaceable hypodermic needle assembly which insures sealing engagement between the needle assembly and the hypodermic unit and also prevents accidental displacement of the needle assembly when the unit is in use.

Further objects include the provision of a mounting for a hypodermic needle assembly of the above indicated type which is relatively inexpensive to manufacture and which is simple to use so as to insure positive sealing interengagement between the needle assembly and the hypodermic unit while preventing accidental displacement of the needle assembly.

My invention contemplates the provision of an improved mounting for a hypodermic unit having a tubular tip projecting outwardly from the hypodermic unit for sealingly engaging the open outer end of a supporting hub and also the provision of a retaining collar projecting outwardly from the hypodermic unit in concentric relationship with the tip and spaced therefrom a distance large enough to accommodate the hub with the retaining collar having an inside surface portion arranged to frictionally engage the flange of the hub to releasably retain the hypodermic needle assembly in position. In a preferred form of my invention, the retaining collar is made of a resilient plastic material and is formed with an inwardly projecting rib extending around its inner surface and past which the flange of the hub may snap as it shifts into and out of position.

In the accompanying drawing, FIG. 1 is a side elevational view of a complete hypodermic unit specifically a hypodermic syringe having an improved hypodermic needle mounting embodying my invention;

FIG. 2 is a detailed sectional view on an enlarged scale in the direction of the arrows on the line 2—2 of FIG. 1

showing my improved hypodermic needle mounting, and

FIG. 3 is an exploded view in perspective showing my improved needle mounting with a hypodermic needle assembly of the type which may be applied thereto.

My invention is applicable to any type of hypodermic unit to which replaceable needle assemblies may be applied such as blood donor sets, hypodermic syringes, ampoules or the like. For the purposes of illustration I have shown my invention in the accompanying drawing as applied to one form of hypodermic syringe.

The illustrated hypodermic syringe comprises a syringe barrel 10 open at its upper end, and provided with an integral tapered or angularly disposed lower end wall 12. At its open upper end, the syringe barrel is provided with a laterally projecting finger-grip portion 14.

The illustrated syringe barrel is formed of a suitable material inert to the medicaments or other materials used therein. Thus, it may be made of a suitable plastic material such as polypropylene, polyethylene, polystyrene or the like.

A suitable piston or plunger assembly is also provided for use with the syringe barrel. In the illustrated embodiment the piston assembly comprises a piston rod 16 which is cruciform in cross section and has a disc like handle portion 18 at its upper end and a stopper or piston 18 assembled therewith at its lower end. The piston rod may be made of similar material to the barrel 10. The stopper or piston 18 is preferably made of a suitable elastomeric material inert to the medicaments in other materials used in the syringe such as natural or synthetic rubber.

The stopper or piston 18 has a tapered or angularly disposed head portion as shown. It also has a pair of circumferential flanges which have wiping engagement with the interior surface of the barrel.

The hypodermic needle assembly illustrated in the drawings is one conventional type and comprises a cannula 20 made of a suitable metal and a hub 22 in which the cannula is suitably mounted. The hub is made of a suitable plastic material, preferably a thermoplastic material such as polyethylene, polypropylene, polystyrene, cellulose acetate or the polymers or copolymers of vinyl chloride.

The hub is tubular in form and is open at its outer end and has a laterally projecting flange portion extending around the upper end as shown at 24. Diametrically opposite portions of the flange project outwardly a greater distance as shown forming luer lock ears for engagement with a luer type fitting. The outer end of the hub is provided with a tapered bore of relatively larger diameter while the needle end of the bore is of relatively reduced diameter.

The blunt end of the cannula is disposed in the portion of the bore of the hub of relatively reduced diameter and is retained therein by a suitable resin binder such as an epoxy resin binder.

A suitable needle shield such as the plastic sheath 26 may be provided around the needle assembly so as to protect the needle and so as also to afford protection therefrom. The needle protector is made of a suitable plastic material such as polyethylene, polypropylene, a polymer or copolymer of vinyl chloride and the like. It is tubular in form, closed at its outer end, of sufficient length to encase the entire needle and at its upper end the internal bore is of a size to snugly accommodate the hub of the needle and form frictional engagement therewith.

The hypodermic syringe barrel and plunger assembly and also the hypodermic needle assembly and sheath are of conventional construction and do not per se form my invention. My invention is concerned with the improved mounting for hypodermic needle assemblies which is pro-

vided at the lower end of the hypodermic syringe barrel in the accompanying drawing and on which the hypodermic needle assembly is replaceably mounted as shown.

My improved mounting for hypodermic needle assemblies comprises a central tubular tip 30 formed integrally with the lower end wall portion of the syringe barrel and projecting outwardly therefrom. The bore which extends through the tubular tip communicates with the interior of the barrel so that fluids may be dispensed from the barrel through the tip or drawn through the tip into the barrel. The exterior surface of the tip tapers towards its free end and is of a size that when it is inserted into the open end of the hub of a needle assembly it forms sealing frictional engagement therewith as shown most clearly in FIG. 2. The tip is preferably made of the same plastic material from which the syringe barrel and end wall are made.

A retaining collar 32 is also formed integrally with and projects outwardly from the lower end wall portion of the syringe barrel in concentric relationship with the tip 30 and spaced outwardly therefrom a distance large enough to accommodate the flange of the hub of the hypodermic needle assembly. The retaining collar 32 is made of the same type of plastic material as the syringe barrel and accordingly is inherently resilient. It is provided with an inside surface portion arranged to frictionally engage the flange 24 on the hub so as to releasably retain the hypodermic needle assembly in position at the end of the syringe barrel.

The particular configuration of the surface portion of the retaining collar which engages the hub flange may be varied. A preferred arrangement is shown in the accompanying drawings and consists of an inwardly projecting rib 34 extending around the inside surface of the collar so as to frictionally engage the diametrically opposite outwardly projecting luer portions of the flange of the hub and past which the flange of the hub may snap into and out of position. In FIG. 2 the hub of the needle assembly is shown as mounted on the syringe tip with the flange portions of the hub snapped past the rib 34 as in fully applied relationship. When the hub is thus snapped into fully applied position, the hub will have sealing engagement with the tip and the rib 34 serves to retain the needle assembly in fully applied relationship against accidental displacement. Rib 34 has cam-like surfaces presenting a relatively gentle taper or slope towards the free end of retaining collar 32 and presenting a relatively sharper shoulder on its inner surface. Thus, the flanged portion of the hub of the needle is guided by the sloping cam-like surface until it snaps past the rib where it is retained in position by the shoulder-like abutment. The needle assembly can be removed if substantial force in tension is applied thereto.

In using a hypodermic unit embodying my invention, a hypodermic unit such as the illustrated syringe and also a hypodermic needle assembly are provided, both being preferably in sterile condition. The tip of the syringe is then introduced into the open outer end of the hub of the needle assembly and they are pressed towards each other until the flanged portion of the hub snaps past the rib 34 into engagement with the shoulder-like abutment. In that position the hub and the tip are then in sealing engagement with each other and the shoulder-like abutment of the rib serves to retain the hypodermic needle assembly in proper position against accidental displacement.

It will thus be seen that I have provided an improved mounting for a replaceable hypodermic needle assembly wherein the hypodermic needle assembly is retained in proper sealing engagement with the hypodermic unit and is held against accidental displacement.

It will also be seen that my improved mounting for hypodermic needle assemblies is of relatively simple and inexpensive construction and that hypodermic needle assemblies may be readily applied to or removed therefrom but will be retained in proper sealing engagement and held against accidental displacement while in use.

Modifications may be made in the illustrated and described embodiment of my invention without departing from the invention as set forth in the accompanying claim.

Having thus described my invention, I claim:

A hypodermic unit having a replaceable hypodermic needle assembly having a metal cannula and a supporting conical hub attached thereto with an open elongated outer end having a flange projecting laterally therefrom, said flange having diametrically opposed portions of greater length, said hub having a conically-shaped bore portion extending to said open outer end, said improved hypodermic unit comprising a tubular member having a supporting portion, a tubular conical tip having a bore and being in sealing engagement with the open outer end of the hub of the hypodermic needle assembly and projecting forwardly from said supporting portion, the tip being at an angle relative to the adjoining supporting portion and defining a junction therewith, the bore of said tip extending through said supporting portion and a retaining collar projecting forwardly from the supporting portion a distance less than that of said tip member in concentric relationship with the tip and spaced therefrom a distance large enough to accommodate the extended portions of the flange of the hub, said retaining collar being relatively resilient and having an inwardly projecting rib extending around its inside surface to frictionally engage the flange of the hub, said rib being provided with a cam-like surface extending at a relatively gentle slope towards the free end of the collar and having a relatively steep curved shoulder on its opposite side so that the flange of the hub may be guided along the cam-like gentle slope of the rib until it snaps into position in engagement with the shoulder of the rib, said tip being arranged to sealingly engage the hub of the needle assembly with the flange of the hub in engagement with the shoulder-like surface of the rib and disposed at said junction.

References Cited by the Examiner

UNITED STATES PATENTS

2,158,593	5/39	Scrimgeour	128—221
2,677,374	5/54	Burnside	128—218
2,727,514	12/55	Lockhart	128—218
2,902,995	9/59	Loper	128—215
2,953,243	9/60	Roehr	128—215

FOREIGN PATENTS

870,835	6/61	Great Britain.

RICHARD A. GAUDET, *Primary Examiner.*

JORDAN FRANKLIN, *Examiner.*