J. H. HAMMOND, JR.

SYSTEM FOR THE RADIOCONTROL OF MOVING BODIES.

APPLICATION FILED SEPT. 3, 1913. RENEWED APR. 14, 1919.

1,420,258. Patented June 20, 1922.

4 SHEETS—SHEET 1.

Fig. 1.

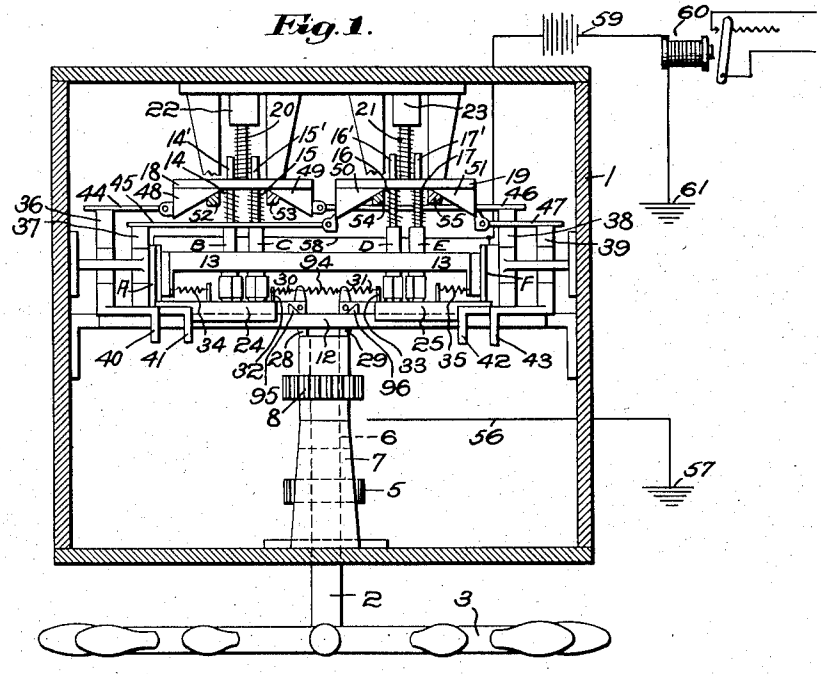

Fig. 2.

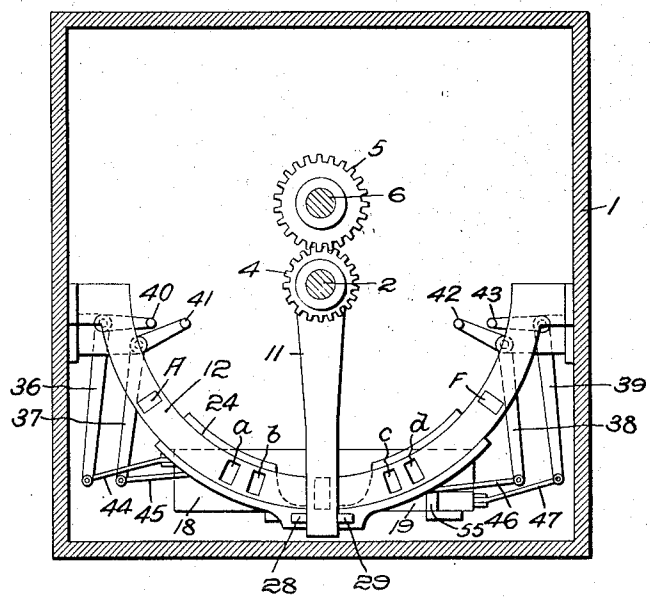

Witnesses:

Horace A. Crossman

Carl L. Choate.

Inventor:

John Hays Hammond, Jr.

by Emery Booth Janney & Varney

Attys.

J. H. HAMMOND, Jr.

SYSTEM FOR THE RADIOCONTROL OF MOVING BODIES.

APPLICATION FILED SEPT. 3, 1913. RENEWED APR. 14, 1919.

1,420,258. Patented June 20, 1922.

4 SHEETS—SHEET 2.

Fig. 3.

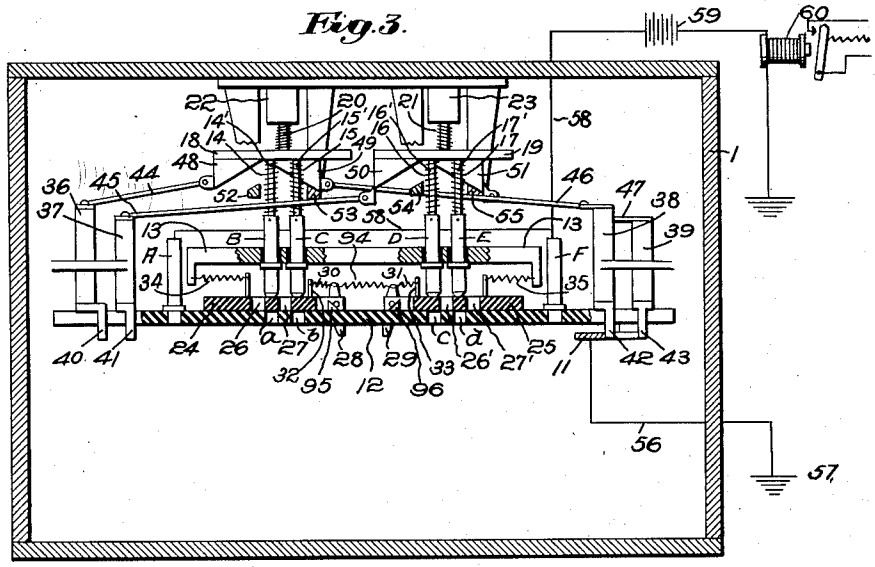

Fig. 4.

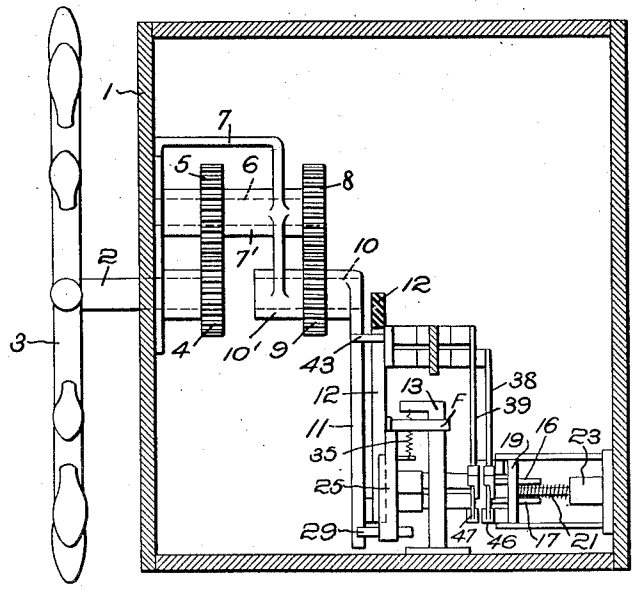

Witnesses:
Horace A. Crossman
Carl L. Choate.

Inventor:
John Hays Hammond, Jr.
by Emery Booth Janney & Varney
Attys.

J. H. HAMMOND, Jr.

SYSTEM FOR THE RADIOCONTROL OF MOVING BODIES.

APPLICATION FILED SEPT. 3, 1913. RENEWED APR. 14, 1919.

1,420,258. Patented June 20, 1922.

4 SHEETS—SHEET 3.

Fig. 5.

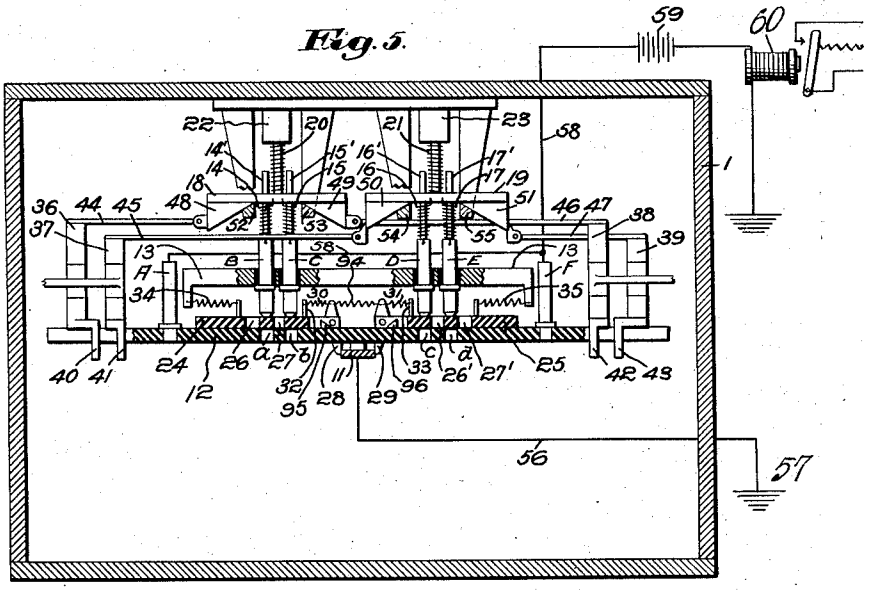

Fig. 6.

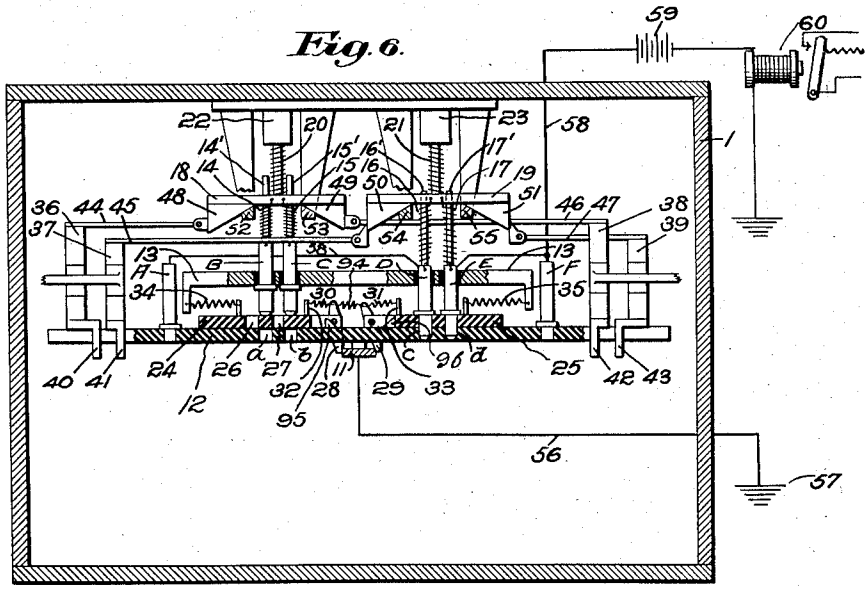

Witnesses:
Horace A. Crossman
Carl L. Choate.

Inventor:
John Hays Hammond, Jr.
by Emery Booth Janney & Varney
Attys.

J. H. HAMMOND, Jr.

SYSTEM FOR THE RADIOCONTROL OF MOVING BODIES.

APPLICATION FILED SEPT. 3, 1913. RENEWED APR. 14, 1919.

1,420,258. Patented June 20, 1922.

4 SHEETS—SHEET 4.

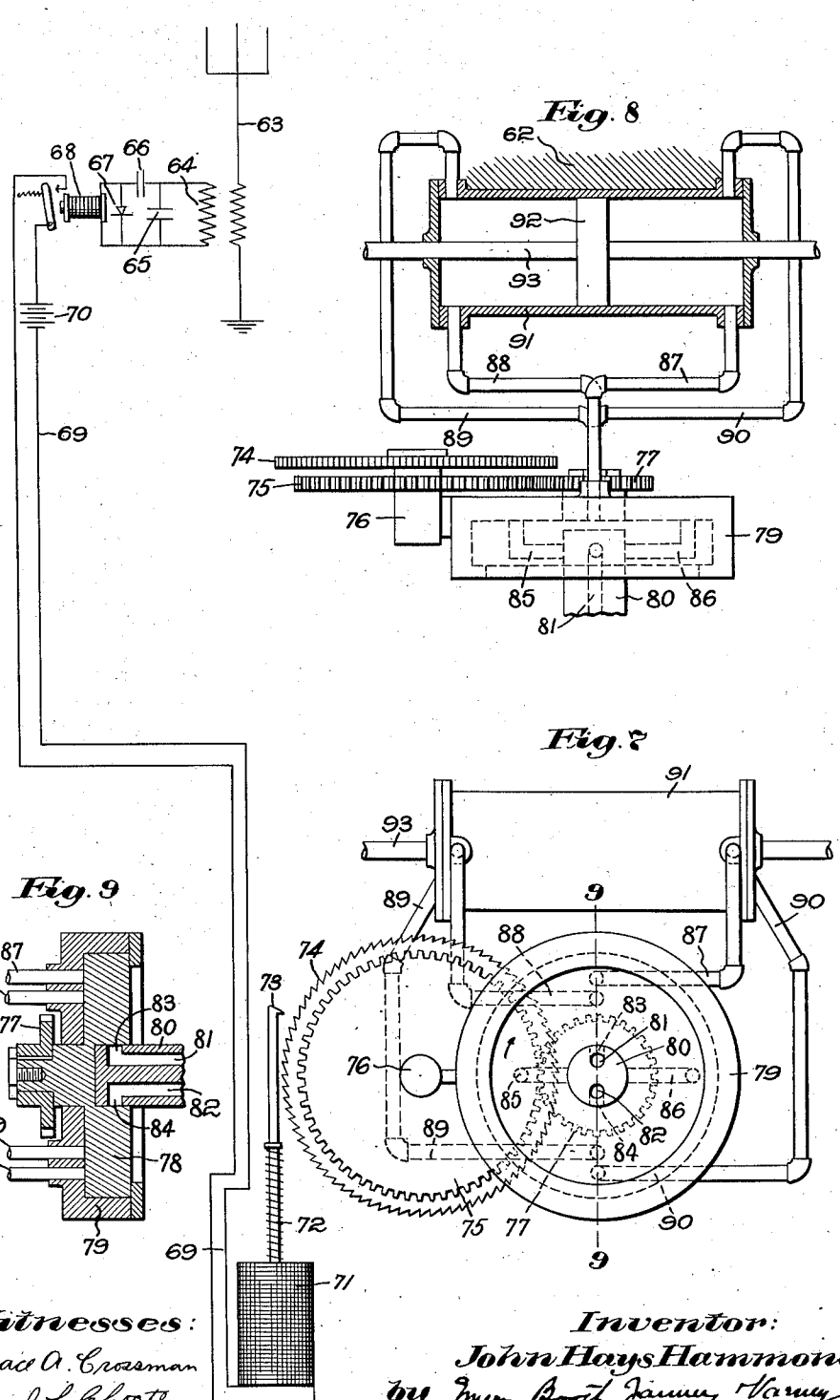

Witnesses:
Horace A. Crossman
Carl L. Choate.

Inventor:
John Hays Hammond, Jr.
by Emery Booth Janney & Varney
Attys.

UNITED STATES PATENT OFFICE.

JOHN HAYS HAMMOND, JR., OF GLOUCESTER, MASSACHUSETTS.

SYSTEM FOR THE RADIOCONTROL OF MOVING BODIES.

1,420,258. Specification of Letters Patent. Patented June 20, 1922.

Application filed September 3, 1913, Serial No. 788,034. Renewed April 14, 1919. Serial No. 290,108.

To all whom it may concern:

Be it known that I, JOHN HAYS HAMMOND, Jr., a citizen of the United States, and a resident of Gloucester, in the county of Essex and State of Massachusetts, have invented an Improvement in Systems for the Radiocontrol of Moving Bodies, of which the following description, in connection with the accompanying drawings, is a specification, like characters on the drawings representing like parts.

This invention relates to a system for the control of moving bodies by radiant energy transmitted from a distance.

In order that the principle of the invention may be readily understood, I have disclosed a single embodiment of said system in the accompanying drawings, wherein—

Fig. 1 is a view, partially in plan and partially in transverse section, of one type of mechanism at the sending station for effecting the control of moving bodies in accordance with my system;

Fig. 2 is a view, partially in front elevation and partially in vertical section, of the mechanism shown in Fig. 1;

Fig. 3 is a development, partially in plan and partially in transverse section, of the mechanism shown in Fig. 1 and showing the parts in one position;

Fig. 4 is a view, mainly in end elevation but partially in section, of the construction shown in Fig. 1;

Figs. 5 and 6 are developments similar to Fig. 3, but representing the parts in different positions;

Fig. 7 is a view, partially diagrammatic and partially in plan, of means upon the moving body for effecting different functioning movements;

Fig 8 is a view, partially in side elevation and partially in section, of the governing means on said movable body; and

Fig. 9 is a transverse section of a portion of said governing means.

In accordance with the invention herein disclosed, I contemplate controlling the functioning movements of or upon a moving body, such, for example, as a vessel, which may be of a torpedo or other type, or such as a land vehicle, or an aeroplane or other air vehicle. I contemplate, among other things, such an arrangement of parts at the sending station and upon the moving body that by moving a member at the sending station, I may, through the transmission of radiant energy, effect a fixed, predetermined movement of governing means upon said body, the movement of such governing means having a fixed relation to the movement of said member at the control station. Preferably the movement of said member is in a direction corresponding to that of the governing means, and herein I have typified as one embodiment of my invention the employment of means at the sending station and also upon the moving body, each of which is rotatable in opposite directions. By the movement of the member and governing means, I effect different functioning movements upon the vessel, which functioning movements depend upon the character of the moving body and the work to be performed thereby. I have herein represented my invention as applied to a vessel which may be a torpedo boat, and the disclosed functioning movements are those necessary to guide the said vessel. Within the scope of my invention, however, other functioning movements may be thus controlled, as for example the starting and stopping of the vessel and the launching or discharging of objects therefrom, such as illuminating objects or torches.

Referring more particularly to the drawings, and first to the mechanism at the sending station and which is represented in Figs. 1 to 6 inclusive, I have therein represented a box 1 of suitable material and shape. In one of the walls thereof and as herein represented in the front wall, I have mounted upon a shaft 2 a steering wheel 3 which may be similar in character to an automobile steering wheel and which may be turned to the right and to the left by the operator. Within the box 1 and upon the inner end of the shaft 2, there is fast a gear 4 meshing with an idler pinion 5 fast upon a stud shaft 6 that is mounted in suitable bearings 7, 7′ within the box. Upon said stub shaft there is fast a second idler pinion 8 meshing with a gear 9 mounted upon a suitable stud shaft 10 in bearing 10′, and having radially extending therefrom a crank-like switch arm 11 which has a to and fro swinging movement along the face of the arc or segment 12 supported upon the walls of the box in any suitable manner. It will be observed that the connection between the wheel 3 and the switch 11 is such that upon movement of the

wheel 3 to the right; that is, in a clockwise direction, the switch 11 is swung to the left; that is, in a clockwise direction viewing Fig. 2; and upon movement of said wheel 3 to the right,—that is, in a contraclockwise direction, the switch 11 is moved toward the left, viewing Fig. 2,—that is, in a contraclockwise direction along the said arc 12.

I shall describe my invention with particular reference to the steering of the vessel, and shall therefore refer to the turning movements thereof to the right or to the left as typifying the functioning movements that may be effected, although I desire it to be understood that my invention is not to be limited thereto, but may be employed in effecting other functioning movements. In turning the vessel to the right or to the left by that particular type of mechanism herein disclosed, I provide for transmitting certain numbers of impulses, as will be hereinafter more fully set forth, and in accordance with which the turning functions are effected.

For this reason, I provide means whereby different numbers of contacts may be secured by differentiated movements of the switch 11, and I preferably accomplish this result by providing movable contact members associated with the arc 12.

The arc 12 is formed of insulating material, but has mounted therein or suitably connected thereto a series of contacts which are, in Figs. 3, 5 and 6, represented at A, B, C, D, E and F. Two of these contacts, namely A and F, are fixedly mounted in the arc 12 and extend to the outer face thereof, so that the switch 11 will contact therewith upon movements thereof toward the right and toward the left respectively. The contacts B, C, D and E are movable and are adapted to be projected through openings *a*, *b*, *c*, *d* in said arc, so that when projected therethrough, the switch 11 may contact therewith upon suitable movement of the latter. Said contacts B, C, D and E are formed as slides which are mounted for in and out movement in a suitable fixed member 13 of insulating material, or having insulating portions. Axially in line with and at the rear of said contacts B, C, D and E are positioned springs 14, 15, 16 and 17, the function whereof when compressed is to move said contacts forward, so that their front faces are exposed in the path of movement of the switch 11. The springs 14, 15, 16 and 17 are provided with axial guides 14′, 15′, 16′, 17′, which are loosely mounted in plates 18, 19, suitably guided for in and out movement and normally pressed forward by springs 20, 21, that are of greater strength than the springs 14, 15, 16, 17. Said springs 20, 21 therefore normally serve to compress the springs 14, 15, 16 and 17 and thereby to hold the contacts B, C, D and E in their extreme forward positions.

Each of the springs 20, 21 may be mounted upon a suitable guide or plunger having movement in sockets 22, 23 extending inwardly from the rear face of the box 1.

Upon the inner face of the arc 12, I mount insulating slides 24, 25 respectively provided with openings 26, 27, 26′, 27′, through which the slides B, C, D and E are respectively projected when said openings are brought into register with the openings *a*, *b*, *c* and *d* in the arc 12. Upon the inner or adjacent ends of the insulating slides 24, 25 I pivot triggers 28, 29. Said triggers project below the arc 12 forwardly into the path of movement of the switch 11 and normally hold the latter in neutral position therebetween, as indicated in Figs. 2 and 5. Each of said triggers is connected by a slight coil spring 30, 31 with a pin 32, 33 upon the inner face of said slides, thereby tending to hold said triggers in a position normal to said slides. Said slides are also connected by springs 34, 35 to the ends of the guide 13, so as normally to move said insulating slides 24, 25 into such position that the openings therein are out of register with the openings *a*, *b*, *c*, *d* of the arc 12. It will thus be observed that the position of the insulating slides 24, 25 determines the position of the sliding contacts B, C, D, E so that either pair of contacts B, C and D, E may be held in the path of movement of the switch 11 or held out of the path of movement thereof.

I provide suitable means to effect the rearward movement of the plates 18, 19 through the instrumentality of the switch 11, thereby to compress the springs 20, 21, and therefore to permit the springs 14, 15, 16, 17 to expand, so that the movement of the insulating slides 24, 25, which will carry the openings thereof out of register with the openings *a*, *b*, *c*, *d* will assist the now expanded springs 14, 15, 16 and 17 in moving said sliding contacts B, C, D and E out of the path of movement of the switch 11. The expansion of the springs 14, 15, 16 and 17 assists in the retracting movement of said contacts, which are herein represented as having tapered forward ends with which the walls of the openings of the insulating slides co-act in wedging said contacts rearwardly.

While for this purpose I may provide any suitable mechanism, I have herein represented bell crank levers 36, 37, 38, 39 suitably mounted for rotative movement in the box 1 and having terminal projections 40, 41, 42, 43, extending into the path of movement of the switch 11, so that when said switch contacts with said arms, the said bell crank levers are respectively rotated. The lower ends of said bell crank levers are re-

spectively connected by links 44, 45, 46, 47 to wedges 48, 49, 50, 51 that are mounted in suitable guideways upon the inner faces of the plates 18, 19 for movement toward and from the median line of said plates. The said links 44, 45, 46, 47 may be pivotally connected to said wedges, so as to permit the necessary relative movement therebetween.

In advance of said plates 18, 19 and upon suitable brackets or arms, I position fixed abutments 52, 53, 54, 55 between which and the said plates 18, 19, the said wedges are adapted to move. Comparing Figs. 5 and 6 with Fig. 3, it will be evident that when any wedge is moved toward the median line of its plate 18 or 19, the said plate is forced backwardly and the other wedge co-acting with said rearwardly moved plate is moved or carried backwardly, such movement being caused by the guiding connections between the plates and wedges and being permitted by the loose connection between the several wedges and their connecting links.

The switch 11 is connected by a wire 56 to ground at 57 and the contacts A to F inclusive are connected by wiring diagrammatically indicated at 58 to a battery 59 and relay 60 back to ground at 61. By the described or any other suitable wiring and which need not be more fully illustrated, the circuit will be closed upon contact of the switch 11 with any one of said contacts A to E inclusive. The relay 60, when thus energized, will operate the transmitting key or device at the sending station, and will therefore effect the transmission of radiant energy preferably of a single wave frequency, and in any suitable manner, for the purpose of effecting the functioning movements at the moving body to which I have referred.

Having thus described the construction of the representative embodiment of my invention so far as the transmitting apparatus is concerned, I will now describe the represented means for effecting the steering of the vessel, such steering means being chosen as typifying certain of the functioning movements at or of the moving body. The hull of the vessel is indicated at 62 in Fig. 8. Thereon I mount an open, oscillatory, receiving circuit at 63, this being connected to the winding 64 of a closed, oscillatory circuit of any suitable type, and shown as having therein condensers 65, 66 and a suitable detector 67 for electrical oscillations, and which may be a crystal rectifier. At 68, I have represented a sensitive relay or other contact making device. At 69 I have represented a relay circuit having therein a battery 70. The said relay circuit is provided with a solenoid 71, the plunger 72 of which is provided with a pawl-like end or portion 73 adapted upon energization of the solenoid to engage a tooth of the ratchet 74 and impart rotative movement thereto. The ratchet 74 is mounted coaxially with a gear 75 upon a suitable stud 76. The gear 75 meshes with a pinion 77, which, as represented in Fig. 9, is fast upon a disk or wheel-like governor 78 that is mounted in a suitable casing 79 upon the hull of the vessel and is rotatable in a unidirectional manner. The governor 78 is provided with a central socket within which is stationarily mounted a tube or member 80 having therein an inlet 81 for compressed motive fluid, such for example as air, and an exhaust 82 therefor. The said inlet 81 is connected with any suitable reservoir of fluid or liquid under pressure, or if desired with a suitable vacuum chamber. The passages 81, 82 have laterally extending inner ends 83, 84 which may be brought into register with radial passages 85, 86 in the disk or governor 78. Extending through the casing 79 is a series of pipes 87, 88, 89, 90, which, as represented in Figs. 7 and 8, communicate with opposite ends of a cylinder 91 having therein a piston 92, the piston rod 93 of which is connected to the steering mechanism of the vessel. The pipes 87 and 88 are inlet pipes and the pipes 89, 90 are outlet pipes. Upon movement of the piston 92 toward the right, viewing Fig. 8, the steering mechanism is moved to the right, so as to turn the vessel to the right or starboard, and upon the movement of the piston toward the left the vessel is moved toward the left or to port.

In the position of the governor or disk 78 that is shown in Fig. 7, the passages 85, 86 are in neutral positions, but upon rotative movement of said disk or governor in a clockwise direction through ninety degrees, the passage 85 will be brought into register with the pipe inlet 88 and the passage 86 into register with the exhaust pipe 90, the said passage 85 being at the same time brought into register with the inlet passage 81, and the passage 86 being at the same time brought into register with the exhaust passage 82, thus the piston 92 will be moved toward the right and the vessel turned to the right or starboard. Upon movement in a contraclockwise direction through one hundred and eighty degrees from the active position just referred to, the passage 85 will be brought into register with the exhaust pipe 89 and the passage 86 into register with the inlet pipe 87, the said passage 85 at the same time being brought into register with the exhaust passage 82 and the passage 86 being at the same time brought into register with the inlet passage 81. Thereupon the piston 92 will be moved to the left and the vessel turned to the left or port.

It will therefore be observed that upon movement of the governor to the right, and dependent upon the extent of rotative move-

ment thereof, compressed motive fluid is admitted to one side or the other of the piston 92 and is simultaneously exhausted from the other side of said piston. As previously stated, I may operate with suction instead of through a compressed fluid, and may therefore establish a vacuum or partial vacuum at either side of the piston 92.

Viewing Fig. 7, it will be observed that the governor has two neutral positions and two active positions, and that a movement through ninety degrees of said governing member is sufficient to move the same from a neutral position to active position, and vice versa. The gearing is such that upon a single energization of the solenoid 71, the governor 78 is moved through ninety degrees to effect a change from neutral to active position or the reverse.

When the parts are in the position shown in Fig. 5, the contacts B, C, D and E are all out of the path of movement of the switch 11, so that upon movement of said switch to the left or to the right, it will make contact only with the contacts A or F, as the case may be. Assuming that the switch be moved toward the right, viewing Fig. 2, it will make contact with the fixed contact F, the circuit will be closed through the battery 59 and the relay 60 will be energized as described so that a single impulse of radiant energy will be sent out from the transmitting station. Preferably I employ a single wave frequency, though within the scope of my invention, I may employ different wave lengths respectively generated or transmitted by reason of the engagement of the switch with the several contacts.

Assuming that the position of the governor 78 is such that motive fluid is being admitted through the inlet pipe 87 and the vessel is being turned to port, if now it be desired to stop turning the vessel to port, a single impulse will be transmitted from the sending station, and it will cause a movement of the governor 78 through ninety degrees, thus bringing said governor into a neutral position. Another impulse from the sending station will move the governor into such a position that the vessel will be turned to starboard, and still another impulse will move the governor into a neutral position. If it be desired to cause the vessel to turn back to port after the governor has passed from the port position to a neutral position, three impulses are necessary to accomplish this result. The first impulse will place the governor in the starboard position, the second will place it in a neutral position, and the third will bring it again to port position, thus again turning the vessel to port. It will be understood that the said three impulses may be sent in rapid succession, so as to effect the desired turning of the vessel to port.

Referring to Fig. 5, wherein the switch 11 is shown in neutral position, and wherein the contacts D and E are held back out of the path of said switch, if now the switch be swung to the right, it will make contact with the fixed contact F, the trigger 29 yielding for this purpose. This will cause an electrical circuit to be closed and will energize the relay 60, so as thereby to operate the transmitting key at the radio station and to send out a single impulse, as for example a single train of waves. It is assumed that the position of the governor 78 is such that the vessel will thereby be moved to starboard or in other words that motive fluid is, in such position of the governor, admitted through the inlet pipe 88. On desiring to bring back the vessel to centre, the switch 11 will be moved toward the left and will again make contact with the fixed contact F, sending another impulse, thus turning the governor 78 through ninety degrees and bringing it to neutral position. On its movement toward said central position, the switch 11 will engage the trigger 29 and will cause the latter to move the insulated slide 25 so as to permit the contacts D and E to move forward under pressure of the springs 16, 17, so that said contacts D and E are now in the path of movement of said switch. Inasmuch as trigger 29 is pivoted on slide 25, the pressure of the switch 11 upon the trigger at the right hand face thereof will move the slide 25 to the left until it contacts with the stop to be hereinafter referred to, after which the trigger yields to permit the passage of switch 11. If now it be desired to steer the vessel in the opposite direction, the switch 11 is moved still further toward the left, passing by the contacts B and C, and which are out of the path of movement of the switch 11 and will make contact with the fixed contact A, thus again closing the circuit and effecting the transmission of another impulse, thereby causing the governor 78 to move to such position as to effect the turning of the vessel to port. If, however, it had been desired instead of turning the vessel to port, to have turned it further to starboard, this result may be obtained by moving the switch 11 to the extreme right hand side of the arc 12. In so moving, the switch 11 will make contact with the contacts D and E, which, it will be remembered, were allowed to move forward through the engagement of the switch 11 with the trigger 29. As the said switch 11 engages the contact D, a third impulse will be sent out and the governor 78 will be brought to the port position. Upon the switch 11 engaging the contact E, the governor will be turned ninety degrees to a neutral position, and upon its engagement with the contact F, it will be turned through another ninety degrees, so as to turn the vessel to starboard. Upon continued

movement of the switch 11, it will reach a point where it will engage the projections 42, 43 of the bell crank levers 38, 39. Through the instrumentality of the bell crank lever 39, the plate 19 will be forced back, thereby releasing the pressure of the springs 16 and 17 upon the contacts D and E, thereby permitting the now expanded springs 16 and 17 to move said contacts out of the path of the switch 11. The bell crank lever 38 will also be moved to cause the wedge 49 to accomplish the same result with the slides B and C. Corresponding movement of the switch 11 toward the left will cause movement of the wedges 48 and 50, through the instrumentality of the bell crank levers 36 and 37. It will thus be observed that through the movement of the switch 11 toward the right or toward the left, the requisite number of impulses may be transmitted to effect the turning of the vessel to starboard or to port, it being borne in mind that when the vessel has been turned to starboard or to port, three impulses must be sent in succession to turn the vessel further in the same direction. If the vessel be turned to starboard or to port, the sending of a single impulse will bring the governor into a neutral position, and thus bring the vessel to a central position and the sending of another impulse will reverse the operation. Preferably I employ a spring 94 connecting the triggers 28, 29, so as to cause movement of each trigger to move its corresponding slide toward the centre of the box but yielding to permit proper movement of the switch 11 as heretofore set forth, and I also provide stops 95, 96 to prevent over movement of said slides, thus holding them when in their innermost position with their openings in register with the corresponding openings in the arm 12. The several springs 30, 31, 32, 35 and 94 are in effect balancing springs.

While preferably I employ fluid or liquid-operated or controlled means between the governor and the steering means or other functioning means, I may employ any other suitable operating or controlling means therebetween.

Having thus described one illustrative embodiment of my invention, I desire it to be understood that although specific terms are employed, they are used in a generic and descriptive sense and not for purposes of limitation, the scope of the invention being set forth in the following claims.

Claims.

1. In a system for controlling the operation of moving bodies at a distance by radiant energy, the combination of a wheel mounted to turn in either direction, a pivoted switch, connections between the wheel and switch to enforce corresponding movements of said parts, a plurality of contacts with which said switch may engage upon movement to the right or to the left, and means controlled by the movement of said wheel to move one or more of said contacts out of the path of said switch.

2. In a system for controlling the operation of moving bodies at a distance by radiant energy, the combination of a wheel mounted to turn in either direction, a pivoted switch, connections between the wheel and switch to enforce corresponding movements of said parts, a plurality of contacts with which said switch may engage upon movement to the right or to the left, means controlled by said switch to move one or more of said contacts out of the path of movement of said switch, and connections from said contacts for transmitting radiant energy.

3. In a system for controlling the operation of moving bodies at a distance by radiant energy, the combination of a wheel mounted to turn in either direction, a pivoted switch, connections between the wheel and switch to enforce corresponding movements of said parts, a plurality of contacts with which said switch may engage upon movement to the right or to the left, and means operative by movement of said switch to move one or more of said contacts out of the path of said switch.

4. In a system for controlling the operation of moving bodies at a distance by radiant energy, the combination of a wheel rotatable in either direction, a pivoted switch, connections between said wheel and switch to compel corresponding movements of the latter, two fixed contacts in the path of movement of said switch and at opposite sides of a neutral position thereof, one or more movable contacts at opposite sides of the neutral position of said switch, and means controlled by said switch to render said movable contacts inoperative.

5. In a system for controlling the operation of moving bodies at a distance by radiant energy, the combination of a wheel rotatable in either direction, a pivoted switch, connections between said wheel and switch to compel corresponding movements of the latter, two fixed contacts in the path of movement of said switch and at opposite sides respectively of a neutral position thereof, one or more movable contacts at opposite sides of the neutral position of said switch, means controlled by said switch to render said movable contacts inoperative, and connections from said contacts for transmitting radiant energy.

6. In a system for controlling the operation of moving bodies at a distance by radiant energy, the combination of a wheel movable in either direction, a pivoted switch, connections between the wheel and switch, one or more contacts at opposite sides of the neutral position of said switch,

means tending normally to maintain said contacts in the path of movement of said switch, and means co-acting with said first mentioned means to remove one or more of said contacts from said path of movement.

7. In a system for controlling the operation of moving bodies at a distance by radiant energy, the combination of a pivoted switch, means to swing the same in either direction, a plurality of contacts at each side of the neutral position of said switch, springs tending normally to hold said contacts in the path of movement of said switch, and means co-acting with said springs to effect the withdrawal of said contacts.

8. In a system for controlling the operation of moving bodies at a distance by radiant energy, the combination of a pivoted switch, means to swing the same in either direction, a plurality of contracts at each side of the neutral position of said switch, springs tending normally to hold said contacts in the path of movement of said switch, and means co-acting with said springs and rendered operative by said switch to effect the withdrawal of said contacts.

9. In a system for controlling the operation of moving bodies at a distance by radiant energy, the combination of a pivoted switch, one or more movable contacts at each side of the neutral position of said switch, means co-acting with said contacts to position them in the path of movement of said switch, and movable insulating members controlled by said switch to determine the active or inactive positioning of said contacts.

10. In a system for controlling the operation of moving bodies at a distance by radiant energy, the combination of a switch movable in opposite directions, one or more movable contacts at opposite sides of the neutral position of said switch, means co-acting with said contacts to maintain them in the path of movement of said switch, and movable insulating members controlled by said switch to determine the active or inactive positioning of said contacts.

11. In a system for controlling the operation of moving bodies at a distance by radiant energy, the combination of a pivoted switch, one or more movable contacts at opposite sides of the neutral position of said switch, means co-acting with said contacts to hold them in the path of movement of said switch, and insulating slides controlled by said contacts and transversely of which said contacts are movable into active and inactive position.

12. In a system for controlling the operation of moving bodies at a distance by radiant energy, the combination of a pivoted switch, one or more movable contacts at each side of the neutral position thereof, means co-acting with said contacts to hold them in the path of movement of said switch, and a pair of insulated slides movable transversely to the path of movement of said contacts to determine the active or inactive positioning thereof.

13. In a system for controlling the operation of moving bodies at a distance by radiant energy, the combination of a pivoted switch, one or more movable contacts at each side of the neutral position thereof, means co-acting with said contacts to hold them in the path of movement of said switch, a pair of insulated slides movable transversely to the path of movement of said contacts to determine the active or inactive positioning thereof, and means for effecting movement of said slides by said switch.

14. In a system for controlling the operation of moving bodies at a distance by radiant energy, the combination of a pivoted switch, a plurality of movable contacts at opposite sides of the neutral position thereof, insulated slides at opposite sides of said neutral position, triggers connected to said slides and extending into the path of movement of said switch, and means co-acting with said slides normally to hold said triggers in the path of movement of said switch.

15. In a system for controlling the operation of moving bodies at a distance by radiant energy, the combination of a switch having a to and fro movement, one or more movable contacts at opposite sides of the neutral position thereof, means for holding said contacts in the path of movement of said switch, and wedge means operable through the instrumentality of said switch to permit the withdrawal of said contacts from the path of movement of the switch.

16. In a system for controlling the operation of moving bodies at a distance by radiant energy, the combination of a switch having a to and fro movement, a fixed contact and a movable contact at opposite sides of the neutral position thereof, means for holding said movable contacts in the path of movement of the switch, and means operable through the instrumentality of said switch for permitting the withdrawal of said movable contact from the path of movement of the switch.

17. In a system for controlling the operation of moving bodies at a distance by radiant energy, the combination of a body to be propelled having guiding means movable in contrasting directions, a governor having a unidirectional movement, means responsive to radiant energy from a distance to move said governor, fluid connections between said governor and said guiding means, and means at a distant control station movable in predetermined contrasting directions to effect, by said contrasting movements, the transmission of radiant energy to said responsive means.

18. In a system for controlling the operation of moving bodies at a distance by radiant energy, the combination of a body to be propelled having guiding means movable in contrasting directions, a governor rotatable in one direction only, compressed fluid connections between said governor and said guiding means, a solenoid for moving said governor, means responsive by radiant energy to energize said solenoid, and means at a distant control station movable in predetermined contrasting directions to effect, by said contrasting movements, the transmission of radiant energy to said moving body, thereby to rotate said governor.

19. In a system for controlling the operation of moving bodies at a distance by radiant energy, the combination of a wheel mounted to turn in either direction, a pivoted switch, connections between the wheel and switch to enforce corresponding movement of said parts, a plurality of contacts with which said switch may engage by movements to the right or left, and means controlled by said switch to move one or more of said contacts out of the path of said switch.

20. In a system for controlling the operation of moving bodies at a distance by radiant energy, the combination of a wheel rotatable in either direction, a pivoted switch, connections between said wheel and switch to compel corresponding movements of the latter, two fixed contacts in the path of movement of said switch and at opposite sides respectively of a neutral position thereof, one or more movable contacts at opposite sides of the neutral position of said switch, means controlled by the movement of the switch to render said movable contacts inoperative, and connections from said contacts for transmitting radiant energy.

21. In a system for controlling the operation of moving bodies at a distance by radiant energy, the combination of a member movable in contrasting directions, a switch, connections between the wheel and switch, one or more contacts at opposite sides of the neutral position of said switch, means tending normally to maintain said contacts in the path of movement of said switch, and means co-acting with said first mentioned means to remove one or more of said contacts from said path of movement.

22. The combination of a wheel movable in either direction, a pivoted switch, connections between the wheel and switch, one or more contacts at opposite sides of the neutral position of said switch, means tending normally to maintain said contacts in the path of movement of said switch, and means co-acting with said first mentioned means to remove one or more of said contacts from said path of movement.

23. In a system for controlling the operation of moving bodies at a distance by radiant energy, the combination of a movable switch, one or more movable contacts, means cooperating with said contact or contacts to position each of them in the path of movement of the switch, and means controlled by said switch to determine the active or inactive positioning of said contacts.

24. In a system for controlling the operation of moving bodies at a distance by radiant energy, the combination of a pivoted switch, a contact, means cooperating with said contact to hold it in the path of movement of said switch, and a slide movable transversely to the path of movement of said contact to determine the active or inactive positioning thereof.

25. In a system for controlling the operation of moving bodies at a distance by radiant energy, the combination of a pivoted switch, a contact, means cooperating with said contact to hold it in the path of movement of said switch, a slide movable transversely to the path of movement of said contact to determine the active or inactive positioning thereof, and means for effecting movement of said slide by said switch.

26. In a system for controlling the operation of moving bodies at a distance by radiant energy, the combination of a switch having a to and fro movement, a fixed contact and a movable contact, means for holding said movable contact in the path of movement of the switch, and means operable through the instrumentality of said switch for permitting the withdrawal of said movable contact from the path of movement of the switch.

27. The combination with an element movable in a predetermined path of a plurality of contacts with which said element may engage, means for transmitting radiant energy arranged to be energized as a result of the engagement of said switch with any one of said contacts, and means controlled by the movement of said switch to move one of said contacts out of operative position.

28. In a radio system for controlling the direction of movement of a movable body, the combination with a movable body of means carried thereby and responsive to radiant energy for steering said body selectively in different directions, and means spaced from said body for transmitting radiant energy to steer said body, said last-mentioned means including a switch movable in different directions, and a contact arranged to be actuated as a result of the movement of said switch to move said contact either into or out of the path of said switch.

29. In a radio system for controlling the direction of movement of a movable body, the combination with a movable body of means carried thereby and responsive to ra-

diant energy for steering said body respectively in different directions, and means spaced from said body for transmitting radiant energy to steer said body, said last-mentioned means including a switch movable about a fixed axis in different directions, and a contact arranged to be actuated as a result of the movement of said switch to move said contact either into or out of the path of said switch.

30. A transmission system for radiant energy comprising a switch arranged to be moved in different directions, a contact arranged to be moved either into or out of the path of said switch as a result of the movement of said switch, and means controlled by the cooperation of said switch and said contact for transmitting radiant energy.

31. A transmission system for radiant energy comprising a switch arranged to be rotated in different directions, a contact arranged to be moved either into or out of the path of said switch as a result of the movement of said switch, and means controlled by the cooperation of said switch and said contact for transmitting radiant energy.

32. In a radio system for controlling the direction of movement of a movable body, the combination with a movable body, of means carried thereby and including an element movable step by step in one direction through a plurality of steps responsive to radiant energy for steering said body, and means spaced from said body for transmitting radiant energy to steer said body, said means including a controlling element movable either in one direction or in a different direction from a neutral position to cause said body to be steered either in one direction or in a different direction depending upon the movement of said controlling element.

33. In a radio system for controlling the direction of movement of a movable body, the combination with a movable body, of means carried thereby including an element rotatable step by step in one direction through a plurality of steps responsive to radiant energy for steering said body, and means spaced from said body for transmitting radiant energy to steer said body, said means including a controlling element movable either in one direction or in a different direction from a neutral position to cause said body to be steered either in one direction or in a different direction depending upon the movement of said controlling element.

34. In a radio system for controlling the direction of movement of a movable body, the combination with a movable body of means carried thereby and responsive to radiant energy for steering said body selectively in different directions, and means for transmitting radiant energy to steer said body, said last-mentioned means including a switch movable in different directions, and a contact arranged to be actuated as a result of the movement of said switch to move said contact either into or out of the path of said switch.

35. In a radio system for controlling the direction of movement of a movable body, the combination with a movable body of means carried thereby and responsive to radiant energy for steering said body respectively in different directions, and means for transmitting radiant energy to steer said body, said last-mentioned means including a switch movable about a fixed axis in different directions, and a contact arranged to be actuated as a result of the movement of said switch to move said contact either into or out of the path of said switch.

36. In a radio system for controlling the direction of movement of a movable body, the combination with a movable body, of means carried thereby and including an element movable step by step in one direction in response to radiant energy to rotate said body selectively either in one direction or in an opposite direction about a given axis depending upon the position of said element, and means for transmitting radiant energy including an element movable selectively in different directions from an initial position, said element being operative whenever moved from said initial position to cause said body to be rotated either in one direction or in an opposite direction about said axis, depending upon the direction of movement of said element from said initial position.

37. In a radio system for controlling the direction of movement of a movable body, the combination with a movable body, of means carried thereby and including a member movable step by step through more than two steps in one direction in response to radiant energy to rotate said body selectively either in one direction or in an opposite direction about a given axis depending upon the position of said member, and means for transmitting radiant energy including an element movable selectively in different directions from an initial position, said element being operative whenever moved from said initial position to cause said body to be rotated either in one direction or in an opposite direction about said axis, depending upon the direction of movement of said element from said initial position.

38. In a radio system for controlling the direction of movement of a movable body, the combination with a movable body, of means carried thereby and including an element movable step by step in one direction through a plurality of steps responsive to radiant energy for steering said body, and means for transmitting radiant energy to

steer said body, said means including a controlling element movable either in one direction or in a different direction from a neutral position to cause said body to be steered either in one direction or in a different direction depending upon the movement of said controlling element.

In testimony whereof, I have signed my name to this specification, in the presence of two subscribing witnesses.

JOHN HAYS HAMMOND, JR.

Witnesses:

FRANCIS BENNETT,

MAY H. LOWRY.