United States Patent [19]

Wehmeyer

[11] **Patent Number: Des. 315,940**

[45] **Date of Patent: ** Apr. 2, 1991**

[54] **ROLLER SKATE**

[75] Inventor: **Stephen D. Wehmeyer**, West Falls, N.Y.

[73] Assignee: **The Quaker Oats Company**, Chicago, Ill.

[**] Term: **14 Years**

[21] Appl. No.: **232,572**

[22] Filed: **Aug. 15, 1988**

[52] **U.S. Cl.** **D21/226**

[58] **Field of Search** D21/226-227; 280/11.2, 11.23, 11.19, 11.22, 11.27, 11.28

[56] **References Cited**

U.S. PATENT DOCUMENTS

D. 146,368	2/1947	McCaffrey	D21/226
D. 282,095	1/1986	Robjent et al.	D21/226
D. 289,074	3/1987	Klamer	D21/226
D. 299,259	1/1989	Vullierme	D21/226
3,936,061	2/1976	Wada	280/11.23
4,379,564	4/1983	Welker	280/11.2

Primary Examiner—Charles A. Rademaker
Attorney, Agent, or Firm—Cumpston & Shaw

[57] **CLAIM**

The ornamental design for a roller skate, as shown and described.

DESCRIPTION

FIG. **1** is a perspective view of a roller skate taken from the right front and showing my new design;
FIG. **2** is a right-side elevational view thereof, the left side being substantially a mirror image thereof, except for the uppermost portion which is shown in FIG. **1**;
FIG. **3** is a rear elevational view thereof; and
FIG. **4** is a bottom plan view thereof.

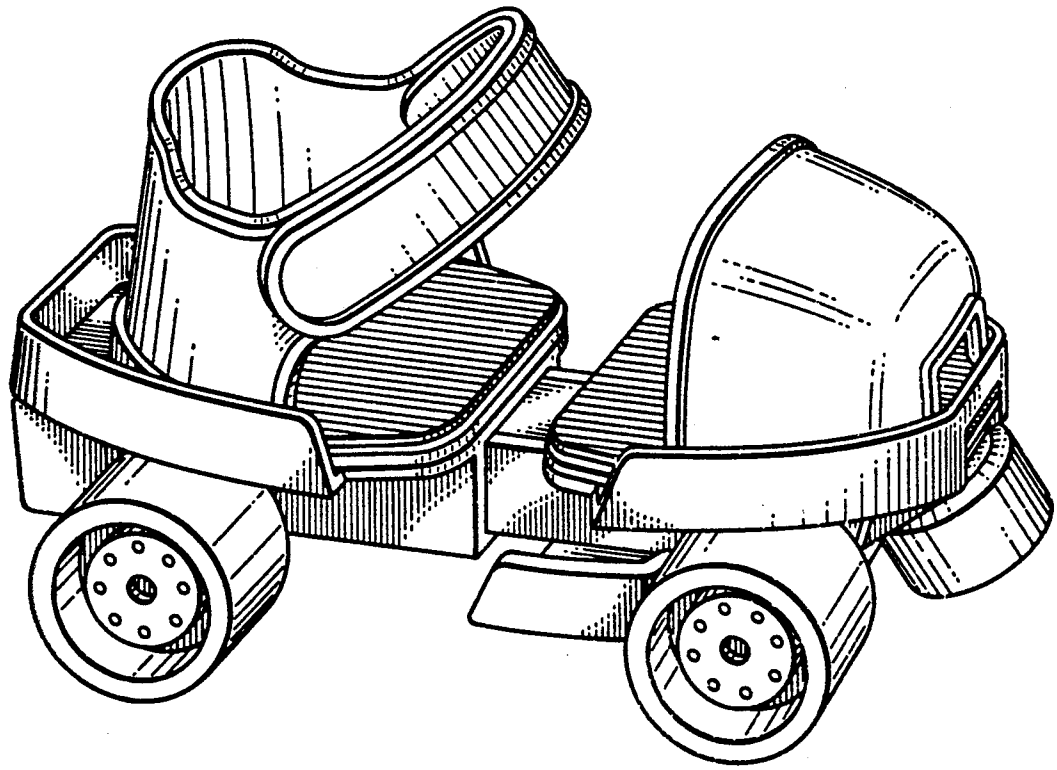

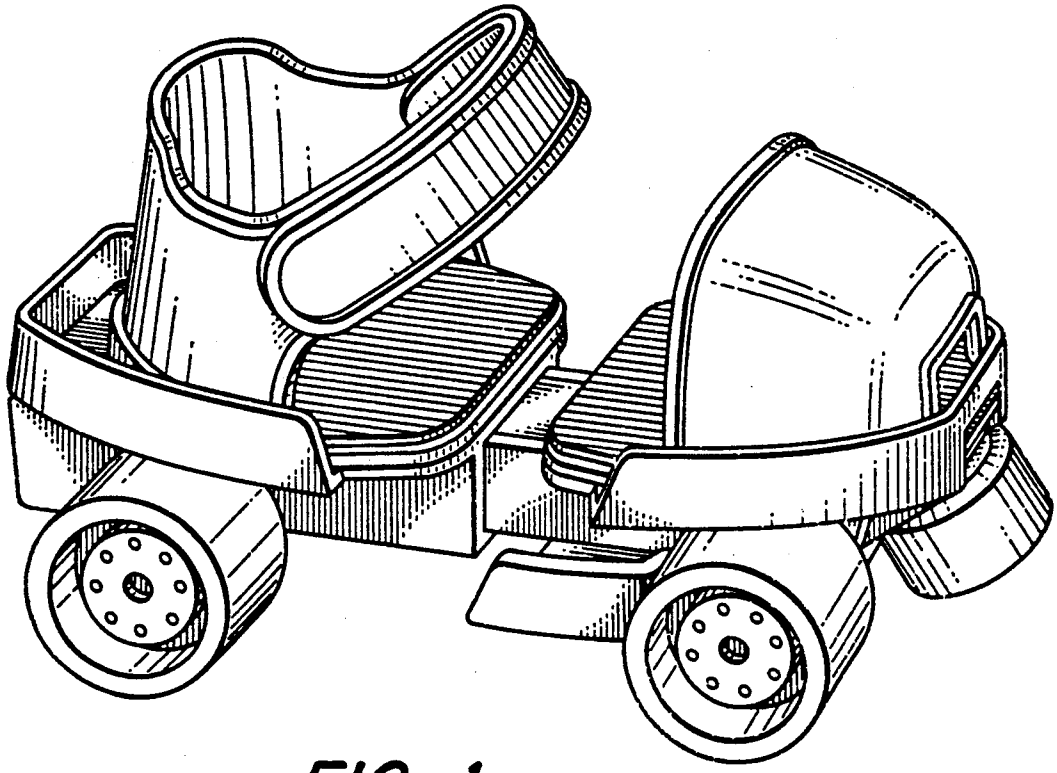

FIG. 1

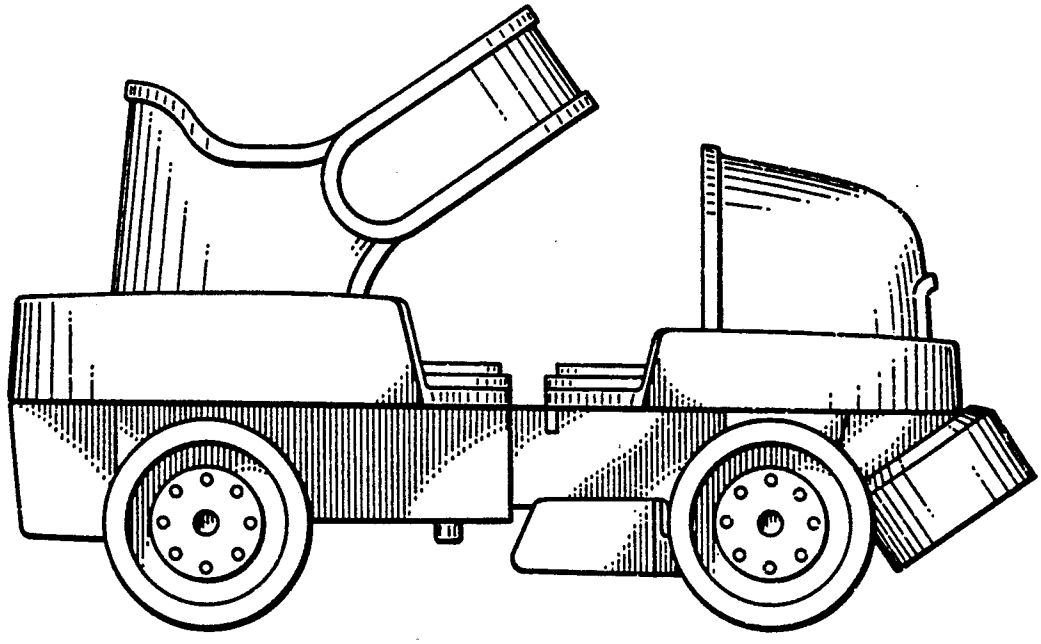

FIG. 2

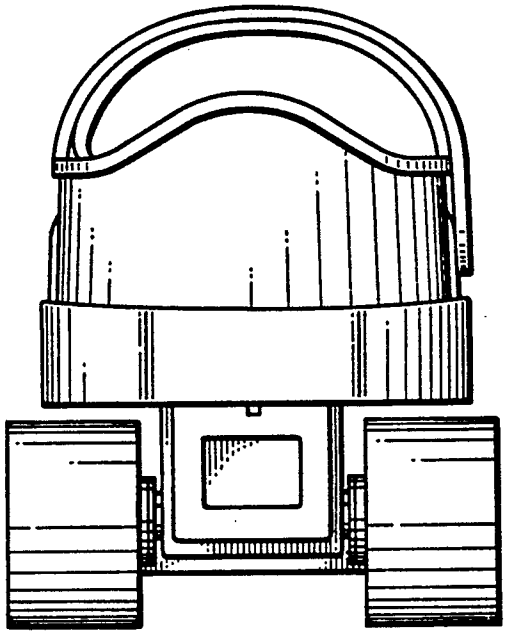

FIG. 3

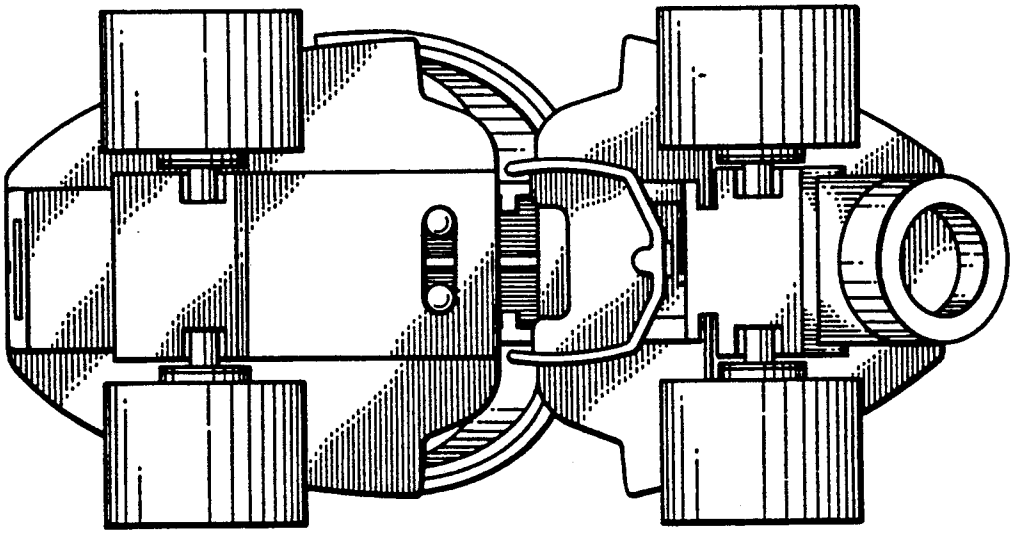

FIG. 4