Aug. 28, 1934. R. A. JONES 1,971,962

SHEET FEEDING DEVICE

Filed July 5, 1933 2 Sheets-Sheet 1

Fig. 1

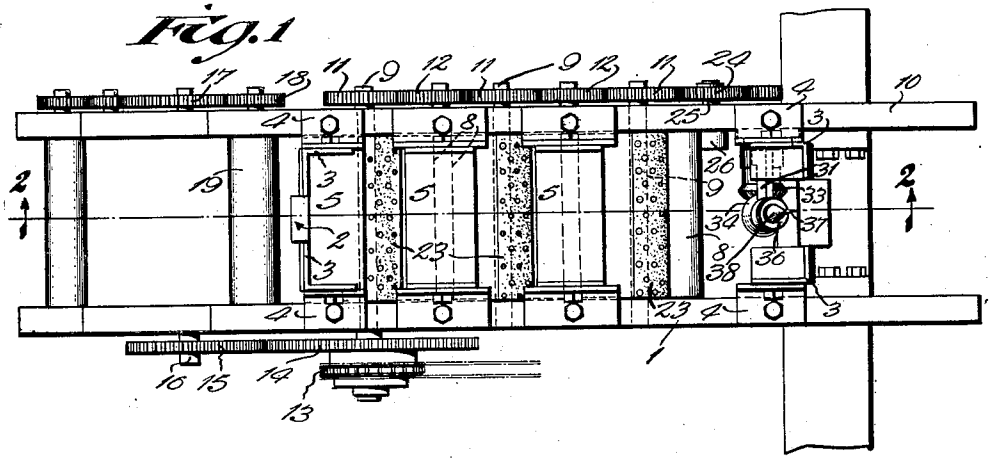

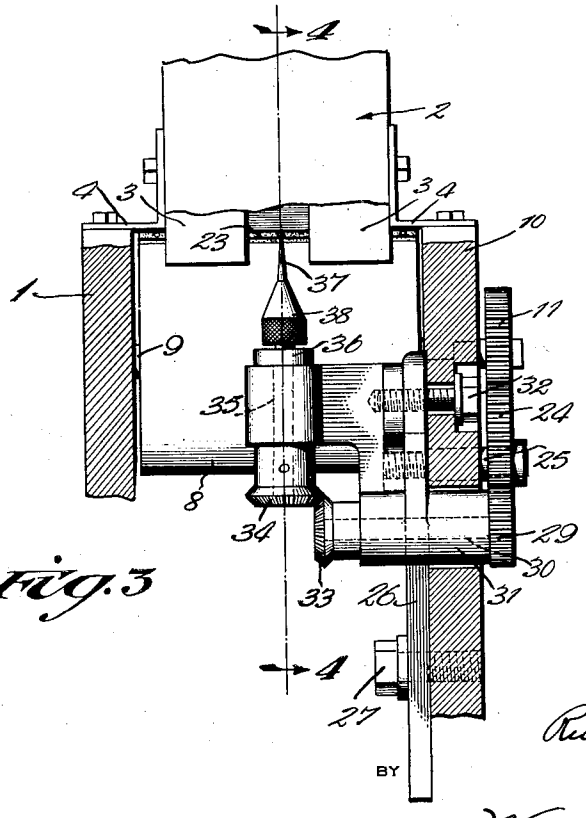

Fig. 3

INVENTOR

Ruel A. Jones

BY

Wood & Wood

ATTORNEYS

Aug. 28, 1934. R. A. JONES 1,971,962

SHEET FEEDING DEVICE

Filed July 5, 1933 2 Sheets-Sheet 2

Fig. 2

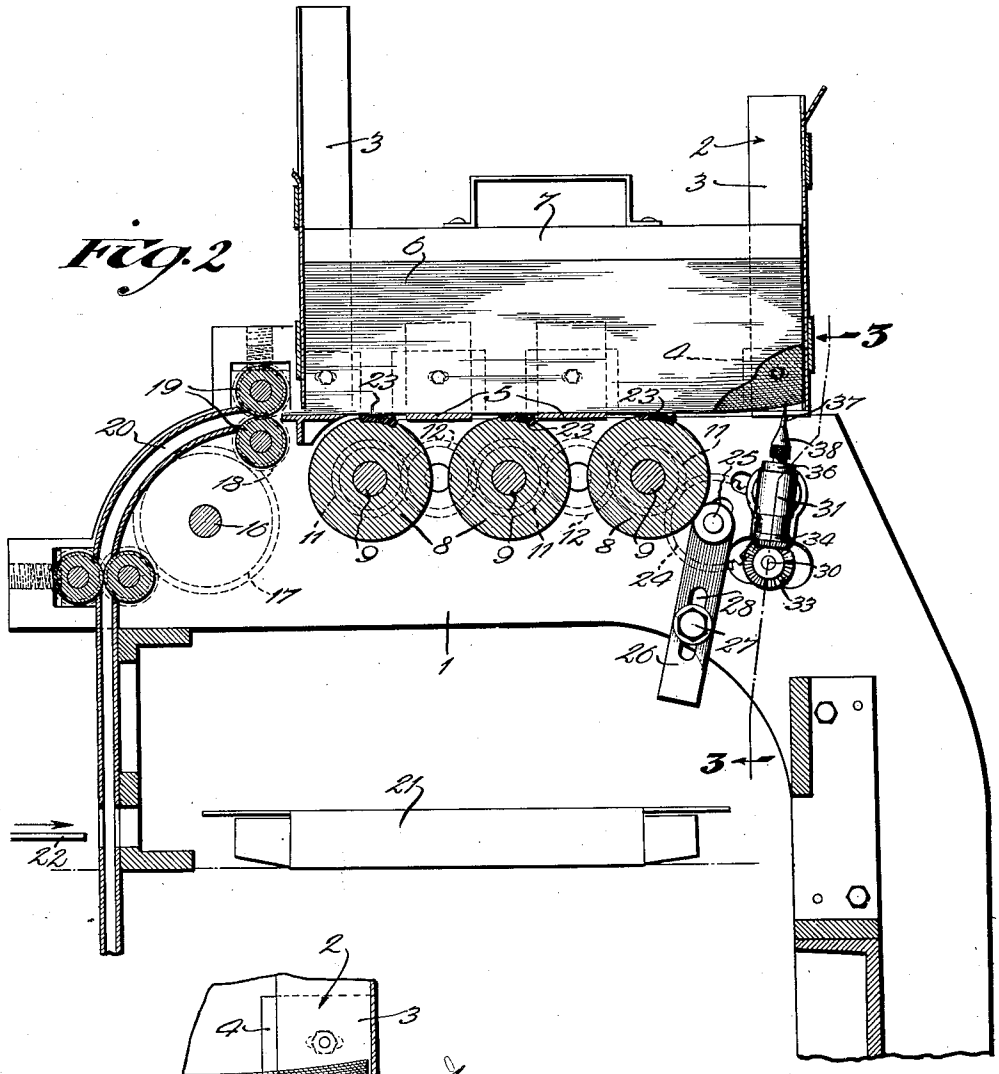

Fig. 4

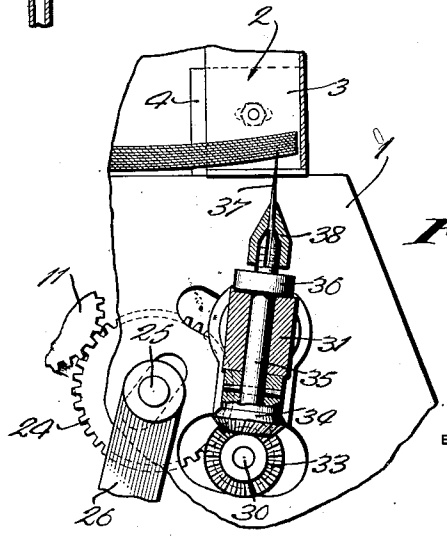

INVENTOR

Ruel A. Jones

BY Wood & Wood ATTORNEYS

Patented Aug. 28, 1934 1,971,962

UNITED STATES PATENT OFFICE

1,971,962

SHEET FEEDING DEVICE

Ruel A. Jones, Covington, Ky., assignor to R. A. Jones & Co., Incorporated, Covington, Ky., a corporation of Kentucky

Application July 5, 1933, Serial No. 679,071

2 Claims. (Cl. 271—41)

This invention relates to improvements in sheet feeding devices for withdrawing or extracting the sheets successively or consecutively from a stack or pile preferably one by one from the bottom of the stack.

In sheet feeding devices to which the present invention is particularly directed, it has been customary to employ a stationary needle or pricking tool for penetrating into several of the sheets, next in order to be extracted to withhold the sheets to prevent the extracting sheet from carrying or pulling therewith the next successive sheet under any frictional or adhesive influence detrimental to a single sheet feed.

An object of the invention is to improve the efficiency of the needle by continuously rotating the same and thereby prevent its point end from collecting or accumulating to its impairment, a quantity of lint or fibre as readily occurs in the use of a stationary needle.

Figure 1 is a top plan view of the improved sheet feeding mechanism.

Figure 2 is a vertical section on line 2—2, Figure 1.

Figure 3 is an enlarged section on line 3—3, Figure 2.

Figure 4 is a section on line 4—4, Figure 3.

The sheet feeding mechanism is particularly adaptable for use as an adjunct to carton filling machines for inserting a printed leaf or leaflet into the carton with the merchandise. The leaves or sheets are successively extracted or withdrawn from beneath the pack or stack of sheets within a magazine or rack from whence they are fed to a position for inserting either individually or jointly with the merchandise into a carton.

In withdrawing or extracting the sheets one after another from the bottom of the stack, preferably by means of one or a plurality of feeding rollers frictionally engaging the lowermost sheet of the stack and to avoid simultaneously advancing two or more sheets it is necessary to apply a retarding pressure or hold on the next superposed sheet to withhold its advance, while the lowermost sheet is being withdrawn, due to the tendency of the sheets adhering together.

In the present instance, the withhold of the sheets is accomplished by a needle pricking several of the lowermost sheets of the pack and from which the lowermost sheet is torn, under its traversing pull imparted thereto by the feed rollers. It has been experienced on the continuous and high speed operations that the point of the needle will collect a small wadding of fibre from the sheets sufficient to destroy its utility and that this objection can be removed as well as insuring a better penetration of the needle into the sheets by continuously rotating the needle.

Referring to the drawings, 1 indicates a side frame of a carton loading machine upon which a rack or magazine 2 for holding a stack or pile of sheets is mounted. The rack preferably is of skeleton structure consisting of angle iron corner sections 3 secured to the machine frame by brackets 4.

A plurality of spaced cross slats 5 providing the base for the rack upon which the stack of sheets 6 are supported and depressed by the weight 7 upon the top of the stack. A plurality of sheet feeding rollers 8 are journalled beneath the rack, each roller fixed upon a shaft 9 journalled in the side frame 1 and a frame section 10 secured to a cross rail of the machine frame. Each feed roller shaft 9 on one end carries a gear 11 and the gear 11 of the respective rollers connected in train by intermediate gears 12. The roller shaft for the first or forward feed roller of the series at its opposite end carries a sprocket wheel 13 as a driver for the transmission gearing of the feeding mechanism, driven from a suitable power source.

A gear 14 fixed upon the shaft adjacent the sprocket wheel 13 is in mesh with a gear 15 upon one end of a shaft 16. The opposite end of the shaft 16 has a gear 17 fixed thereon in mesh with a gear 18 on one end of a shaft of one of a pair of companion feed rollers 19—19, gear connected with their peripheries frictionally engaged under the pressure of a spring or springs engaged against the journal at the opposite end of one of said feed rollers. The pair of feed rollers 19—19 are disclosed at the mouth end of a curved chute 20 for advancing the sheet as it is withdrawn from the rack downwardly to a vertical position for insertion into a carton 21 by a pusher bar 22 as an element of the carton loading mechanism. As illustrated, two pairs or sets of cooperating frictionally engaged feed rollers are provided for continuing the travel or delivery of the sheets from the rack, although various methods and means may be employed for conveying and operating upon the sheets as they are extracted from the rack with which, however, the present invention is not concerned.

Each of the feed rollers 8 of the series, as shown, is provided with an insert section 23 seated in its periphery usually of a rubber material to provide a sectional, frictional surface for the roller for intervally contacting with the lowermost sheet of the stack to advance or feed the same with each revolution of the roller. This likewise is an ex-

pediency in common use in sheet feeding devices. The gear 11 of the end feed roller of the series is in mesh with an idler or intermediate gear 24 journalled upon a stud shaft 25 mounted in the end of a bracket plate 26 adjustably secured to the side frame 1 by means of a screw 27 engaged through an elongated slot 28 in the bracket plate 26. This provides for interchanging the gear 24 with a different diameter gear for a speed change or variation.

The intermediate gear 24 is in mesh with a pinion 29 upon the end of a shaft 30 journalled in a journal bracket 31 adjustably secured and clamped to the side frame 1 by a screw 32 engaged through an elongated slot in the side frame and screw-threaded in the journal bracket 31.

The shaft 30 at its opposite end has a miter pinion 33 fixed thereon in mesh with a miter pinion 34 fixed upon the end of a shaft or spindle 35 journalled in a bearing arm of the bracket 31 and held against longitudinal displacement by a collar or flange 36 on said shaft or spindle. The spindle has its upper end bored, split, and screw-threaded to provide a chuck for removably securing a needle 37 thereon and clamped thereto by a collet 38 screw-threaded on the end of the shaft or spindle. The needle and its spindle are poised slightly at an angle and the point end of the needle extends upwardly into the rack slightly above the plane of the base thereof pricking into several of the lowermost sheets of the stack as illustrated in Figures 2 and 4.

The needle is extremely tapered producing a long and very fine point which will readily penetrate the thickness of several sheets under the load of the stack or weight imposed thereon, and its penetration is also aided by the rotation of the needle so that it will progressively prick through succeeding sheets in the descent of the stack through the successive extraction of the sheets so that at least two of the lowermost sheets will be impaled. The lowermost sheet being in direct contact with the feed rollers, has a greater advancing pull imparted thereto than can be transmitted to the next adjacent superposed sheet through the extracting sheet preventing its traverse with the lowermost sheet and the lowermost sheet being in direct contact with the rollers is torn or pulled from the needle and discharged from the rack of magazine.

The needle in continuous rotation immediately casts off any loose lint or fibre administered under a tear or pull leaving no opportunity for the collection or accumulation of any quantity which would render the needle functionless or impair its utility. An oscillatory motion of the needle is regarded as the equivalent of the rotary herein particularly referred to, or any other action which will prevent a collection or deposit of lint or fibre on the point of the needle.

Having described my invention, I claim:

1. In a sheet feeding device for operating upon the lowermost sheet of a stack or pile for successively extracting the sheets individually, comprising, rotary sheet feeding means for frictional engagement with the lowermost sheet of the pile within a rack to advance and extract the lowermost sheet therefrom, a continuously rotating spindle removably carrying a needle, the needle tapering toward one end to provide an extremely fine point for penetrating several of the lower sheets at the rear end thereof for withholding against extraction, the sheets not directly operated upon by the sheet feeding means, a journal bracket journalling said spindle adjustable for changing the angle of the needle relative to the plane of the sheets, and gearing for transmitting said spindle journalled on said bracket as a unit therewith.

2. In a sheet feeding device for operating upon the lowermost sheet of a stack or pile for successively extracting the sheets individually, comprising, sheet feeding means for frictional engagement with the lowermost sheet of the pile within a rack to advance and extract the lowermost sheet therefrom, a continuously rotating spindle removably carrying a needle, the needle having its point penetrating several of the lower sheets at the rear end thereof for withholding against extraction, the sheets not directly operated upon by the sheet feeding means, a journal for said spindle, adjustable for changing the angle of said needle relative to the plane of the sheets penetrated by the point of the needle, and transmission means for rotating said spindle and needle.

RUEL A. JONES.