(No Model.) 3 Sheets—Sheet 1.

S. H. HARRINGTON.

FIRE EXTINGUISHER FOR CAR HEATERS.

No. 456,289. Patented July 21, 1891.

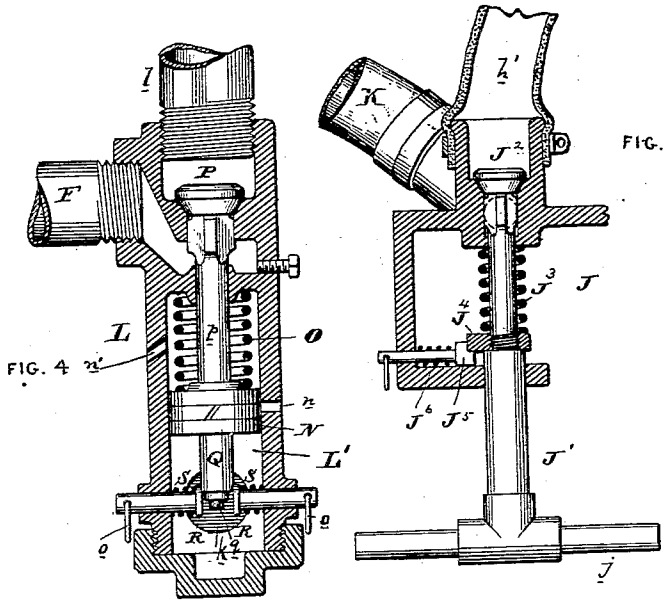

FIG. 4

FIG. 3

FIG. 1

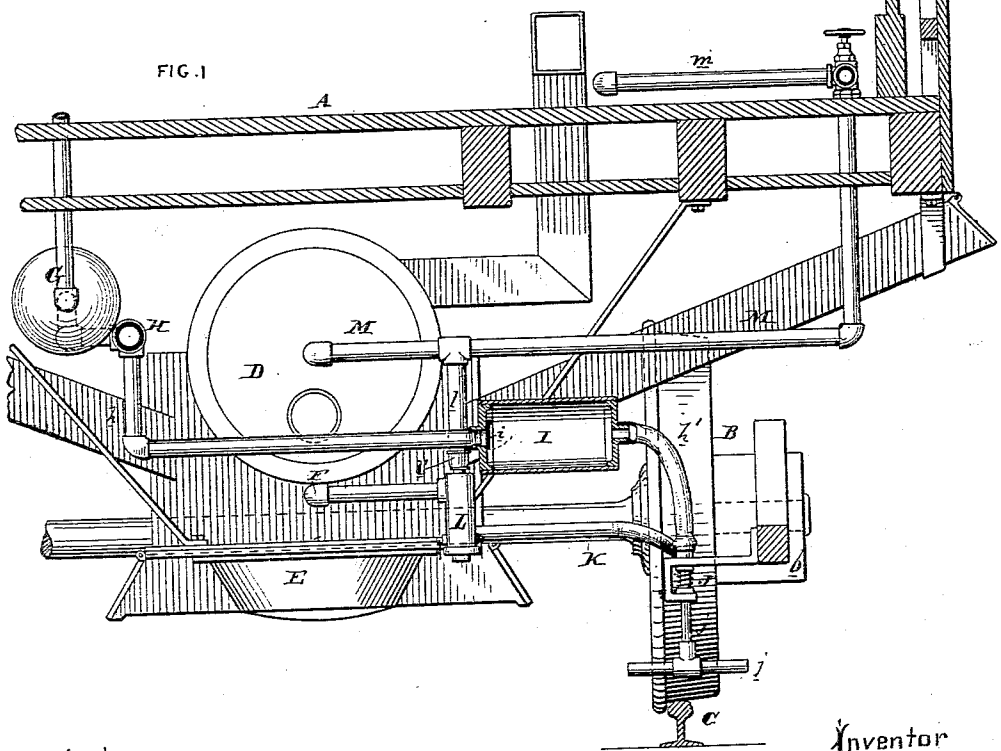

Witnesses
Isaac Norris 3rd
Joshua Wattack Jr.

Inventor
Samuel H. Harrington
by his attorney
Francis T. Chambers

THE NORRIS PETERS CO., PHOTO-LITHO., WASHINGTON, D. C.

(No Model.) 3 Sheets—Sheet 2.

S. H. HARRINGTON.

FIRE EXTINGUISHER FOR CAR HEATERS.

No. 456,289. Patented July 21, 1891.

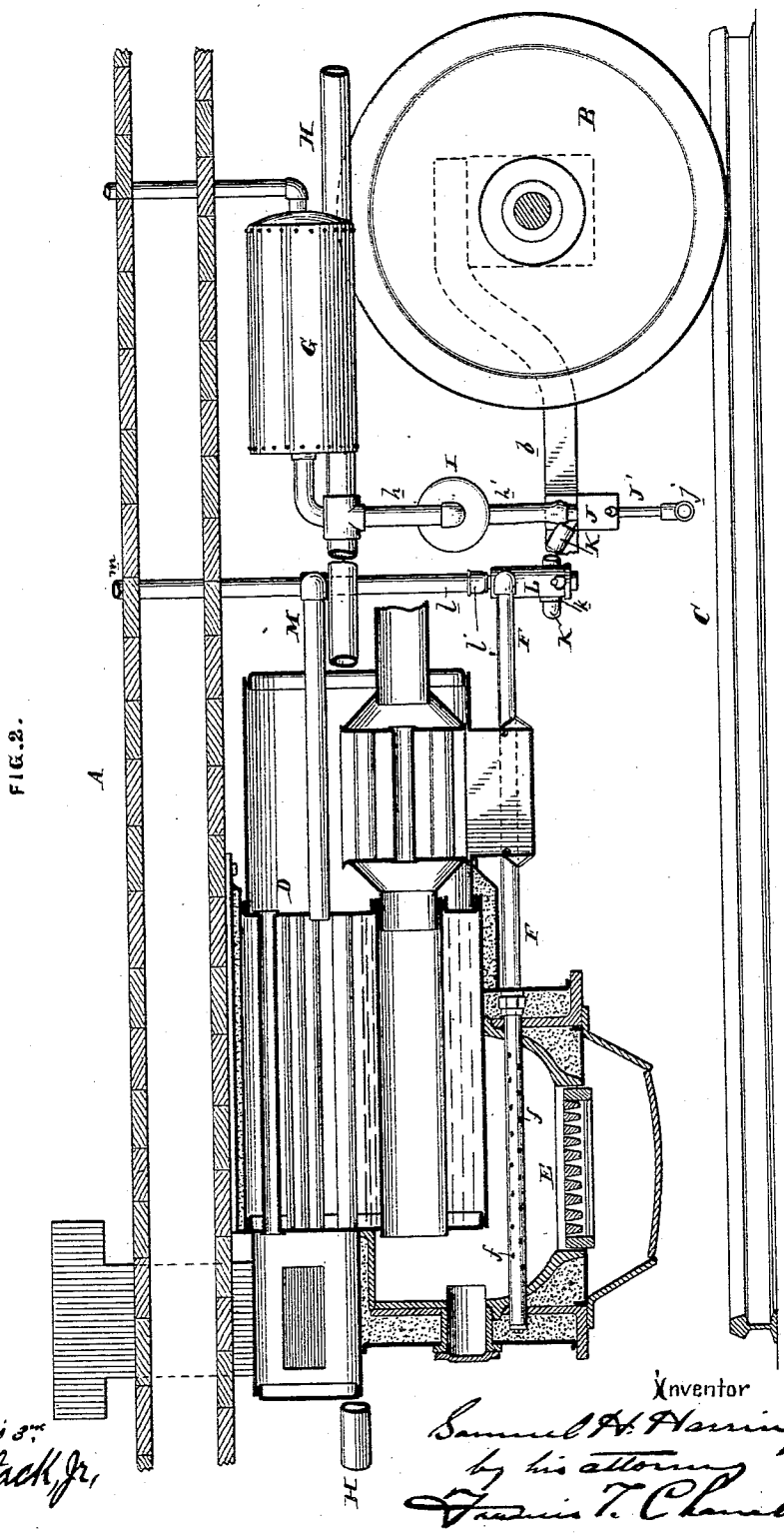

FIG. 2.

Attest
Isaac Norris 3rd
Joshua Mattack, Jr.

Inventor
Samuel H. Harrington
by his attorney
Francis T. Chambers

THE NORRIS PETERS CO., PHOTO-LITHO., WASHINGTON, D. C.

(No Model.) 3 Sheets—Sheet 3.

S. H. HARRINGTON.

FIRE EXTINGUISHER FOR CAR HEATERS.

No. 456,289. Patented July 21, 1891.

FIG. 5.

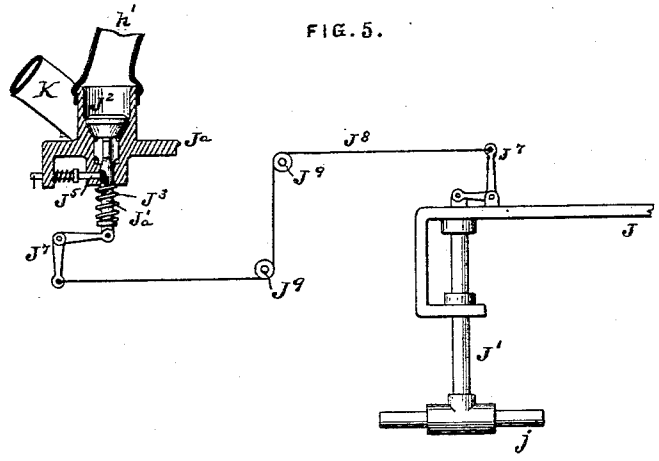

FIG. 6.

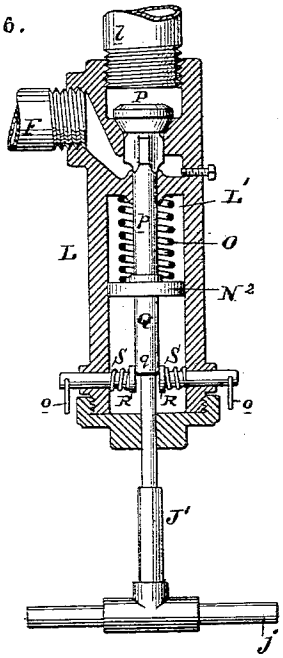

FIG. 7.

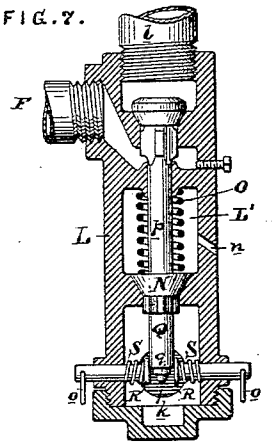

Witnesses:
Isaac Norris 2nd
Joshua Mattack Jr.

Inventor:
Samuel H. Harrington
by his attorney
Francis T. Chambers

THE NORRIS PETERS CO., PHOTO-LITHO., WASHINGTON, D. C.

UNITED STATES PATENT OFFICE.

SAMUEL H. HARRINGTON, OF COLUMBUS, OHIO.

FIRE-EXTINGUISHER FOR CAR-HEATERS.

SPECIFICATION forming part of Letters Patent No. 456,289, dated July 21, 1891.

Application filed November 25, 1887. Serial No. 256,064. (No model.)

To all whom it may concern:

Be it known that I, SAMUEL H. HARRINGTON, of Columbus, county of Franklin, State of Ohio, have invented a new and useful Improvement in Devices for Extinguishing Fires in Railway-Cars, of which the following is a true and exact description, reference being had to the accompanying drawings, which form a part of this specification.

My invention relates to that class of fire-extinguishing devices which are actuated by a derailment-trip, and is especially designed for use with cars heated by steam or hot water.

My object is, in the first place, to utilize the steam or water in the heating-boiler of the steam or hot-water conduit system to extinguish the fire in the furnace or fire-box, and I also aim to improve the character of the valves and other mechanism by which the derailment of the train is made to open a conduit leading from the boiler.

My invention consists, first, in combining with the boiler and fire-box a conduit leading from the boiler to the inside of the fire-box, closing this conduit by a valve, and connecting this valve with a derailment-trip in such a way that the trip will open the valve and allow the water or steam to flood the fire-box in case of accident; second, in combining with the elements above mentioned a conduit leading from the air-brake system to the valve in the water-conduit, which valve is arranged to open when exposed to the air-pressure, and in making the derailment-trip open this air-passage in case of accident; third, I have devised an improved valve for use in closing the water-conduit, which is especially well fitted for use where compressed air is used to actuate it; and, finally, I have designed a general combination of devices, as hereinafter fully described, and shown in the drawings, which are, I believe, adapted to make a very perfect and complete extinguishing system, and are peculiarly well fitted for use with a suspended heater, such as is shown in the drawings, in which Figures 1 to 4 illustrate my preferred system and most approved devices, while the remaining figures are intended to illustrate modifications of my invention.

In the drawings, in which similar letters designate similar parts, Fig. 1 is an end view of a car having a suspended heater with boiler and hot-water pipes running into the car, showing also my improvement and its connection with the air-brake system and derailment-trip. Fig. 2 is a side view of the same devices, showing the suspended heater and its boiler in section. Fig. 3 is a view, partly in section, of a derailment-trip which is well adapted for use with my device. Fig. 4 is a sectional view of the valve which I prefer to use in connection with the conduit leading from the boiler to the fire-box. Fig. 5 illustrates a derailment-trip and a valve in the air-conduit united in a different way from that shown in Fig. 3. Fig. 6 shows the derailment-trip arranged to act directly on the valve in the water-conduit, and Fig. 7 shows a modified construction of the valve shown in Fig. 4.

A is the car-flooring; B, one of the car-wheels; *b*, a section of one of the equalizing-bars.

C is a rail under wheel B.

D is the boiler, and E the fire-box or furnace, of a car-heater. The construction of these heaters, as shown in the drawings, is that of the "Westinghouse heater," and forms no part of my invention, save in combination with the devices hereinafter described. I will note, however, that the great advantage of the kind of heater shown lies in its being situated outside of and under the car.

The reservoir G and steam-pipes *m* are, as shown, parts of the heating system and need not be further described, as they have no active connection with my present invention.

H is the main supply-pipe of the air-brake system; *h*, a conduit leading from the pipe H to a reservoir-tank I, which has a valve *i*, which prevents the air in the reservoir from escaping back into pipe H when the pressure in that pipe is diminished—as, for instance, when the brakes are applied.

h' is a pipe leading from the reservoir I to a valve J^2, (see Figs. 3 and 5,) which closes it.

K is a pipe connecting with pipe *h'* and leading to a valve L.

J' is a derailment-trip, which I prefer to secure on a bracket J, secured in turn to the equalizing-bar *b* of the truck, and I prefer,

also, to place the valve J^2 on this same bracket and connect it directly with the trip J', as shown in Figs. 1, 2, and 3, though the valve may be placed at any distance from the trip and some convenient connection made—as, for instance, like that shown in Fig. 5—whereby the motion of the trip will open the valve.

The parts shown in Fig. 3 are the spring J^3, which tends to keep valve J^2 seated, and collar J^4, against which spring J^3 rests and which rests in turn on the spring-detent J^5, the spring J^6 of which forces it under collar J^4 and holds valve J^2 open when the rod J' is raised by its cross-bar j' coming in contact with rail C. This derailment-trip is fully described in my patent, No. 341,573, issued May 11, 1886, for a derailment-brake, and the use of it or other forms of derailment-brakes to open a passage between the air-brake system and a piston or valve which is actuated by the air and in turn opens other valves or otherwise releases or forces water into car-furnaces is fully described in the pending applications filed by myself on February 19 and March 17, 1887, serially numbered, respectively, 228,274 and 231,249, and by myself and Edward Graftstrom March 12, 1887, serially numbered 230,587.

The arrangement of the trip and valve J^2 shown in Fig. 5 is merely given as illustrating a modification of the arrangement shown in Fig. 3. Here the trip J' acts directly on one arm of a bell-crank lever J^7, the motion of which is by a cord J^8, running over pulleys J^9, transmitted to another bell-crank lever J^7, which acts in turn on the stem $J'\,a$ of valve J^2, which is supported on any convenient bracket $J\,a$.

Referring now to the valve-casing L, into which pipe K leads through an opening k at its base, (see Fig. 4,) l is a pipe leading into casing L from the steam-pipe M, which in turn connects directly with boiler D. As shown, I have connected pipe l with the ordinary steam-pipe of the heater; but it may lead direct to the boiler and enter it either below or above the water-line. I have at l' indicated a pressure-regulator in the pipe l. The use of this device is of course to prevent the steam from issuing from pipe l under an inconvenient pressure.

F is a pipe leading from the valve-casing L to the fire-box E, into which it passes and terminates in a perforated ring or branch f. The passage in casing L between pipes l and F is normally closed by a valve P, the stem p of which passes through a stuffing-box into a cylindrical chamber L' and is fitted with a piston N, adapted to fit and move in said cylinder.

O is a spring, which, as shown, acts to keep the valve P seated by pressing down on piston N.

n' is an escape-hole in the upper part of cylinder L, through which any air will escape when the piston moves upward.

n is also an air-escape hole, and is so situated as to be below the piston only after said piston has been raised as high as it is desirable it should go.

Q is a rod extending below the piston and having its bottom formed into ridges or steps q.

R R are spring-detents having springs S, which cause them to press against rod Q and to spring under the steps q as soon as the piston is raised. They thus hold the piston N at any height to which it may be raised, and through it of course the valve P is maintained at an elevation from its seat. Rings $o\ o$ or knobs similarly placed enable the detents R to be withdrawn at will, and the spring O then at once seats valve P.

In Fig. 7 I have shown the valve-casing L as having a valve N' instead of the piston N shown in my preferred construction, as illustrated in Fig. 4. This modified valve-casing, as illustrated in Fig. 7, is substantially identical with the valve-casing described, shown, and claimed in my former application filed March 17, 1887, Serial No. 231,249, and I make no claim for it here. It will be readily seen that the replacing of the valve N' by a piston N, as shown in Fig. 4, insures the opening of valve P to its fullest extent, as in the device having the piston the air acts with a constant pressure to raise the valve P to any desired height, regulated by the position of outlet n, (which, by the way, may be dispensed with entirely,) while in the case of a valve N' being used the air will begin to escape, and consequently to act with less force on said valve as soon as it leaves its seat.

Where, as in the case illustrated in Fig. 6, the derailment-trip is arranged to act by direct mechanical means to operate valve P, the cylinder L' need not be tight, and the device lettered N^2 is a mere guide to regulate the position of the valve-spindle p.

Referring now to the operation of my device in its preferred form, as shown in Figs. 1 to 4, it is of course obvious that the steam generated in boiler D and filling the heating-pipes m will tend to pass through the conduits l and F into the fire-box E, and that this is prevented only by the valve P, which closes the connection between said conduits. This valve P is held to its seat not only by the pressure of the spring O, but also by the pressure of the steam in conduit l. In the same way that valve P prevents the escape of steam into conduit F the valve J^2 prevents the escape of the compressed air in the air-brake system H or storage-tank I into conduit K, which, in connection with pipes h and h', forms a conduit leading from the brake system to the cylinder L' of valve-casing L. The valve J^2 being, as I have described, so connected with the derailment-trip as to be raised from its seat by the motion of said trip, it will be evident that the derailment of the train will, by moving the trip, open valve J^2,

and that in consequence of this the compressed air from the brake system will at once rush from conduit h' through conduit K into cylinder L' through the opening k, coming then in contact with piston N, which should be so proportioned with respect to the valve P and known force of spring O as to insure its being able to raise the valve against the steam and spring pressure. The air will force the piston upward in cylinder L', and by means of the rod p force the valve P up from its seat, thus opening the connection between conduits l and F. The air-hole n' permits the air to escape before the moving piston N and prevents its compression from being added to the work of said piston. As the piston moves up, the spring-detents R are forced by the springs S to engage with each of the steps q, and thus prevent the valve P from falling back to its seat. The motion of piston N and its connected valve P will continue until the piston passes above opening n', when the air can escape freely, and the pressure in the conduit H being thus released the brakes will be set by the well-known Westinghouse system. As soon as the valve P leaves its seat the steam in conduit l will flow out into conduit F and through the perforated ring f to the fire-box E, where it will quickly smother the fire. To prevent the steam from rushing with too great violence into the fire-box, it is advisable to use a pressure-regulator in the conduits l or F and preferably in the conduit l, as in this position it also serves to prevent the steam moving with too great momentum against the valve P, and thus makes the elevation of this valve easier than it would otherwise be. Any well-known pressure-regulator can of course be used in connection with the devices described.

When it is desired to reset the apparatus after it has been operated, it can be easily done. The withdrawal of detent J^5 enables spring J^3 to force the trip J' back to its normal position and reseats the valve J^2, thus closing the passage from the air-brake system to the cylinder L', and in the same way the withdrawal of detents R R enables spring O to force the piston N down and reseats the valve P, thus cutting off the connection between the steam-boiler and the fire-box, and the apparatus is then ready for use again.

Where the valve-casing L, instead of having a piston N, as shown in Fig. 4, has a valve N', the general mode of operation is the same as already described. This device, however, besides being inferior to the one where the piston is used, for reasons already noticed, requires more careful adjustment, as the valves P and N', being situated on the same rigid spindle, will require very nice work to insure their both being firmly seated at the same time.

Where it is not desired to use the compressed air of the brake system to operate the valve P, the trip J' can be made to act directly upon the valve-spindle p, as shown in Fig. 6, and of course the motion of the trip may be communicated to the valve-rod by any device for transmitting motion—such, for instance, as is illustrated in Fig. 5.

The derailment-trip shown in my drawings is, I believe, the best, or one of the best, for use with my device; but any form of trip may be used, my invention having no special reference to the character and construction of the derailment-trip.

It will be obvious that by connecting the pipe l with the boiler above the water-line the heating-pipes m will be sooner emptied than where the said pipe leads from the bottom of the boiler. This latter plan will perhaps extinguish the fire more rapidly by throwing liquid water upon it; but the plan shown diminishes the danger of steam escaping in the car and avoids the rush of steam in the fire-box which would ensue from emptying the highly-heated water into it.

It will of course be obvious that the improved valve-casing and its appliances, as shown in Fig. 4, can be advantageously used where the steam from the heating-pipes is allowed to escape freely instead of being led to the fire-box.

Having now described my invention, what I claim as new, and desire to secure by Letters Patent, is—

1. In combination with the boiler and fire-box of a steam car-heater, a conduit leading from the boiler to the fire-box, a valve-casing situated in and forming part of said conduit, a valve situated in said casing and arranged to close said conduit, a derailment-trip, a device for conveying motion by which the movement of the trip is made to open the said valve, and a spring-detent arranged to engage the valve-stem and keep the valve open.

2. In combination with the boiler and fire-box of a steam car-heater and the air-brake system of the car, a conduit leading from the boiler to the fire-box, a valve-casing situated in and forming part of said conduit, having a valve-seat in the course of the conduit and a cylinder L' situated outside of said conduit, a valve arranged to close the conduit in normal position and having a valve-rod passing into said cylindrical portion of the casing, a device secured to said valve-stem, seated in and closing the lower portion of the cylinder, a conduit leading from the air-brake system to the cylindrical portion of the casing below the seat of the device attached to the valve-stem, a valve situated in and normally closing the said air-conduit, a derailment-trip, and a device for conveying motion, whereby the motion of the trip is made to act upon and open said valve, all substantially as and for the purpose specified.

3. In combination with the boiler and fire-box of a steam car-heater and the air-brake system of the car, a conduit leading from the boiler to the fire-box, a valve-casing situated in and forming part of said conduit, having a

valve-seat in the course of the conduit and a cylinder L′ situated outside of said conduit, a valve arranged to close the conduit in normal position and having a valve-rod passing into said cylindrical portion of the casing, a device secured to said valve-stem, seated in and closing the lower portion of the cylinder, an air-escape in the upper part of the cylinder, a conduit leading from the air-brake system to the cylindrical portion of the casing below the seat of the device attached to the valve-stem, a valve situated in and normally closing the said air-conduit, a derailment-trip, and a device for conveying motion, whereby the motion of the trip is made to act upon and open said valve, all substantially as and for the purpose specified.

4. In combination with the boiler and fire-box of a steam car-heater and the air-brake system of the car, a conduit leading from the boiler to the fire-box, a pressure-regulator situated in said conduit, a valve-casing situated in and forming part of said conduit, having a valve-seat in the course of the conduit and a cylinder L′ situated outside of said conduit, a valve arranged to close the conduit in normal position and having a valve-rod passing into said cylindrical portion of the casing, a device secured to said valve-stem, seated in and closing the lower portion of the cylinder, a conduit leading from the air-brake system to the cylindrical portion of the casing below the seat of the device attached to the valve-stem, a valve situated in and normally closing the said air-conduit, a derailment-trip, and a device for conveying motion, whereby the motion of the trip is made to act upon and open said valve, all substantially as and for the purpose specified.

5. In combination with the boiler and fire-box of a steam car-heater and the air-brake system of the car, a conduit leading from the boiler to the fire-box, a valve-casing situated in and forming part of said conduit, having a valve-seat in the course of the conduit and a cylinder L′ situated outside of said conduit, a valve arranged to close the conduit in normal position and having a valve-rod passing into said cylindrical portion of the casing, a device secured to said valve-stem, seated in and closing the lower portion of the cylinder, a pressure-regulator situated in the steam-conduit in advance of the valve-casing, a conduit leading from the air-brake system to the cylindrical portion of the casing below the seat of the device attached to the valve-stem, a valve situated in and normally closing the said air-conduit, a derailment-trip, and a device for conveying motion, whereby the motion of the trip is made to act upon and open said valve, all substantially as and for the purpose specified.

6. In combination with the boiler and fire-box of a steam car-heater and the air-brake system of the car, a conduit leading from the boiler to the fire-box, a valve-casing situated in and forming part of said conduit, having a valve-seat in the course of the conduit and a cylinder L′ situated outside of said conduit, a valve arranged to close the conduit in normal position and having a valve-rod passing into said cylindrical portion of the casing, a piston secured to the valve-rod fitting in and closing the cylinder, a conduit leading from the air-brake system to the cylinder below the piston, a valve situated in and normally closing the said air-conduit, a derailment-trip, and a device for conveying motion, whereby the motion of the trip is made to act upon and open said valve, all substantially as and for the purpose specified.

7. In combination with the boiler and fire-box of a steam car-heater and the air-brake system of the car, a conduit leading from the boiler to the fire-box, a valve-casing situated in and forming part of said conduit, having a valve-seat in the course of the conduit and a cylinder L′ situated outside of said conduit, a valve arranged to close the conduit in normal position and having a valve-rod passing into said cylindrical portion of the casing, a piston secured to the valve-rod fitting in and closing the cylinder, an air-escape orifice situated in the upper part of the cylinder, a conduit leading from the air-brake system to the cylinder below the piston, a valve situated in and normally closing the said air-conduit, a derailment-trip, and a device for conveying motion, whereby the motion of the trip is made to act upon and open said valve, all substantially as and for the purpose specified.

8. In combination with the boiler and fire-box of a steam car-heater and the air-brake system of the car, a conduit leading from the boiler to the fire-box, a valve-casing situated in and forming part of said conduit, having a valve-seat in the course of the conduit and a cylinder L′ situated outside of said conduit, a valve arranged to close the conduit in normal position and having a valve-rod passing into said cylindrical portion of the casing, a piston secured to the valve-rod fitting in and closing the cylinder, an air-escape orifice situated in the upper part of the cylinder, an air-escape orifice in the cylinder placed to come below the piston only when it has raised the valve in the steam-conduit to the proper height, a conduit leading from the air-brake system to the cylinder below the piston, a valve situated in and normally closing the said air-conduit, a derailment-trip, and a device for conveying motion, whereby the motion of the trip is made to act upon and open said valve, all substantially as and for the purpose specified.

9. In combination with the steam-heating pipes of a car-heater and the air-brake system of the car, a conduit leading from the steam-pipes to a point of escape, a valve-casing L, situated in and forming part of the conduit, having a valve-seat in said conduit and a cylindrical extension outside of the same, a valve normally closing the steam-conduit and having a valve-stem extending

into the cylindrical portion of the casing, a piston secured to said valve-rod and fitting in said cylinder, a conduit leading from the air-brake system to a point in said cylinder below the piston, a valve situated in said air-conduit and normally closing it, a derailment-trip, and a device for transmitting motion, whereby the motion of the trip is made to move the valve closing the air-conduit, all substantially as and for the purpose specified.

SAMUEL H. HARRINGTON.

Witnesses:
LISLE STOKES,
JOSHUA MATLACK, Jr.