Oct. 13, 1931. W. KUEHNER 1,827,243

STRAP TIGHTENER

Filed Sept. 2, 1930

Fig. 1.

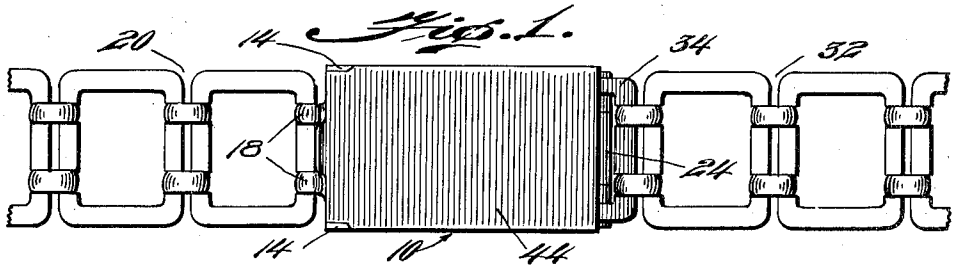

Fig. 2.

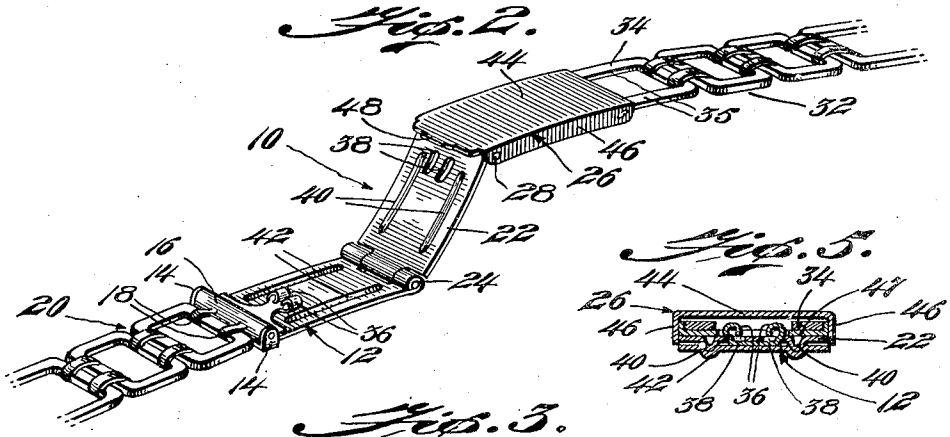

Fig. 5.

Fig. 3.

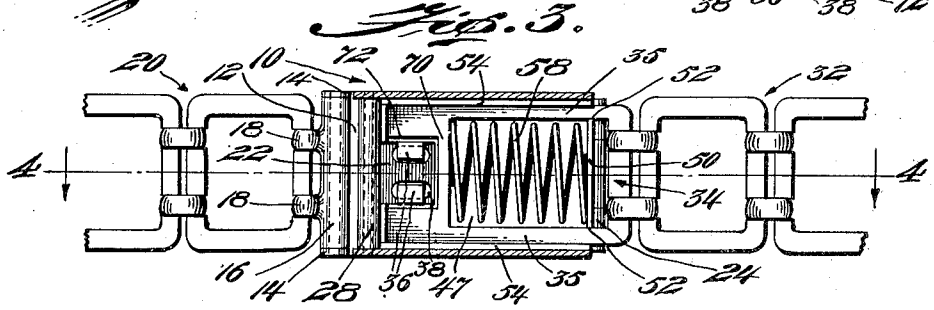

Fig. 4.

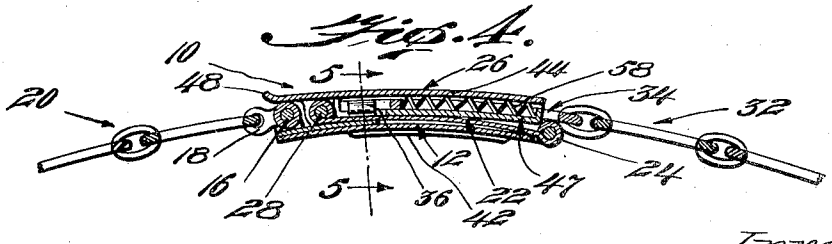

Inventor
William Kuehner
By Thomas A. Jenckes Jr.
Attorney

Patented Oct. 13, 1931 1,827,243

UNITED STATES PATENT OFFICE

WILHELM KUEHNER, OF PROVIDENCE, RHODE ISLAND

STRAP TIGHTENER

Application filed September 2, 1930. Serial No. 479,286.

My invention relates to strap tighteners of a type adapted to be inserted in a strap for expanding or contracting the length of the strap and of a type having a member resiliently slidable relative to the rest of the strap tightener.

My invention is particularly adapted for use with wrist watch bracelet straps although it is obvious that if desired it may be used for other purposes. It is commonly used in what is known in the trade as a centerfold, namely at a point in the bracelet opposite the wrist watch, but it is obvious that it may be used on other points of the bracelet, namely adjacent the wrist watch if desired.

My invention is particularly adapted to form a flexible strap tightener so that where employed in a wrist watch bracelet the length of the strap will automatically conform to the strains on and the configuration of the wrist or other limb or member on which it may be employed. Employing an expansible strap tightener of this description it is obvious that it will not be necessary to take out chain links where a chain is employed or shorten the end of the strap to fit different sized wrists or other members.

A further object of the strap tightener of the type shown herein is that it automatically tends to hold the watch in the desired position on top of the middle of the wrist. It is apparent from an inspection of my device that the strap tightener is of the type capable of opening up to permit removal of the strap from the wrist and adapted when in closed position to flexibly and firmly clasp the strap to the wrist so that the strap will be bound to the wrist without inconvenience during all movements of the arm and wrist.

A further feature of my invention relates in the specific means I employ to connect the connector sections together. I provide preferably a separate tubular extension projecting from one connector section which is resilient and which is adapted to resiliently fit into a cooperating slot in a superimposed connector section. While I preferably form my device of three connector sections to give the desired length to open up the strap tightener sufficiently to remove the strap from the wrist, I preferably construct the other connector section not having the projection adapted to fit in the slot in the third connector section with a thumb piece or opening extension of such a length as to make it impossible to clamp the other two connector sections together unless the connector section having the opening extension is brought substantially adjacent thereto.

A further feature of my invention is to provide a slidable member or connector section of this description, particularly adapted for use with open links which are now coming into vogue, which links are preferably square or rectangular and to this end I preferably shape the slidable member of open square or rectangular shape so that when said slidable member is in extended position it will simulate and look like an adjacent connected link.

A further feature of my invention relates to the provision of a strap tightener of this description made of a minimum number of working parts which is strong, compact, neat in appearance and which may be readily put together.

These and such other objects of my invention as may hereinafter appear will be best understood from a description of the accompanying drawings which illustrate an embodiment thereof attached to an open square link chain.

In the drawings, Fig. 1 is a plan view of my improved strap tightener with the adjacent ends of such a chain attached thereto in closed position.

Fig. 2 is a perspective view of the strap tightener and adjacent chain end shown in Fig. 1 with the strap tightener in open position.

Fig. 3 is a plan view generally similar to Fig. 1 with the top plate of the top connector section removed to show the construction of the interior of the top connector section and the means for clamping the intermediate and back connector sections together.

Fig. 4 is a longitudinal sectional view taken along the line 4—4 of Fig. 3.

Fig. 5 is a transverse sectional view taken along the line 5—5 of Fig. 4.

In the drawings, wherein like characters

of reference indicate like parts throughout, 10 generally indicates a strap tightener constructed in accordance with the principles of my invention shown employed as a centerfold of a wrist watch bracelet strap.

In the description and claims, except as otherwise stated, I employ the words "inner" and "outer" in reference to the end of the back connector section having the strap end hinged thereto when said members are in open positions. Said strap tightener comprises a back connector section 12 having means such as the struck up lugs 14 at the inner end thereof adapted to receive a pivot bar 16 having suitable means projecting therefrom such as the links 18 to attach the adjacent end of an open square or rectangular block link chain fabric 20 thereto. Although I have shown my invention attached to a block link chain fabric, it is obvious that any suitable type of strap may be employed and any suitable means to attach a strap end to the inner end of the back connector section may be employed. The intermediate connector section 22 has its inner end hinged to the outer end of the back connector section 12 by any suitable means such as the hinge 24. The front connector section 26 is hinged to the outer end of the intermediate connector section 22 by means of the hinge 28 and is provided with suitable means later to be described in detail to resiliently attach an opposite strap end 32 thereto, preferably to the slidable member 34 thereof. It is obvious that when in closed position said intermediate connector section 22 and front connector section 26 are adapted to overlie respectively said back and intermediate connector sections.

I provide means to detachably secure said intermediate connector section 22 to said back connector section 12 to secure all three connector sections together in closed position. For this purpose, I preferably provide the upper surface of the back connector section 12 with two resilient projections 36 extending upwards therefrom and the intermediate connector section 22 with two cooperating slots 38 therein adapted to receive said projections 36 to resiliently retain said connector sections in closed position, in the embodiment shown said slots 38 and projections 36 being relatively near the inner end of said section when they are in closed position. The back connector section 12 preferably comprises a plate preferably stamped or otherwise fabricated of flat stock and the two substantially tubular resilient rolled over projections 36 preferably consisting of separate members struck up through the plate and the intermediate connector section 22 also preferably comprises a plate. For the purposes of adding strength to the intermediate connector section 22 and back connector section 12, and to keep them in alignment, I preferably provide two ribs 40 depending from the lower surface of the intermediate connector section 22 when in closed position adapted to fit in cooperating grooves 42 sunk in the upper surface of the back connector section 12.

In my preferred embodiment, the front connector section 26 is preferably constructed as follows: I provide the top plate 44 having the downwardly projecting side walls 46. I preferably extend the inner end of the top wall as at 48 to provide an opening extension for the strap tightener and also to prevent superimposing of the intermediate connector section 22 on the back connector section 12 to permit the projections 36 from the back connector section 12 from fitting into the slots 38 in the intermediate connector section until the front connector section 26 is superimposed on the intermediate connector section 22. To provide an expansible top connector section, I provide a slidable member 34 adapted to slide underneath said top plate 44 having suitable means at the outer end thereof for hingedly securing a chain or strap end 32 thereto. As stated, in my preferred embodiment, said slidable member is preferably an open rectangular member so that when in extended position it may simulate one of the links of the open block chain. To secure said slidable member 34 underneath said top plate, I provide the back plate 47 having an upstanding outer wall 50 preferably open as at 52 near each end thereof for passage of the sides 35 of the rectangular slidable member therethrough and I provide means to secure said back plate 47 within said top plate 44. Any means may be provided for this purpose and in the preferred embodiment I provide the back plate with the upstanding side walls 54 adapted to be frictionally retained within the side walls 46 of the top plate 44. To normally urge the rectangular slidable member 34 inwards I provide spring means such as the flat spring 58 shown, having the outer end thereof adapted to abut the inner surface of the upstanding outer wall 50 of the back plate 48 and the inner end thereof adapted to abut the outer surface of the inner wall 70 of the slidable member 34. The inner end 70 of the slidable member may be extended if desired a substantial distance beyond the spring and may have its center portion cut away as at 72 in order to provide space for the upstanding resilient projections 36 after they have passed through the slots 38 to compactly lie within.

It is obvious that in practice the spring 58 will normally urge the rectangular member inwards within the top connector section 26, but will freely contract to permit the desired expansion of the chain or strap on outward movement of said slidable member.

The operation of my invention is obvious from the above description. It is merely

necessary to open up the connector sections to the open position shown in Fig. 2 to insert the wrist through the expanded chain or strap and when the strap has been placed in the desired position on the wrist the three connector sections are superimposed respectively one on top of the other the opening extension 48 preventing the back and intermediate connector sections from locking together until the top connector section 26 is superimposed thereon. As the sections are brought into superimposed relationship it is obvious that the resilient tubular projections 36 will slide through the slots 38 to compactly secure all three sections together. It is obvious that as the wrist or limb expands or moves in use the strap end 32 and connected slidable member 34 will loosely slide within the top connector 26 to permit this freedom of movement. To detach from the wrist it is merely necessary to insert a thumb nail or other sharp instrument under the opening extension 48 when the resiliently tubular projections 36 will snap out of the slots 38 to permit the strap tightener to expand to the position shown in Fig. 2.

In order that the entire strap tightener may be compact, the back connector section 12 is made slightly longer than the others and the various connector sections are made of such a length that when in closed position the hinge means 24 for joining the back and intermediate connector sections together will extend beyond the outer wall 50 of the back plate of the front connector section and lie underneath the slidable rectangular member 34 thereof, the hinge means 16 for joining the inner end of the back connector section and chain end 20 and the hinge means 28 for joining the inner end of the front connector section and the outer end of the intermediate connector section will lie intermediate said top and bottom connector sections and the opening extension 48 of the front connector section top plate will project inwardly of said hinge means and back connector section to permit the ready operation thereof.

It is thus obvious that I have provided a strap tightener of a compact and neat form of a minimum number of working parts. As also stated while my invention is particularly adapted for use with open link chains and the slidable member 34 is made to simulate one of these chains in use it is obvious that for certain features of my invention any type of strap ends may be attached thereto.

As shown the connector sections may be made of arcuate form to more compactly conform to the shape of the wrist or limb.

It is understood that my invention is not limited to the specific embodiment shown and that various deviations may be made therefrom without departing from the spirit and scope of the appended claims.

What I claim is:—

1. A tightener adapted to be inserted in a chain consisting of substantially square or rectangular open links for expanding or contracting the length of the chain, consisting of a back connector section comprising a plate having two resilient rolled over substantially tubular projections projecting therefrom near the inner end thereof and hinge means at the inner end thereof for securing a chain end thereto, an intermediate connector section comprising a plate having two cooperating slots therein near the outer end thereof adapted to receive said tubular projections to secure said connector sections together when said intermediate connector section is brought into closed position overlying said back connector section, a front connector section comprising a top plate having downwardly projecting sides and an opening extension at the inner end thereof, an open rectangular member slidable within said top plate having means at the outer end thereof for hingedly securing a chain end thereto whereby when in extended position said rectangular member may simulate a chain link, a back plate having an upstanding outer wall open at each side thereof for passage of the sides of the rectangular member therethrough, means abutting the outer wall of the back plate and the outer edge of the inner wall of the rectangular member to normally urge said member inwardly and means to secure said back plate within said top plate, hinge means to secure the outer end of the back connector section to the inner end of the intermediate connector section, and means to secure the outer end of said intermediate connector section to the inner end of said front connector section top plate, the sections being of such lengths that when in closed position the hinge means for joining the back and intermediate connector sections will extend beyond the outer wall of the back plate of the top connector section and lie underneath the slidable rectangular member thereof, the hinge means for joining the inner end of the back connector section and chain end and the hinge means for joining the top connector section and intermediate connector section will lie intermediate said top and bottom connector sections and the opening extension of the front connector section top plate will project inwardly of said hinge means and back connector section and prevent attachment of said back and intermediate connector sections until the top section also overlies them.

2. A tightener adapted to be inserted in a chain consisting of substantially square or rectangular open links for expanding or contracting the length of the chain, consisting of a back connector section having hinge means at the inner end thereof for securing a chain end thereto, an intermediate connector sec-

tion, means to secure said connector sections together when said intermediate connector section is brought in closed position overlying said back connector sections, a front connector section comprising a top plate having downwardly projecting sides and an opening extension at the inner end thereof, an open rectangular member slidable within said top plate having means at the outer end thereof for hingedly securing a chain end thereto whereby when in extended position said rectangular member may simulate a chain link, a back plate having an upstanding outer wall open at each side thereof for passage of the sides of the rectangular member therethrough, means abutting the outer wall of the back plate and the outer edge of the inner wall of the rectangular member to normally urge said member inwardly, and means to secure said back plate within said top plate, hinge means to secure the outer end of the back connector section to the inner end of the intermediate connector section, and hinge means to secure the outer end of said intermediate connector section to the inner end of said front connector section top plate, the sections being of such lengths that when in closed position the hinge means for joining the back and intermediate connector sections will extend beyond the outer wall of the back plate of the top connector section and lie underneath the slidable rectangular member thereof, the hinge means for joining the inner end of the back connector section and chain end and the hinge means for joining the top connector section and intermediate connector section will lie intermediate said top and bottom connector sections and the opening extension of the front connector section top plate will project inwardly of said hinge means and back connector section and prevent attachment of said back and intermediate connector sections until the top section also overlies them.

3. A tightener adapted to be inserted in a chain consisting of substantially square or rectangular open links for expanding or contracting the length of the chain, consisting of a back connector section having hinge means at the inner end thereof for securing a chain end thereto, an intermediate connector section, means to secure said connector sections together when said intermediate connector section is brought into closed position overlying said back connector section, a front connector section comprising a top plate having downwardly projecting sides and an opening extension at the inner end thereof, and open rectangular member slidable within said top plate having means at the outer end thereof for hingedly securing a chain end thereto whereby when in extended position said rectangular member may simulate a chain link, a back plate having an upstanding outer wall open at each side thereof for passage of the sides of the rectangular member therethrough, means abutting the outer wall of the back plate and the outer edge of the inner wall of the rectangular member to normally urge said member inwardly, and means to secure said back plate within said top plate, hinge means to secure the outer end of the back connector section to the inner end of the intermediate connector section, and hinge means to secure the outer end of said intermediate connector section to the inner end of said front connector section top plate.

4. A tightener adapted to be inserted in a strap for expanding or contracting the length of the strap, consisting of a back connector section comprising a plate having two resilient rolled over substantially tubular projections projecting therefrom near the inner end thereof and hinge means at the inner end thereof for securing a strap end thereto, an intermediate connector section comprising a plate having two cooperating slots therein near the outer end thereof adapted to receive said tubular projections to secure said connector sections together when said intermediate connector section is brought into closed position overlying said back connector section, a front connector section comprising a top plate having downwardly projecting sides and an opening extension at the inner end thereof, an open member slidable within said top plate having means at the outer end thereof for hingedly securing a strap end thereto, a back plate having an upstanding outer wall having an open portion for passage of the slidable member therethrough, means abutting the outer wall of the back plate and the outer edge of the inner wall of the open slidable member to normally urge said member inwardly, and means to secure said back plate within said top plate, hinge means to secure the outer end of the back connector section to the inner end of the intermediate connector section, and hinge means to secure the outer end of said intermediate connector section to the inner end of said front connector section top plate, the sections being of such lengths that when in closed position the hinge means for joining the back and intermediate connector sections will extend beyond the outer wall of the back plate of the top connector section and lie underneath the slidable member thereof, the hinge means for joining the inner end of the back connector section and strap end and the hinge means for joining the top connector section and intermediate connector section will lie intermediate said top and bottom connector sections and the opening extension of the front connector section top plate will project inwardly of said hinge means and back connector section and prevent attachment of said back and intermediate connector sections until the top section also overlies them.

5. A tightener adapted to be inserted in a

strap for expanding or contracting the length of the strap consisting of a back connector section having hinge means at the inner end thereof for securing a strap end thereto, an intermediate connector section, means to secure said connector sections together when said intermediate connector section is brought into closed position overlying said back connector section, a front connector comprising a top plate having downwardly projecting sides and an opening extension at the inner end thereof, an open member slidable within said top plate having means at the outer end thereof for hingedly securing a strap end thereto, a back plate having an upstanding outer wall having open portions for passage of the sides of the slidable member therethrough, means abutting the outer wall of the back plate and the outer edge of the inner wall of the slidable member to normally urge said member inwardly, and means to secure said back plate within said top plate, hinge means to secure the outer end of the back connector section to the inner end of the intermediate connector section, and hinge means to secure the outer end of said intermediate connector section to the inner end of said front connector section top plate, the sections being of such lengths that when in closed position the hinge means for joining the back and intermediate connector sections will extend beyond the outer wall of the back plate of the top connector section and lie underneath the slidable member thereof, the hinge means for joining the inner end of the back connector section and strap end and the hinge means for joining the top connector section and intermediate connector section will lie intermediate said top and bottom connector sections and the opening extension of the front connector section top plate will project inwardly of said hinge means and back connector section and prevent attachment of said back and intermediate connector sections until the top section also overlies them.

6. A tightener adapted to be inserted in a strap for expanding or contracting the length of the strap, consisting of a back connector section having hinge means at the inner end thereof for securing a strap end thereto, an intermediate connector section, means to secure said connector sections together when said intermediate connector section is brought into closed position overlying said back connector section, a front connector comprising a top plate having downwardly projecting sides and an opening extension at the inner end thereof, an open member adapted to slide within said top plate having means at the outer end thereof for securing a strap end thereto, a back plate having an upstanding outer wall having open portions for passage of the sides of the slidable member therethrough, means abutting the outer wall of the back plate and the outer edge of the inner wall of the slidable member to normally urge said member inwardly, and means to secure said back plate within said top plate, hinge means to secure the outer end of the back connector section to the inner end of the intermediate connector section, hinge means to secure the outer end of said intermediate connector section to the inner end of the front connector section.

In testimony whereof I affix my signature.

WILHELM KUEHNER.