O. C. NEWTON.

TRACK SANDING DEVICE.

APPLICATION FILED MAY 19, 1913.

1,068,602. Patented July 29, 1913.

Fig. 1

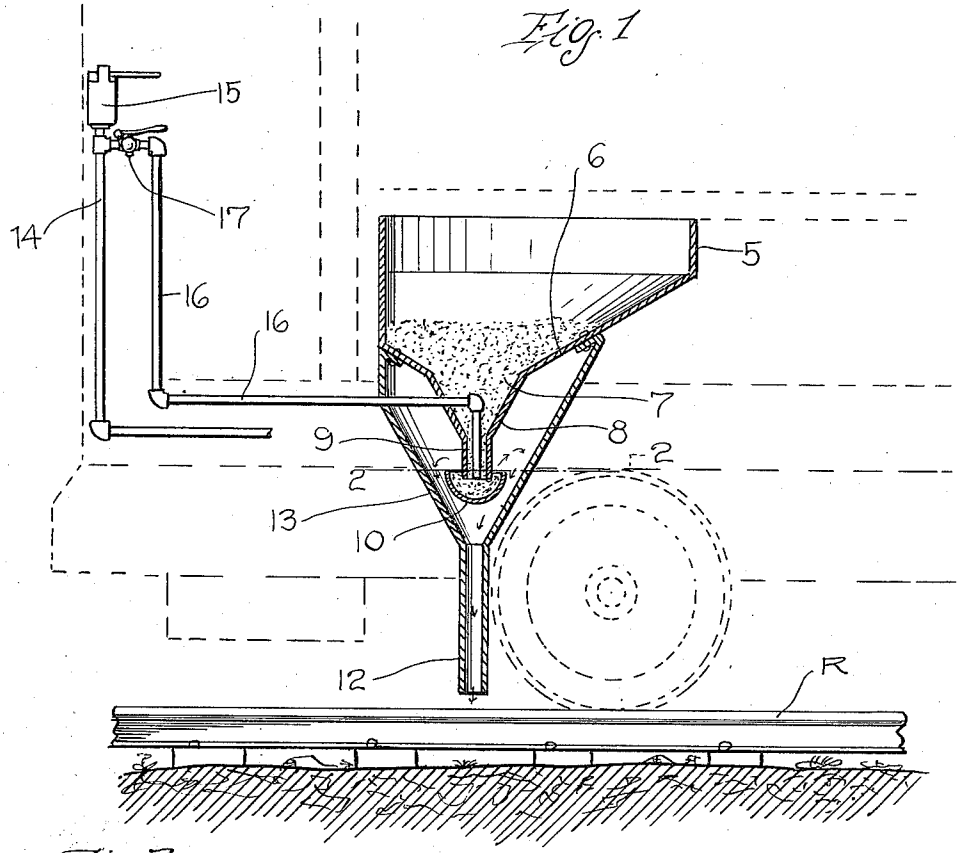

Fig. 2

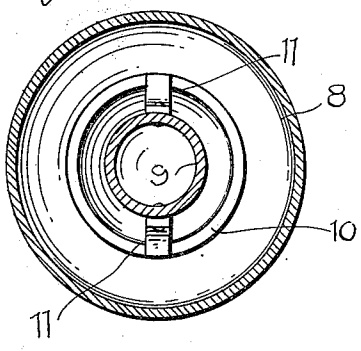

Fig. 3

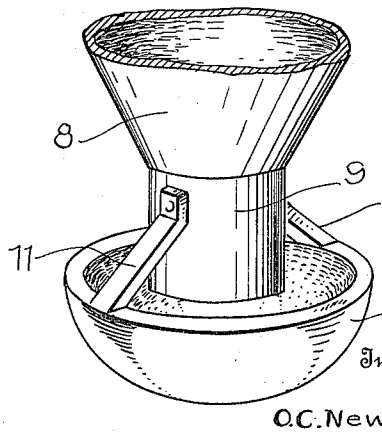

Witnesses
Robert M. Sutphen
A. L. Hind

Inventor
O.C. Newton

By Watson E. Coleman
Attorney

COLUMBIA PLANOGRAPH CO., WASHINGTON, D. C.

UNITED STATES PATENT OFFICE.

OTTIS C. NEWTON, OF HUNTINGTON, WEST VIRGINIA.

TRACK-SANDING DEVICE.

1,068,602. Specification of Letters Patent. Patented July 29, 1913.

Application filed May 19, 1913. Serial No. 768,564.

To all whom it may concern:

Be it known that I, OTTIS C. NEWTON, citizen of the United States, residing at Huntington, in the county of Cabell and State of West Virginia, have invented certain new and useful Improvements in Track-Sanding Devices, of which the following is a specification, reference being had to the accompanying drawings.

This invention relates to track sanding devices and has for its primary object the provision of improved means for feeding the sand from a box or receptacle to the hose or tube from which the same is discharged upon the track rails.

The invention has for another object the provision of a funnel depending from the box or receptacle, a cup or container fixed to the lower end of the funnel to receive the sand, and a pipe extending downwardly in the funnel and adapted to discharge an air blast in the cup and scatter the sand therefrom into a directing hose or tube.

The invention has for still another object the provision of a device for the above purpose which is simple and durable in its construction, highly efficient and reliable in operation and may be produced and installed at comparatively small cost.

With the above and other objects in view as will become apparent as the description proceeds, the invention consists in certain constructions, combinations and arrangements of the parts that I shall hereinafter fully describe and claim.

For a full understanding of the invention, reference is to be had to the following description and accompanying drawing, in which—

Figure 1 is a vertical section of a track sanding device embodying the present invention; Fig. 2 is a section taken on the line 2—2 of Fig. 1; Fig. 3 is a detail perspective view of the lower end portion of the funnel showing the sand receiving cup attached thereto.

Referring in detail to the drawings, 5 designates the sand box or receptacle having an inclined wall 6, by means of which the sand is fed through an opening 7 in the bottom of the receptacle into the depending funnel 8. At its lower end this funnel terminates in a longitudinally extending discharge tube or spout 9 and upon the same the cup 10 is secured by means of the diametrically opposed outwardly and downwardly inclined bars or arms 11 which are fixed at their upper ends to the spout 9 of the funnel. The spout 9 extends downwardly into the cup 10 below the plane of the upper edge of said cup which is disposed in spaced concentric relation to the spout.

12 designates a receiving and directing tube for the sand, the upper end of which is flared as indicated at 13 and securely attached to the under side of the sand box or receptacle 5. This directing tube may be constructed of canvas, rubber or any other desired material and has its lower open end disposed contiguous to the car wheels and immediately above the tread surface of the rail which is indicated at R.

From an air supply pipe 14 leading to the motorman's valve 15, a pipe 16 extends and is disposed within the funnel 8. This pipe is provided with a suitable cut off valve 17 whereby the supply of air thereto may be controlled. The end of this pipe extends downwardly within the funnel 8 and has its lower open end disposed in the discharge spout 9 of said funnel and below the upper edge of the sand receiving cup 10.

From the foregoing the construction and manner of operation of my invention will be fully and clearly understood. The sand is continuously fed from the box or receptacle 5 into the funnel 8 and collects in the receptacle 10 until the level of the sand in said receptacle is above the plane of the discharge spout 9 of the funnel. When it is desired to sand the track, the motorman opens the valve 17 admitting air to the pipe 16. This air is discharged in a strong blast into the sand which is contained in the cup 10 and by said air blast is forcibly discharged outwardly and upwardly over the edge of said receptacle and into the upper enlarged or flared portion of the discharge spout 12. It will thus be apparent that the sand is fed in a finely divided state by the tube or hose 12 upon the track rail R. Thus all liability of the car wheels slipping upon the rails is eliminated and danger of the car leaving the track rails is avoided. By utilizing an air blast to discharge the sand from the holding cup or vessel 10 into the hose or tube 12, the feed of the sand is absolutely assured and the same is fed uniformly to the track rail.

From the above it will be seen that I have provided a track sanding device which is exceedingly simple in construction, highly efficient and reliable in practical operation

and may be produced and installed upon street railway cars at very small cost.

It is to be understood that the invention is susceptible of considerable modification in the form, proportion and arrangement of the several parts within the scope of the appended claims, and I reserve the right to resort to all such legitimate changes as may be fairly embodied therein.

Having thus described the invention, what is claimed is:

1. In a track sanding device, the combination with a sand box or receptacle, having an opening in its bottom, of a funnel depending from said opening, a sand receiving cup mounted upon the lower end of said funnel and having its upper edge disposed in a plane above the discharge opening of the funnel, and a pipe extending from a source of compressed air downwardly through the funnel and having its discharge end disposed in the open end of the funnel and within said cup.

2. In a track sanding device, the combination with a sand box or receptacle having an opening in its bottom, of a funnel depending from the opening in the sand box having a longitudinally extending outlet spout at its lower end, a cup arranged beneath said outlet spout and having its upper edge disposed in spaced concentric relation thereto and above the outlet, supporting bars fixed to the outlet spout of the funnel and to said cup, a sand receiving tube fixed to the bottom of the receptacle and inclosing said funnel and cup, said tube having its discharge end disposed adjacent the tread surface of the rail, and a pipe extending from an air supply source and disposed downwardly in the funnel through the outlet thereof, the lower open end of said pipe discharging an air blast into the cup at the approximate center thereof.

In testimony whereof I hereunto affix my signature in the presence of two witnesses.

OTTIS C. NEWTON.

Witnesses:
JAS. FAGAN,
JAS. O. MARCUM.

Copies of this patent may be obtained for five cents each, by addressing the "Commissioner of Patents, Washington, D. C."