Oct. 28, 1952 L. L. SIMMONS 2,615,687

HEAT EXCHANGER

Filed Jan. 3, 1948 2 SHEETS—SHEET 1

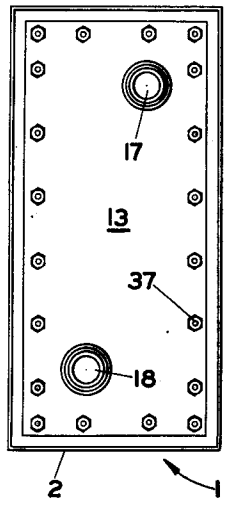

FIG. 3

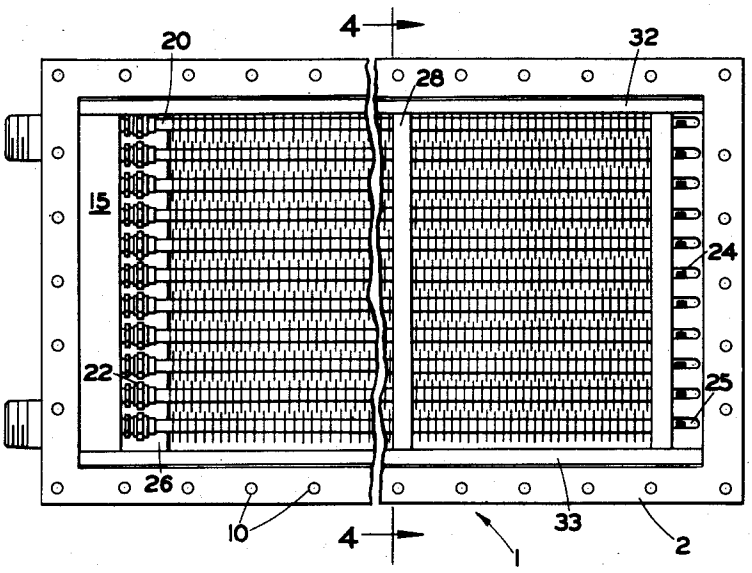

FIG. 2

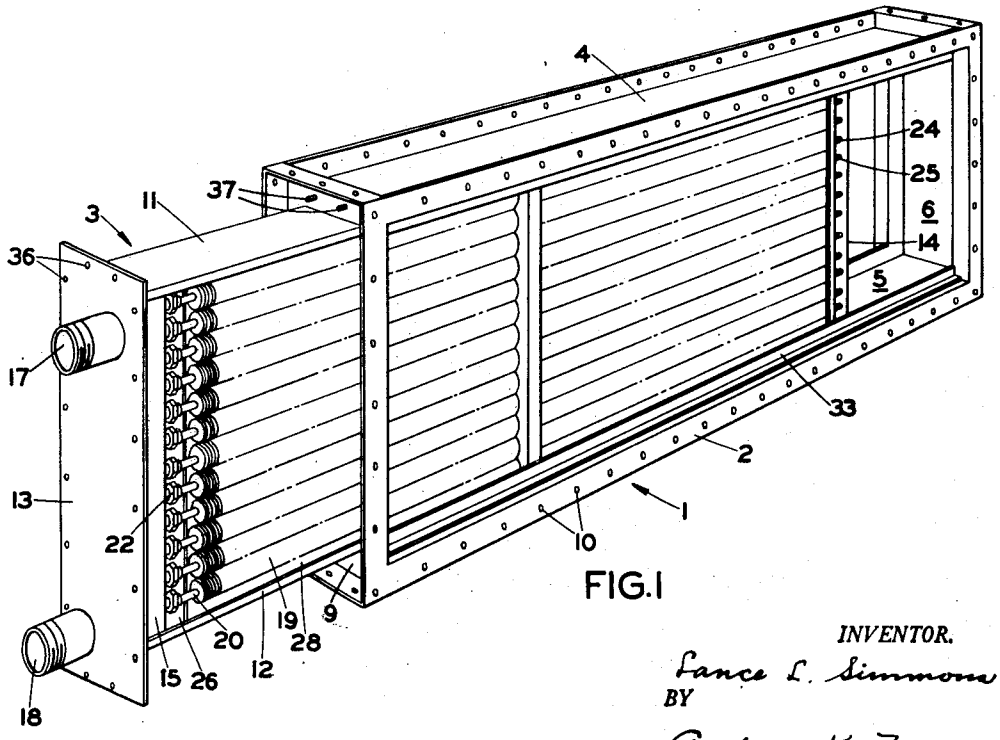

FIG. 1

INVENTOR.
Lance L. Simmons
BY
Andrew K. Faulds
his ATTORNEY

Oct. 28, 1952 L. L. SIMMONS 2,615,687

HEAT EXCHANGER

Filed Jan. 3, 1948 2 SHEETS—SHEET 2

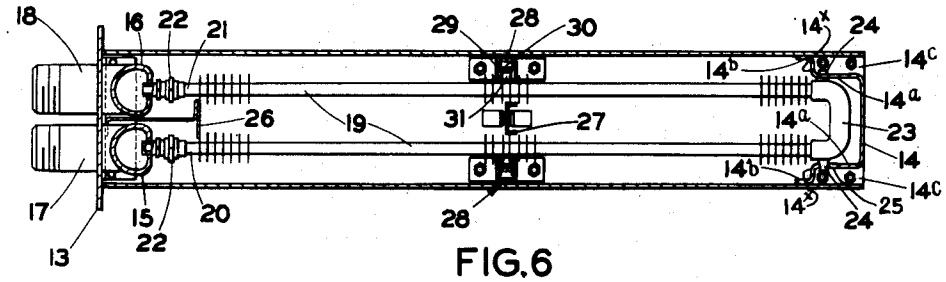

FIG.6

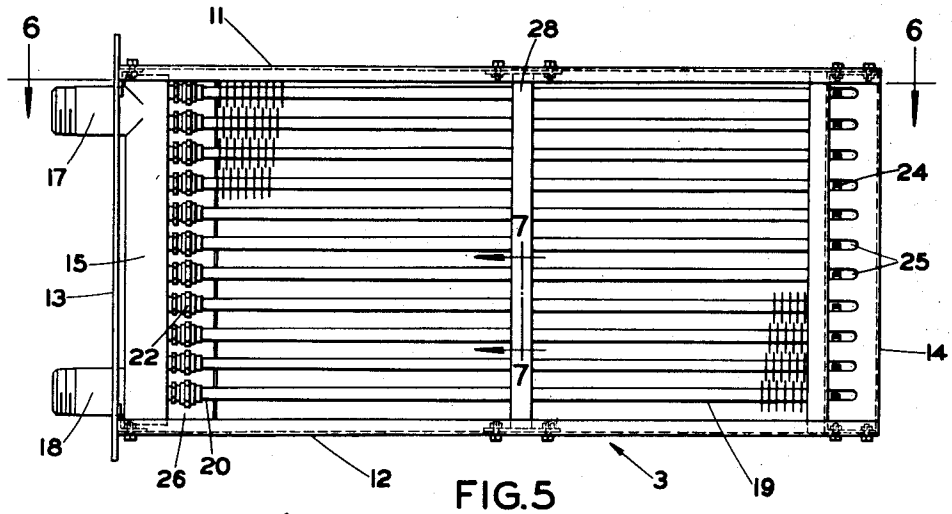

FIG.5

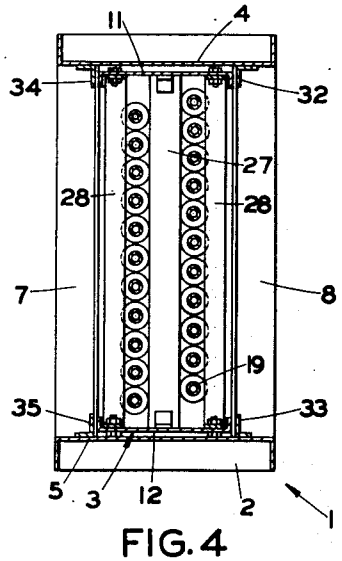

FIG.4

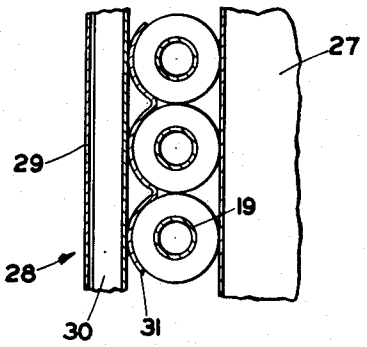

FIG.7

INVENTOR.

Lance L. Simmons

BY

Andrew K. Faulds

his ATTORNEY

Patented Oct. 28, 1952

2,615,687

UNITED STATES PATENT OFFICE

2,615,687

HEAT EXCHANGER

Lance L. Simmons, Detroit, Mich., assignor to American Blower Corporation, Dearborn, Mich., a corporation of Delaware

Application January 3, 1948, Serial No. 440

8 Claims. (Cl. 257—144)

1

This invention relates to new and useful improvements in heat exchangers.

One of the objects of this invention is to provide a heat exchanger assembly wherein there is a bank of heat exchange tubes which are assembled into a casing for unit installation.

Another object is to provide a heat exchanger assembly having a means to permit expansion and contraction of the tubes therein without distortion.

Another object is to provide a heat exchanger assembly wherein the tubes may be individually inserted and removed for ease of repair and maintenance.

Another object is to provide a heat exchanger assembly comprising a bank of tubes and having a means to prevent bypassing of the air stream around the edges or the ends of the tubes.

Another object is to provide a supporting structure for a heat exchange unit which closes off flow around the unit.

Another object is to provide a heat exchanger assembly having an outer supporting structure and an inner bank of heat exchange tubes, the inner bank of tubes being slidably insertable into and removable from the outer structure for ease of maintenance and repair without dismantling the outer structure.

Another object is to provide a new and improved heat exchanger assembly which may be simply and inexpensively manufactured and assembled for commercial installation and use.

Other objects will become apparent from time to time throughout the specification and claims as hereinafter related.

This invention consists of the new and improved construction and combination of parts, to be more fully described hereinafter and the novelty of which will be particularly pointed out and distinctly claimed.

In the accompanying drawings, to be taken as a part of this specification, there is clearly and fully illustrated one preferred embodiment of this invention, in which drawings:

Figure 1 is a view in perspective of this heat exchanger assembly shown partially installed in a supporting structure to illustrate more clearly the manner of installation,

Fig. 2 is a broken and shortened view in front elevation of this heat exchanger assembly completely assembled,

Fig. 3 is a view in left elevation of the assembly of Fig. 2,

Fig. 4 is a sectional view of the assembly taken on the line 4—4 of Fig. 2,

2

Fig. 5 is a view in front elevation of the sub-assembly of the inner casing and heating tubes which is shown partially installed in Fig. 1,

Fig. 6 is a top sectional view taken on the line 6—6 of Fig. 5 but showing the tube connections to the headers and one of the return bend guide slots in section, and

Fig. 7 is a detail sectional view of the heating tubes' support and taken on the section line 7—7 of Fig. 5.

Referring to the drawings by characters of reference, there is a heat exchanger assembly 1 comprising an outer casing or supporting structure 2 and a heat exchanger sub-assembly 3. The outer casing 2 is constructed of a welded structure of angle and channel members and is formed in a rectangular framework having closed top and bottom walls 4 and 5 and a closed end wall 6 formed by the base portion of said channel members. The casing 2 has two opposite open sides 7 and 8 and an open end 9 for insertion of the sub-assembly 3. The various angles and channels have a plurality of holes 10 through the sides thereof for receiving bolts or other securing means for mounting or securing the casing in position.

The heat exchanger sub-assembly 3 comprises a supporting structure formed of a pair of channel members 11 and 12 forming closed top and bottom walls and a pair of end wall members 13 and 14. Secured on the end wall 13 are a pair of headers 15 and 16 having inlet and outlet fittings 17 and 18 respectively extending through the wall 13. The header 15 functions as a fluid inlet receiver and the header 16 functions as a fluid outlet collector, the inlet 17 being positioned above the outlet 18. Extending longitudinally of the sub-assembly structure 3 are a plurality of finned heat exchange tubes 19 having their inlet ends or runs 20 connected to the header 15 and their outlet ends or runs 21 connected to the header 16 by compression fittings or unions 22. The tubes 19 are substantially U-shaped and are formed of straight sections of tubing joined together by reverse bend couplings 23 at the end 14 of the sub-assembly structure 3. The fins on the tubes 19 are preferably helical but are shown diagrammatically in the drawings for ease of illustration. The end wall 14 is substantially U-shaped or of channel form when taken in horizontal section. The side portions 14a of the end wall 14 cover the sides of the reverse bend couplings 23 and close the end of the sub-assembly structure 3. The side wall portions 14a are connected by out-turned flanges

14x to the offset portions 14b which are joined to the edge flanges of the top and bottom wall channel members 11 and 12 for rigidity of assembly. The end wall 14 has flanged portions 14c at top and bottom by which it is bolted or secured to the top and bottom wall members 11 and 12 to provide a rigid sub-assembly structure. The side wall portions 14a of the end wall 14 have a plurality of horizontal slots 25 therein which are open toward the finned portion of the tubes through the out-turned flanges 14x. The reverse bend couplings 23 each have a pair of projecting carrier members or ears 24 thereon which extend laterally outward from opposite sides of the reverse bend coupling 23 and which fit slidably into the slots 25 in the end wall 14. The end wall 14 and slots 25 function to support the tubes 19 at their reverse bend portions and to permit expansion and contraction of the tubes without distortion. The side portions of the end wall 14 also function to prevent air passing over the tubes 19 from bypassing around the reverse bend portions where there are no fins and heat transfer is poor. At the end wall 13 there is a T-shaped baffle member 26 which extends between the headers 15 and 16 and projects outward to and has its cross arm portion abutting the end of the finned portion of the tubes 19 adjacent their inlet and outlet ends. The baffle 26 functions to prevent air from bypassing around the header end portion of the tubes 19 where there are no fins and heat transfer is poor but at the same time permitting free access to the unions 22 for removal of the tubes 19. In the central portion of the sub-assembly structure 3 there is a supporting channel member 27 which bears against the fins on the tubes 19 to prevent lateral movement and which acts as a support for the top and bottom wall channel members 11 and 12. On the outer sides of tubes 19 there are a pair of tube supporting members 28 which are shown in a detail sectional view in Fig. 7. The member 28 comprises a large channel member 29 and a small channel member 30 inverted and secured therewithin with a corrugated sheet metal member 31 secured to the small channel member 30. The corrugations of the member 31 fit the fins of the tubes 19 and support them.

Positioned longitudinally of the outer casing 2 are angle members 32, 33, 34 and 35 which cooperate with the edges of the top and bottom walls 11 and 12 of the sub-assembly structure 3 for guiding the same into the casing 2. The members 32, 33, 34 and 35 extend to the top and bottom edges respectively of the fins of the extreme top and bottom runs (see Fig. 4) of the rows of tubes 19 and thereby function to prevent bypassing of air around the top and bottom edges of the bank of tubes 19 and also to close the space between top and bottom walls 11 and 12 and the top and bottom walls 4 and 5. The end wall 13 of the sub-assembly structure 3 has a plurality of holes 36 around the edge thereof which fit a plurality of studs or other bolts or clamping means 37 in open end of the casing 2 for securing the sub-assembly 3 to the casing 2.

The operation of this assembly should be clear from the foregoing description but will be restated for clarity. The open sides of the casing 2 and the sub-assembly structure 3 are in registry when the apparatus is assembled and an air stream is directed through the bank of tubes 19 for heating or cooling. Heat transfer fluid is circulated through the tubes 19 entering through the header 15 and leaving through the header 16. As was heretofore described the baffle 26 and the end wall 14 function to prevent bypassing of air around the respective ends of the tubes 19 where there are no fins and heat transfer is poor. Similarly the guide rails or angles 32, 33, 34 and 35 prevent air from bypassing around the edges of the bank of tubes. The slots 25 in the end wall 14 serve the dual purpose of supporting the reverse bend portion of the tubes 19 and permit expansion and contraction of the tubes without distortion. It should also be noted that this assembly has the additional advantage of permitting removal and insertion of individual tubes in the bank of tubes 19 so that for maintenance and repair the entire assembly need not be dismantled for the removal of a single tube.

Having thus described the invention, what is claimed and is desired to be secured by Letters Patent of the United States is:

1. A heat exchanger assembly comprising an outer casing adaptable to be secured in a predetermined position, said casing comprising a rectangular framework having closed top and bottom walls and a closed end wall and having an open end and open sides, an inner casing slidably fitting said outer casing and adapted for insertion or removal through said outer casing open end for ease of assembly and maintenance, said inner casing comprising a rigid rectangular structure having closed top and bottom and opposite end walls and having open sides registering with said outer casing open sides, said outer and inner casing top and bottom walls having cooperable side flanges forming guide rails, said outer casing flanges also closing the spaces between said top walls and said bottom walls, a pair of headers secured within said structure and spaced from one of said inner casing closed end walls, one of said headers having an inlet connection and the other having an outlet connection, said connections extending through apertures in said one end wall, a plurality of substantially U shaped finned heat transfer tubes positioned longitudinally of said inner casing and having their inlet ends connected to said one header and their outlet ends connected to said other header, a baffle member of T shaped cross-section, having a stem portion and a cross portion, positioned between said headers and carried by said one wall, said stem portion being secured to said one wall and extending substantially the length of said headers, said cross portion extending substantially the length of said headers and laterally into overlapping relation to the tube fins, and means for supporting said tubes by their reverse bend portions at the other of said inner casing closed end walls.

2. A heat exchanger assembly comprising a casing having closed top and bottom end walls and open sides for passage of air therethrough, a pair of headers at one of said closed end walls, one of said headers having an inlet connection and the other having an outlet connection, a plurality of substantially U-shaped finned heat transfer tubes positioned longitudinally of said casing and having their inlet ends connected to said one header and their outlet ends to said other header, the other of said closed end walls being formed to have an end wall portion and side wall portions, said side wall portions being positioned to shield the reverse bend portions of said tubes to prevent bypassing of air around the finned portions thereof, each

of the reverse bend portions of said tubes having at least two oppositely directed projecting members, said side wall portions having a plurality of longitudinal slots in which said projecting members are positioned, and said slots performing the dual function of supporting the reverse bend portions of said tubes and permitting individual thermal expansion and contraction of said tubes.

3. A heat exchanger assembly comprising a casing having closed top and bottom and end walls and open sides for passage of gas therethrough, a pair of headers at one of said closed end walls, one of said headers having an inlet connection and the other having an outlet connection, a plurality of substantially U-shaped finned heat transfer tubes positioned longitudinally of said casing, coupling members detachably connecting the tube inlet ends to said one header and the tube outlet ends to said other header, means positioned at the other of said closed end walls for supporting said tubes at their reverse bend portions, a T-shaped baffle having a stem portion and a cross portion, the stem portion being positioned between said headers and extending substantially the entire vertical height of said casing and extending outward between the inlet and outlet ends of said tubes to a line beyond said coupling members at the beginning of the finned portion of said tubes, said cross portion also extending substantially the entire height of said casing and into overlapping relation to the tube fins, and said baffle blocking the flow of gas over said coupling members thereby causing the gas flow at the header ends of said tubes to be directed across the finned portion of said tubes.

4. A heat exchanger assembly comprising a casing having closed top and bottom and end walls and open sides for passage of air therethrough, a pair of headers at one of said closed end walls, one of said headers having an inlet connection and the other having an outlet connection, a plurality of substantially U-shaped finned heat transfer tubes positioned longitudinally of said casing and having their inlet ends connected to said one header and their outlet ends to said other header, the other of said closed end walls being formed to have an end wall portion and side wall portions, said side wall portions being positioned to shield the reverse bend portions of said tubes to prevent bypassing of air around the finned portions thereof, each of the reverse bend portions of said tubes having a pair of oppositely alined projections, said side wall portions having a plurality of longitudinal slots in which are positioned said alined projections, said slots performing the dual function of supporting the reverse bend portions of said tubes and permitting individual thermal expansion and contraction of said tubes, a T-shaped baffle positioned between said headers and extending substantially the entire vertical height of said casing and extending outward between the inlet and outlet ends of said tubes to the beginning of the finned portion of said tubes, and said baffle being operable to prevent flow of air over the end portions of said tubes connected to said headers and thereby causing the air flow to be directed across the finned portion of said tubes.

5. A heat exchanger assembly comprising a casing having closed top and bottom and opposite end walls and open sides for passage of air therethrough, a pair of headers at one of said closed end walls, one of said headers having an inlet connection and the other having an outlet connection, a plurality of heat transfer tubes positioned longitudinally of said casing, each of said tubes including a return bend coupling member, said tubes each having their inlet ends connected to said one header and their outlet ends to said other header, said tubes being individually connected to said headers by union type fittings to permit individual insertion and removal of tubes in said casing for ease of maintenance, means blocking air flow across the header end portions of said tubes, the other of said end walls comprising a channel member with out-turned flanges secured to said top and bottom walls, the side portions of said channel member having parallel slots opening toward said headers through said out-turned flanges, and carrier members projecting oppositely from the outer sides of each of said coupling members and extending into said slots, said carrier members supporting said tubes on the side edges of said slots.

6. A heat exchanger assembly comprising a casing having closed top and bottom and end walls and open sides for passage of air therethrough, a pair of headers at one of said closed end walls, one of said headers having an inlet connection and the other having an outlet connection, a plurality of substantially U-shaped finned heat transfer tubes positioned longitudinally of said casing and having their inlet ends connected to said one header and their outlet ends to said other header, said tubes being individually connected to said headers by union type fittings to permit individual insertion and removal of tubes for ease of maintenance, the other of said closed end walls being formed to have an end wall portion and side wall portions, said side wall portions being positioned to shield the reverse bend portions of said tubes to prevent bypassing of air around the finned portions thereof, each of the reverse bend portions of said tubes having a pair of oppositely alined projections, said side wall portions having a plurality of longitudinal slots in which are positioned said alined projections, said slots performing the dual function of supporting the reverse bend portions of said tubes and permitting individual thermal expansion and contraction of said tubes, a T-shaped baffle positioned between said headers and extending substantially the entire vertical height of said casing and extending outward between the inlet and outlet ends of said tubes to the beginning of the finned portion of said tubes, and said baffle being operable to prevent flow of air over the end portions of said tubes connected to said headers and thereby causing the air flow to be directed across the finned portion of said tubes.

7. In a heat exchanger, a plurailty of heat transfer tubes adapted to be positioned in and transverse to the path of flow of a fluid medium, said tubes each having a return bend portion comprising a generally U-shaped coupling member having supporting ears extending laterally outward therefrom, an end wall member of generally U-shaped section on the planes of said tubes and having out-turned flanges, the side walls of said wall member having oppositely positioned guide slots each opening through one of said flanges, each of said coupling members being positioned between said side walls and having its supporting ears extending respectively into opposite ones of said slots and supported by the slot side edges for free guided expansion and contraction of said tubes.

8. In a heat exchanger, an inlet header having an inlet pipe, an outlet header extending parallel to said inlet header and having an outlet pipe, a wall member having an aperture receiving said inlet pipe and having an aperture receiving said

outlet pipe, a plurality of indivdually finned heat transfer tubes, coupling members detachably connecting the tube inlet and outlet ends to said inlet and outlet headers, respectively, and a T-shaped baffle member having a stem portion and a cross portion, said stem portion extending substantially the length of said headers and from said wall member through the space between said headers and projecting beyond said coupling members, said cross portion extending substantially the length of said headers and laterally into overlapping relation to the tube fins.

LANCE L. SIMMONS.

REFERENCES CITED

The following references are of record in the file of this patent:

UNITED STATES PATENTS

Number	Name	Date
1,592,538	Price	July 13, 1926
1,787,444	French	Jan. 6, 1931
1,787,448	Holton et al.	Jan. 6, 1931
1,817,948	Smith	Aug. 11, 1931
1,832,147	Soule	Nov. 17, 1931
1,841,361	Bulkeley	Jan. 19, 1932
1,884,210	Potter	Oct. 25, 1932
1,976,102	Young et al.	Oct. 9, 1934
2,115,567	Anderson	Apr. 26, 1938
2,287,086	Lea	Mar. 31, 1942