Feb. 11, 1964 F. SIMON 3,120,805

CLEANING DEVICE FOR THE BLANKET CYLINDERS IN OFFSET PRINTING MACHINES

Filed Nov. 8, 1961 3 Sheets-Sheet 1

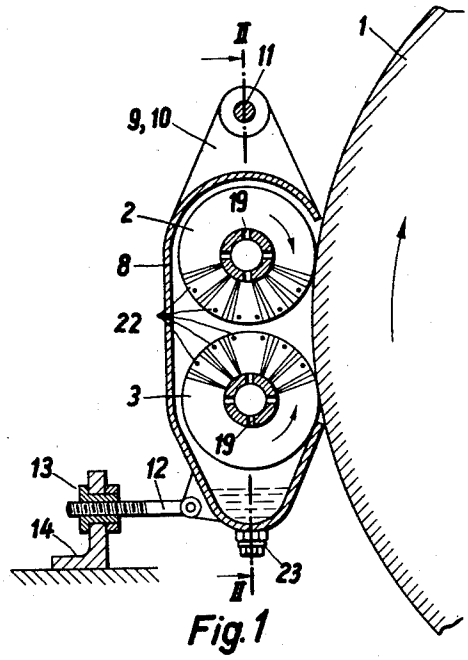

Fig. 1

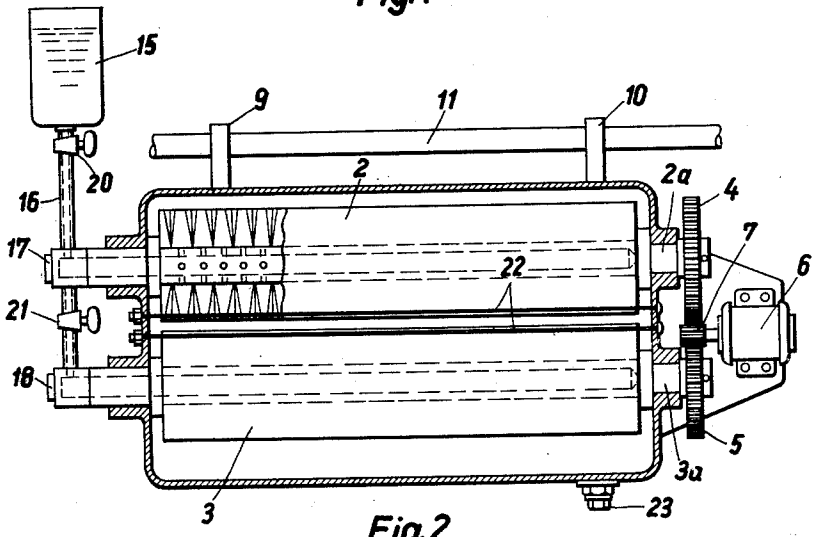

Fig. 2

Inventor:
FRITZ SIMON
By Hane and Nydick
ATTORNEYS

Feb. 11, 1964 F. SIMON 3,120,805
CLEANING DEVICE FOR THE BLANKET CYLINDERS
IN OFFSET PRINTING MACHINES
Filed Nov. 8, 1961 3 Sheets-Sheet 2

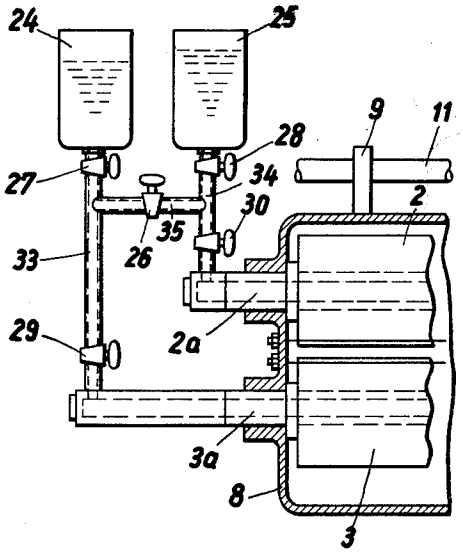

Fig. 3

Inventor:
FRITZ SIMON
By Hane and Nydick
ATTORNEYS

Feb. 11, 1964 F. SIMON 3,120,805

CLEANING DEVICE FOR THE BLANKET CYLINDERS IN OFFSET PRINTING MACHINES

Filed Nov. 8, 1961 3 Sheets-Sheet 3

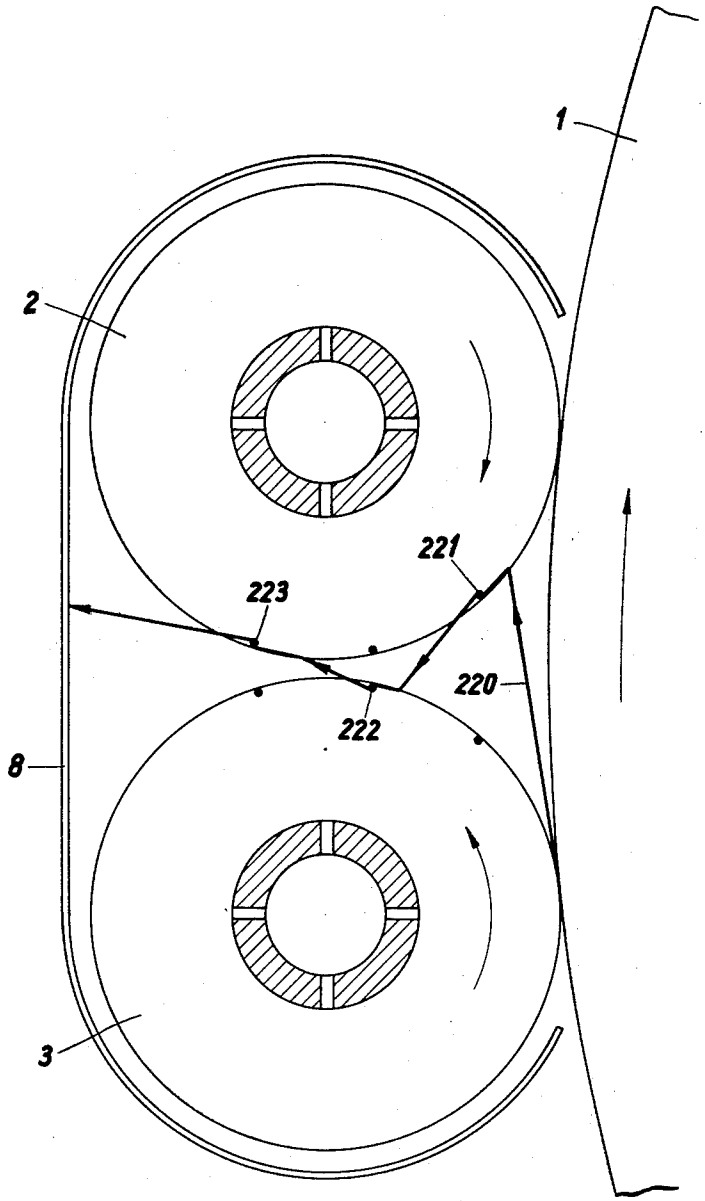

Fig. 4

Inventor:
FRITZ SIMON
By Howe and Nydick
ATTORNEYS

United States Patent Office 3,120,805
Patented Feb. 11, 1964

3,120,805

CLEANING DEVICE FOR THE BLANKET CYLINDERS IN OFFSET PRINTING MACHINES

Fritz Simon, Stuttgart, Germany, assignor to Roland Offsetmaschinenfabrik Faber & Schleicher AG., Offenbach am Main, Germany, a German body corporate

Filed Nov. 8, 1961, Ser. No. 150,930
Claims priority, application Germany Nov. 19, 1960
7 Claims. (Cl. 101—425)

The conventional method of cleaning the blanket or other cylinders of offset printing machines by means of revolvable brush rollers is possessed of several disadvantages. One of these disadvantages consists in that the brushes which are at present used for cleaning do not contact the blanket cylinders directly but cooperate with them through the medium of a washing roller interposed between the cylinder and the actual brush rollers. These washing rollers remove dirt and smudge from the cylinders and subsequently become cleaned themselves by rotating brush rollers. This arrangement has not proved very satisfactory.

Another disadvantage accruing from the use of such washing rollers in the cleaning devices are the additional costs and a complicated adjustment of the different rollers. Besides, the efficiency of the cleaning device is much impaired by the employment of such additional rollers. It is considerably lower than it would be if the brush rollers were to contact with the blanket cylinder directly.

On the other hand, brush rollers, where they are used for direct contact with the cylinder, have the unpleasant effect to precipitate the removed particles and the washing liquid all over the neighbouring parts or devices, so that their employment without additional shielding means is not practical, particularly not in sheet printing machines. After the cylinder has been cleaned the collected dirt and the spent liquid are precipitated into the cylinder canal at the printing end of the cylinder.

The main object of the invention, therefore, is the provision of a cleaning device of the aforesaid type in which the aforesaid disadvantages are avoided.

Another object of the invention is the provision of a cleaning device in which the brushes of the revolvable brush rollers operate in direct contact with the blanket or other cylinder so as to enable a perfect cleaning of the latter without the aforesaid disadvantages.

A further object is the admission of the cleaning liquid to the revolving brushes without precipitating it to places where it might cause inconvenience.

A still further object is the provision of stripping means extending over the full length of the rollers and by the employment of which the brush rollers may be cleaned of any impurities so that the efficiency of the cleaning device will be increased still further.

With these and other objects in view the cleaning device in accordance with the invention comprises two closely adjacent brush rollers adapted to contact with the blanket cylinder directly and which are rotatable in mutually opposite direction, so that at their places of contact with the cylinder, their peripheral contact points move in a direction toward each other.

The shafts of the brush rollers are hollow for the cleaning medium to enter, and they are provided with radial bores through which the medium is allowed to escape into and between the bristles. This enables the brushes at their respective places of contact with the cylinder, each to precipitate the substances freed from the cylinder towards its neighbouring brush roller and thus prevent their being flung back in the direction of the cylinder. This action is augmented by the provision of stripping means in the way of the revolving bristles. The said stripping means preferably consists of wires stretched all

over the length of the brush rollers in opposition to the circumference each of its adjacent roller. Stripping means of this kind have the advantage of requiring little space even when provided in comparatively large numbers around the circumference of the brush rollers, and they do not require any additional fixing means.

In accordance with another feature of the invention the cleaning liquid may be supplied to each of the brush rollers separately, which allows the carrying out of the cleaning process with two different cleaning media at the same time. As is known to those skilled in the art, the smudge which collects on the rubber blanket of the cylinder is composed in part of dried ink, but in the greater part of paper fibres and particles of glue. This layer, therefore, must first be soaked with water before an ink dissolving agent can be applied. The invention provides that one of the brush rollers can be supplied with water and the other with an appropriate dissolvent.

The spent cleaning medium is precipitated by the brushes through their rotation into the brush casing where it collects in a trough at the bottom of same.

The accompanying drawings illustrate a cleaning device in accordance with the invention purely diagrammatical by way of example. In these drawings—

FIG. 1 is a cross section through one form of the cleaning device, and

FIG. 2 a longitudinal section through the same on line II—II of FIG. 1.

FIG. 3 represents a partial section similar to FIG. 2 with a modification of the cleaning liquid supply means, while

FIG. 4 illustrates the way which the dislodged smudge and other particles are forced to take.

In the drawings the blanket cylinder **1** is contacted at some place of its circumference by two brush rollers **2** and **3**, which are driven by an electric motor **6**, or any other driving means, through a pinion **7** acting, for example, on one of the gear wheels **4** or **5**. The brush rollers **2** and **3** are journaled in a casing **8** which is pivoted by means of webs **9** and **10** to a bar **11** of the printing machine. Hinged to the casing **8** near the bottom thereof is a screw threaded bolt **12** by which the casing can be adjusted, as by means of a nut **13**, in relation to the cylinder **1**. The nut **13** is fitted to a stationary bearing **14**. By turning the nut the whole casing will pivot on the bar **11** so that the brush rollers will be moved towards or away from the circumference of the cylinder **1**. The driving shafts **2***a* and **3***a* of the brush rollers are hollow, so that the cleaning medium can enter between the bristles of the brushes from the receptacle **15** through the conduits **16**, sockets **17** and **18**, and the bore holes **19** in the walls of the shafts **2***a* and **3***a*. Valves or taps **20**, **21** are provided, by means of which the quantity of the medium to be admitted can be regulated.

A comparatively large number of wires **22** is stretched between the end faces of the casing **8** with which the bristles of the brushes contact during their rotation so as to fling off the adhering impurities and the liquid matter from the cylinder. The spent liquid finally collects in the trough-like bottom of the casing, from which it may be drained by opening the plug **23**.

In the modification which is illustrated in FIG. 3 two receptacles **24** and **25** are provided for the reception of two preferably different cleaning liquids, the conduits of which are connected to each other and to the hollow shafts **2***a* and **3***a* of the brush rollers **2** and **3**, the arrangement being such as to enable each of said shafts to be supplied with liquid either from its pertaining receptacle or both from only one of them. Valves or taps **26** to **30** are provided for the purpose in the conduits **33**, **34**, **35**, through which the cleaning liquid is admitted to the shafts. While the conduit **33** normally connects the re-

ceptacle 24 to the hollow shaft 3*a* and the conduit 34 the receptacle 25 to the shaft 2*a*, there is arranged a bypass or cross conduit 35 through which each of the shafts may be connected to the other receptacle normally not pertaining to it. Having the taps 27 and 28 open and the tap 26 closed, the liquid will flow from the receptacle 25 to the shaft of the roller 2 and from the receptacle 24 to the shaft of the roller 3. The taps 29 and 30 serve to regulate the flow of the liquid. Closing the tap 28 while the taps 27 and 26 are open, then both of the hollow shafts will receive liquid from the container 24. Closing tap 27 and leaving the taps 26 and 28 open, then liquid will be supplied to both shafts from the receptacle 25 only.

FIG. 4 illustrates the manner in which the cylinder 1 is cleaned in accordance with the invention by the brush rollers 2 and 3, and how the cast-off impurities are precipitated in the direction of the vertical wall of the casing 8. In order to render the action more comprehensive, the path of only a single particle is shown after it has been dislodged from the printing cylinder by the brush roller 3. As is shown by the straight line 220 it is first precipitated against the brush roller 2 and moved to one of the strippers, say 221, which throws it in the direction of the roller 3 which conveys it to one of its strippers, say 222, which flings it back to the roller 2, where it contacts the stripper 223, from which it is eventually precipitated against the vertical wall of the casing 8. From here the impurities and the thrown-off liquid trickle down into the trough at the bottom of the casing as has been described in connection with FIG. 1.

What I claim is:

1. A cleaning device for cleaning a printing cylinder of an offset printing machine, said device comprising a pair of brush rollers mounted rotatably about parallel axes, means for supplying a cleaning liquid to said brush rollers, a common housing for both said brush rollers, including an opening to expose part of the peripheral surfaces of both brush rollers, said exposed peripheral parts of the rollers constituting the working parts thereof engageable with the surface of a cylinder to be cleaned, drive means for rotating said brush rollers in mutually opposite directions such that the exposed roller parts revolve toward each other, and a stripping means for each of said rollers, each of said stripping means including an elongated substantially rigid stripping member extending lengthwise of the respective roller whereby liquid from the rollers and stripped off solid particles are propelled toward the housing wall opposite said opening.

2. A cleaning device according to claim 1 wherein said housing is mounted pivotally about a spatially stationary axis, and means are provided for adjusting the position of said housing in reference to the surface of a cylinder to be cleaned.

3. A cleaning device for cleaning a printing cylinder of

an offset printing machine, said device comprising a pair of cylindrical brushes, a pair of hollow perforated shafts each fixedly mounting one of said brushes, a housing, said shafts being rotatably mounted in said housing parallel to each other, said housing including an opening to expose part of the peripheral surfaces of both brushes, said exposed parts of the brushes constituting the working parts thereof engageable with the surface of a cylinder to be cleaned, conduit means connected with said hollow shafts for supplying a cleaning liquid thereto whereby cleaning liquid is fed to the brushes through the apertures in the shafts, drive means for rotating said brushes in mutually opposite directions such that the exposed brush parts revolve toward each other, and a stripping means for each of said brushes, each of said stripping means including an elongated, substantially rigid stripping member extending lengthwise of the respective brush whereby liquid from the brushes and stripped off solid particles are propelled toward a housing wall opposite said opening.

4. A cleaning device according to claim 3 wherein each of said stripping members comprises several circumferentially spaced wires stretched between opposite sides of said housing along the length of the respective brush in engagement with the peripheral part thereof.

5. A cleaning device according to claim 4 wherein said brushes have radially oriented bristles, and wherein said wires extend between said bristles near the periphery of the brushes.

6. A cleaning device according to claim 3 and comprising several supply containers for cleaning liquid, second conduit means connecting said supply containers to the first conduit means connected to the hollow shafts, and valve means in said conduit means for selectively feeding liquid from the containers to the shafts.

7. A cleaning device according to claim 6 wherein said second conduit means are interconnected and wherein said valve means include independently operable valves in said first conduit means, said second conduit means and said interconnection to supply the brushes through the hollow shafts selectively from one of said containers or several of said containers and to regulate the flow of liquid supplied to the brushes through the shafts.

References Cited in the file of this patent

UNITED STATES PATENTS

479,346	Birge	July 19, 1892
664,135	Dufour	Dec. 18, 1900
901,978	Mally et al.	Oct. 27, 1908
1,089,453	Wood	Mar. 10, 1914
1,858,909	Trist	May 17, 1932
2,680,938	Peterson	June 15, 1954
2,731,916	Koch	Jan. 24, 1956