F. SCHIMMEL.

APPARATUS FOR SETTING AND CASTING SEPARATE TYPES ON LINOTYPE MACHINES.

APPLICATION FILED JAN. 18, 1909.

1,068,936.

Patented July 29, 1913.

7 SHEETS—SHEET 1.

Fig.1.

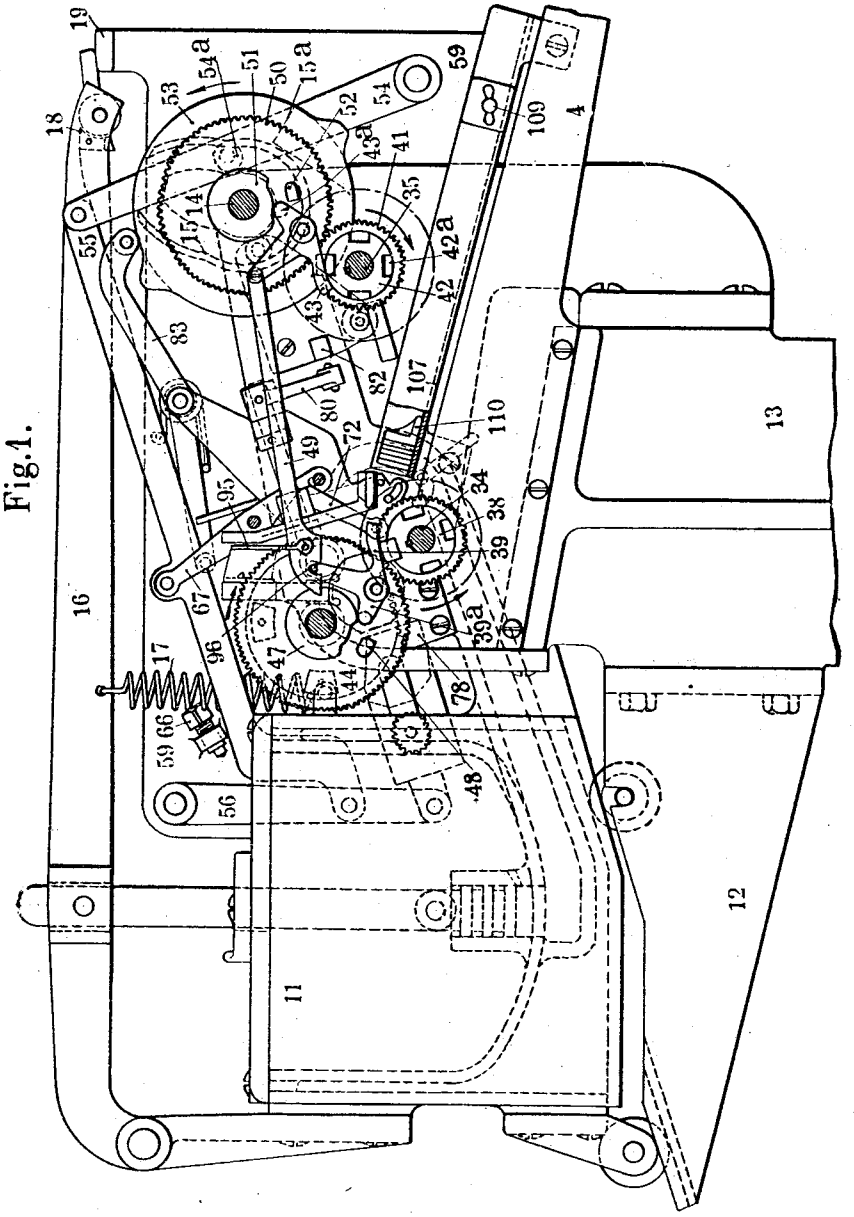

WITNESSES

W. M. Avery

A. H. Davis

INVENTOR

Franz Schimmel

BY

Munn & Co

ATTORNEYS

F. SCHIMMEL.

APPARATUS FOR SETTING AND CASTING SEPARATE TYPES ON LINOTYPE MACHINES.

APPLICATION FILED JAN. 18, 1909.

1,068,936. **Patented July 29, 1913.**

7 SHEETS—SHEET 2.

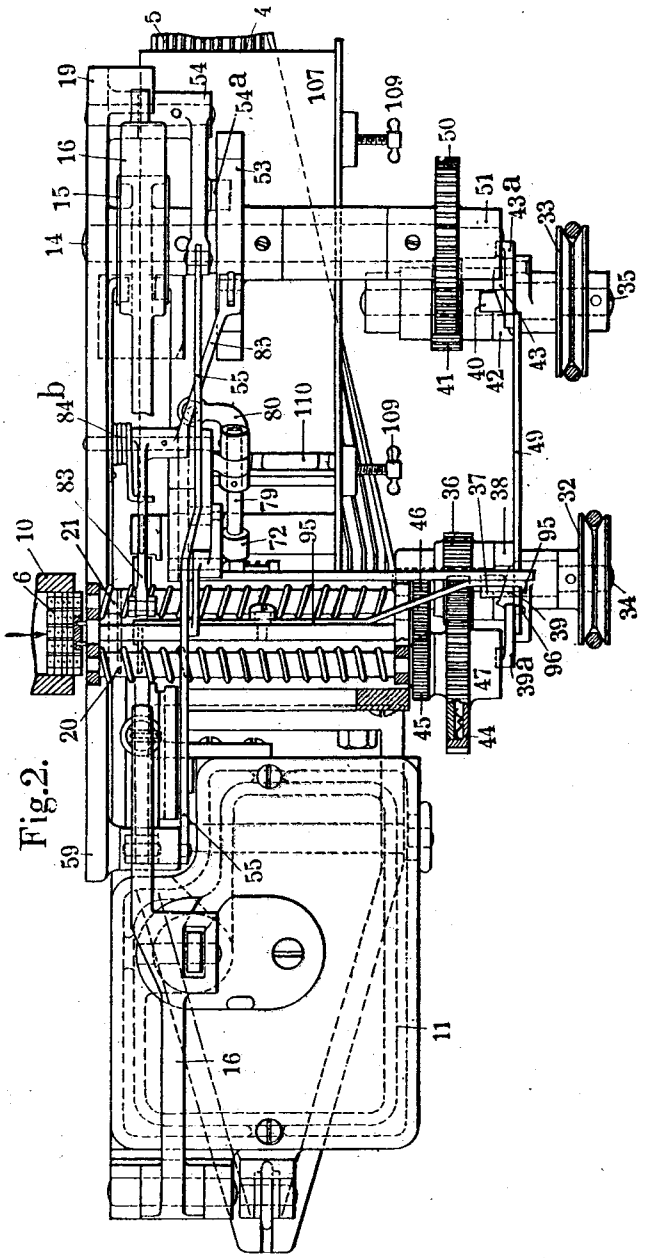

Fig. 2.

WITNESSES

W. M. Avery

A. B. Davis

INVENTOR

Franz Schimmel

BY Munn & Co

ATTORNEYS

F. SCHIMMEL.

APPARATUS FOR SETTING AND CASTING SEPARATE TYPES ON LINOTYPE MACHINES.

APPLICATION FILED JAN. 18, 1909.

1,068,936. Patented July 29, 1913.

7 SHEETS—SHEET 3.

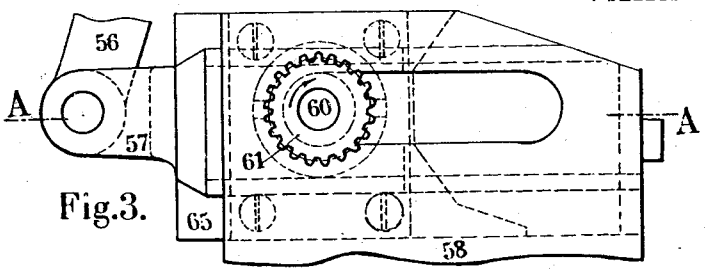

Fig.3.

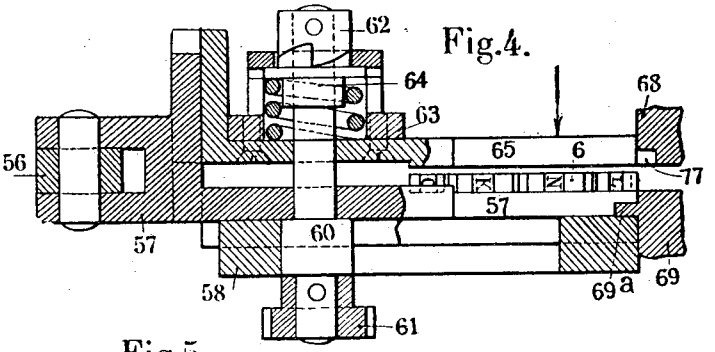

Fig.4.

Fig.5.

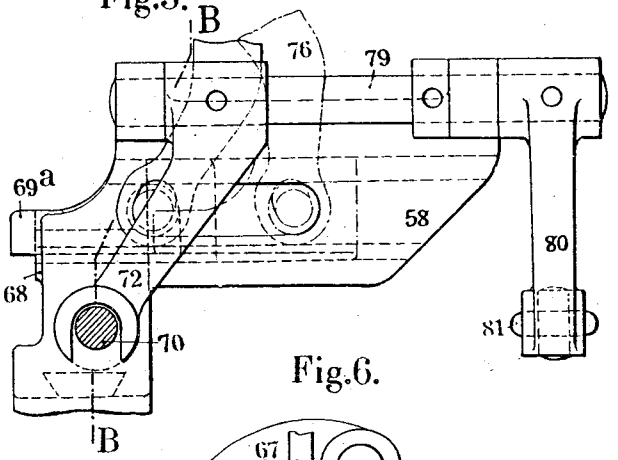

Fig.6.

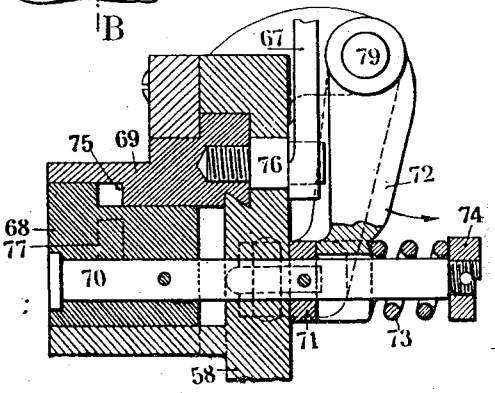

WITNESSES :

W. M. Avery

H. B. Davis

INVENTOR

Franz Schimmel

BY Munn & Co

ATTORNEYS

F. SCHIMMEL.

APPARATUS FOR SETTING AND CASTING SEPARATE TYPES ON LINOTYPE MACHINES.

APPLICATION FILED JAN. 18, 1909.

1,068,936. Patented July 29, 1913.

7 SHEETS—SHEET 4.

Fig. 7.

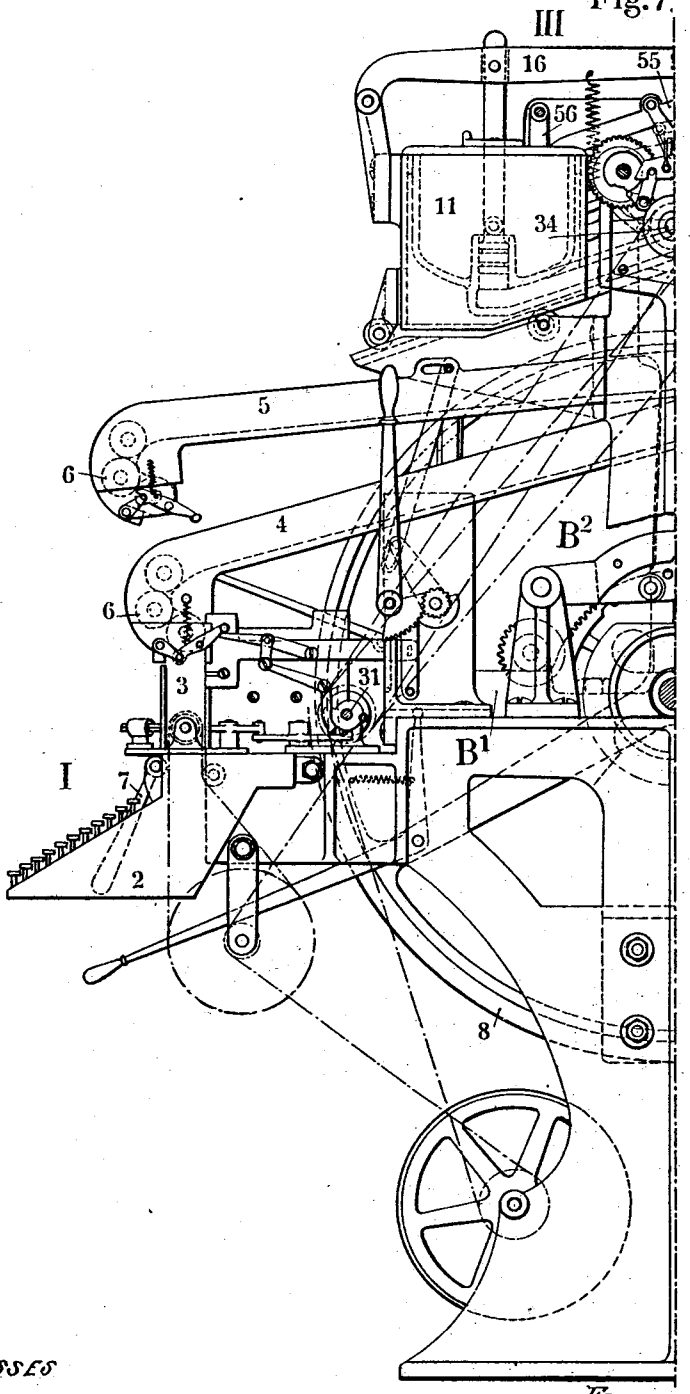

WITNESSES

W. M. Avery

A. H. Davis

INVENTOR

Franz Schimmel.

BY Munn & Co.

ATTORNEYS

F. SCHIMMEL.

APPARATUS FOR SETTING AND CASTING SEPARATE TYPES ON LINOTYPE MACHINES.

APPLICATION FILED JAN. 18, 1909.

1,068,936.

Patented July 29, 1913.

7 SHEETS—SHEET 5.

Fig. 7a

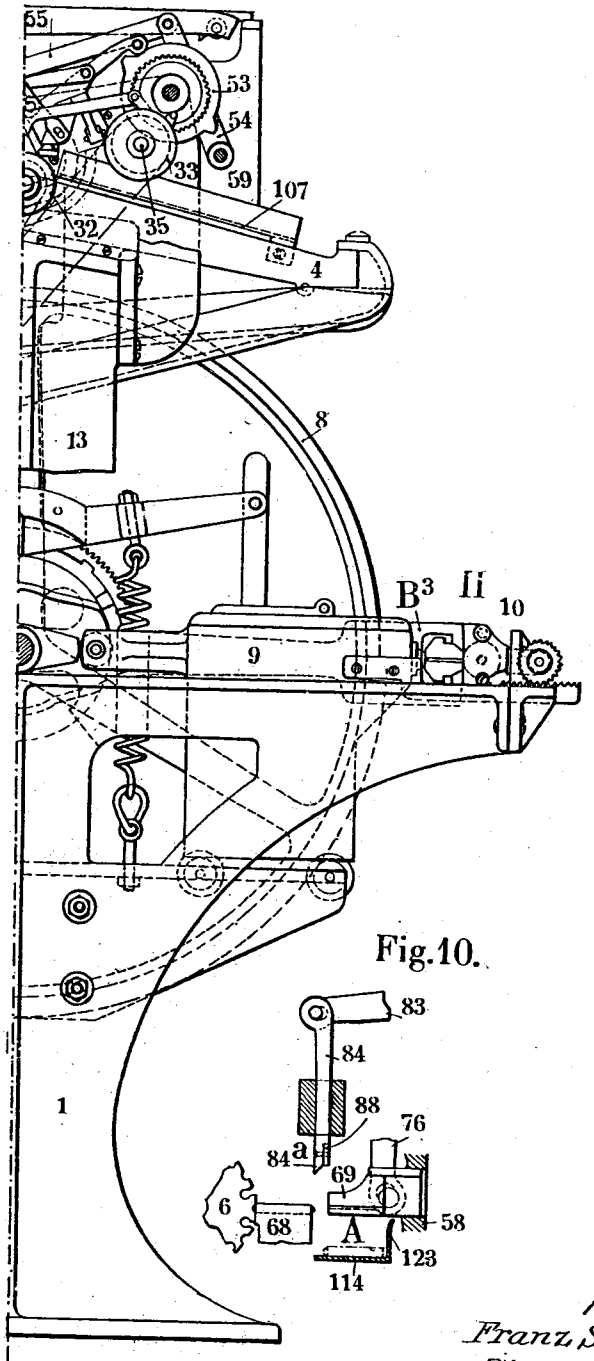

Fig. 10.

WITNESSES

W. M. Avery

A. B. Davis

INVENTOR

Franz Schimmel

BY Munn & Co

ATTORNEYS

F. SCHIMMEL.

APPARATUS FOR SETTING AND CASTING SEPARATE TYPES ON LINOTYPE MACHINES.

APPLICATION FILED JAN. 18, 1909.

1,068,936. **Patented July 29, 1913.**

7 SHEETS—SHEET 6.

Fig.8.

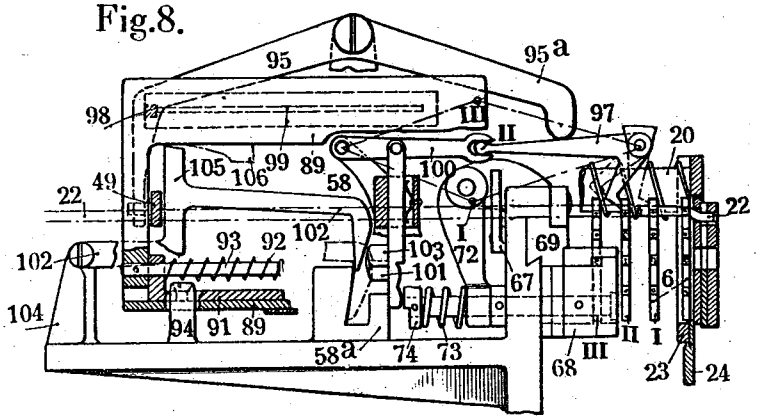

Fig.9.

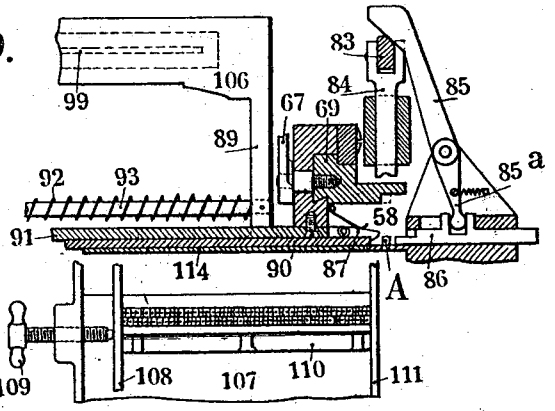

Fig.11.

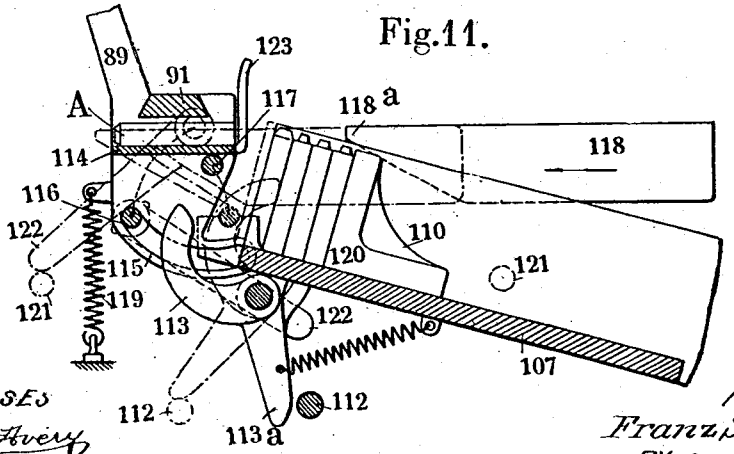

WITNESSES

W. M. Avery

A. H. Davis

INVENTOR

Franz Schimmel

BY Munn & Co

ATTORNEYS

F. SCHIMMEL.

APPARATUS FOR SETTING AND CASTING SEPARATE TYPES ON LINOTYPE MACHINES.

APPLICATION FILED JAN. 18, 1909.

1,068,936

Patented July 29, 1913.

7 SHEETS—SHEET 7.

Fig. 13.

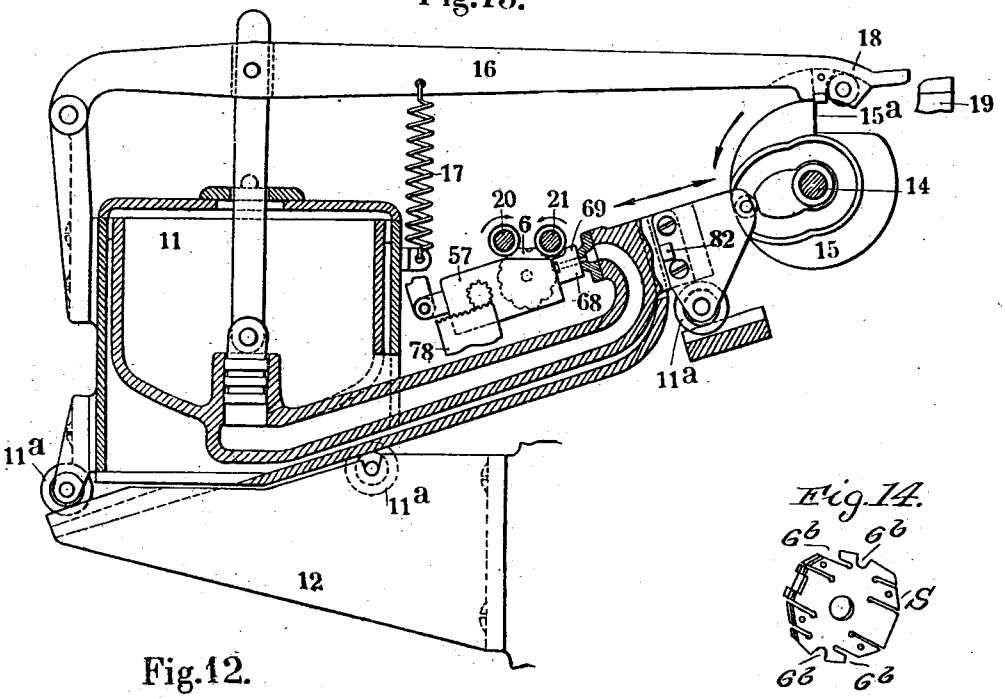

Fig. 12.

Fig. 14.

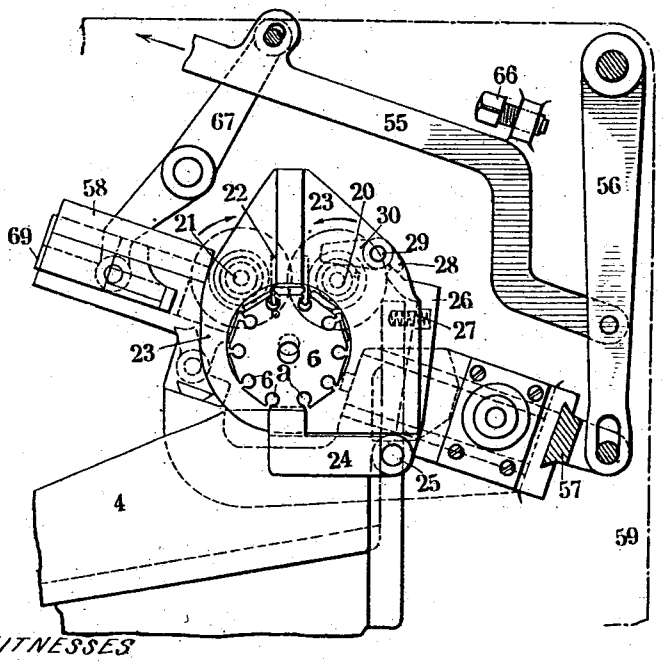

WITNESSES

W. M. Avery

A. H. Davis

INVENTOR

Franz Schimmel

BY Munn & Co

ATTORNEYS

UNITED STATES PATENT OFFICE.

FRANZ SCHIMMEL, OF MONTROUGE, FRANCE.

APPARATUS FOR SETTING AND CASTING SEPARATE TYPES ON LINOTYPE-MACHINES.

1,068,936. Specification of Letters Patent. Patented July 29, 1913.

Application filed January 18, 1909. Serial No. 473,027.

To all whom it may concern:

Be it known that I, FRANZ SCHIMMEL, of 77 Rue de Bagneux, Montrouge, Seine, Republic of France, engineer, have invented an Improved Apparatus for Setting and Casting Separate Types on Linotype-Machines, of which the following is a full, clear, and exact description.

Although machines for casting lines of type present great advantages for composing or setting up matter for printing in cases in which subsequent correction is not required, in many other cases it is preferable to adopt a system or machine for casting separate type, which facilitates correction, but the machines heretofore constructed for composing or setting up matrices to cast separate types are very complicated and generally require the attention of two operators, thus work done by them is somewhat expensive as compared with the cost of work done by machines for casting lines of type which only require one operator.

The present invention has for its object, an improved machine which permits matter for printing, to be both cast in lines or slugs, and cast in separate types. A type-composing and casting machine operated by a single operator whose work is limited to the actuation of the keys of the key-board, is thus provided in which composed matter is cast in lines and also in separate types, this being effected without loss of time and without the operator being delayed in any way in doing his work. With this improved arrangement, it is also possible to produce at will castings in either one or the other of the two styles; for this purpose it is only necessary to put out of operation one of the casting devices; the matter set up in matrices is then cast in lines or in separate types.

This improved arrangement is applicable to any machine for casting lines. It is hereinafter described, by way of example, as applied to a rotary machine for composing or setting up and casting lines of type described in the specification of Letters Patent application filed 24th August 1905 under Serial No. 275693. In order to apply this arrangement to existing machines for casting lines of type, it is only necessary to adapt its construction to the form of the matrices employed, and to the construction of each particular machine, and this can be done without departing from the nature of the present invention.

The essential feature of the present invention consists in taking a separate casting from each matrix in a line of matrices composed on the machine for casting lines of type, after the line has been cast, this being effected before the distribution or return of the matrices into their magazines. As the operations of casting separate types from the separate matrices and the distribution of the latter, are effected during the composing or setting up of a second line, no loss of time results and in this manner the matter to be printed is set up in duplicate by a single machine controlled by a single operator.

The method of operation is as follows: The line of matrices composed or set up by the machine for casting lines of type is brought automatically to the metal pot where a line of type casting is made; it is then carried to the distributer where the individual matrices of which the line is composed, are separated and classified or sorted in order that they may be returned to their respective magazines. In this operation, the matrices are certainly separated from each other but they are retained in the order in which they have been arranged by the operation of the key-board, whereby if these characters on the matrices are separately cast afresh, the separate type thus produced form the same matter for printing as the line of type cast in a single block or slug. The distributer first separates the matrices by raising them one by one. Thus, when each of the matrices of the line is brought in front of the distributer it is raised, seized by two screw-threaded rods and carried along by a convolution of the thread on each of these rods; the following convolution drives the second matrix raised, the third convolution the third matrix and so on. As the matrix advances it momentarily stops or pauses at the place where the casting is to take place, this stoppage or pause being brought about by a temporary stoppage of the distribution mechanism. This distribution mechanism and the casting mechanism are interconnected in such a manner that, at the moment when the matrix is raised and transferred, the casting mechanism is at rest, then, when the distributer has completed one revolution, which

advances by one step the matrices engaged on the screw-threaded rod, the actuating mechanism of the distributer is automatically thrown out of gear and at the same time the casting mechanism is thrown into gear. The shaft which actuates the casting mechanism then makes one complete revolution and is then automatically thrown out of gear; the distributer is then thrown into gear again and so on.

The casting mechanism comprises a metal pot which is pressed against a detachable mold as soon as the matrix at rest in front of the aperture has been engaged in a kind of clip or vise. This clip or vise operates to insure the alinement of the matrix, to inclose the latter and to adjust the size or opening of the mold according to the thickness of the matrix. Before the shaft driving the casting mechanism completes one revolution, the clip or vise is detached from the matrix, the cast type is cut off, withdrawn from the mold and set in line. Each matrix after a separate type has been cast therefrom, slides on to two semi-circular distributing bars and is then advanced by two screw threaded rods in the conveyer and falls through a corresponding notch recess in the distributing bar, into a magazine, whence it can be again taken for use. When an entire line has been cast in separate types, the casting mechanism is thrown out of gear automatically and the distributing mechanism alone continues to operate in order to bring the matrices still suspended from the distributing bars, after they have been used for casting type, up to the recesses in the chute. The finished line of types is pushed into a galley by projections fitted to arms carrying the matrix carriers. If the following line of matrices is then pressed on to the distributing bars, the first matrix in this line effects the throwing into gear of the casting mechanism, and a new line is cast as above described.

In the accompanying drawings, given by way of example only, Figure 1 is a side elevation of the improved mechanism for casting type showing more especially the arrangement for effecting a successive throwing into and out of gear of the casting mechanism and the distributing mechanism, and Fig. 2 is a plan thereof. Fig. 3 is a side view of the clip or vise for holding the matrices. Fig. 4 shows a horizontal section on the line A—A, Fig. 3. Fig. 5 is an elevation of the casting mold. Fig. 6 is a section on the line B—B, Fig. 5. Figs. 7 and 7ª are a side elevation of a complete machine for casting lines of the kind described in specification Serial No. 275093, of 1905, having combined therewith the present improved arrangements for casting separate types. Fig. 8 is a detail view illustrating the means for throwing the casting mechanism into gear by a movement of a matrix and also illustrating the manner of adjusting the mold for casting spaces or quads. Fig. 9 is a detail view of means for bringing the cast type into line. Fig. 10 is a detail view of means for trimming the cast type and for removing it from the upper part of the mold. Fig. 11 is a detail view of means for flattening or leveling the type composing a line and for introducing the same into a galley. Fig. 12 is a front view of the distributer with the clip or vise and the casting mold. Fig. 13 is a diagrammatic view showing the position of the melting pot, the mold and the clip or vise relatively to the matrix during the operation of casting. Fig. 14 is a perspective view of a spacer.

To facilitate the description of the present invention, it should be observed that the machine described in specification Serial No. 275093, to which, by way of example, the arrangement forming the subject of the present invention is applied (Fig. 7) comprises a frame 1 on the front of which is fitted a key-board 2; above which a matrix collector 3 is fixed. Magazines 4 and 5 contain matrices 6 of a nearly round form which, when the keys of the key-board 2 are depressed, are seized in the magazine, which is then in communication with the collector 3, and are set up in a line in a composing frame attached to the collector 3. When the line is completed, a lever 7 is operated which moves the filled composing frame to the lowest part of a guide wheel 8; a second empty composing frame then takes the place of the filled frame and matrices can be immediately fed into this empty frame to compose a new line. The filled composing frame in passing around the guide wheel 8 is subsequently brought up to the metal pot 9, where the line is cast. The line of matrices is then brought, by a fresh operation of the lever 7, to the upper part of the guide wheel where it is distributed, during which operation the line which has been composed or set up in a composing frame during the casting of the line first considered, is brought in its turn to the casting position. Each composing frame 10 is thus stopped in three different positions; the composition or setting up of the line, takes place in the position I, the casting in the position II and the distribution in the position III.

As has been mentioned above, on arrival in the position III the matrices are separated from each other and returned to their magazines through their respective conduits or passages. For this reason, the mechanism for casting separate types is arranged above the matrix magazines 4 and 5, in such a manner that the matrices, which have just been separated from each other first serve for casting the separate types and then fall

into the conduits whence they are taken afresh for setting up other lines.

Figs. 1 and 2 show the arrangement of a complete mechanism for casting type. The metal pot 11 is mounted on an inclined support 12. This latter is fixed on a support 13 which, in a machine for casting lines or slugs, serves to bear the magazines 4 and 5. The oblique position which the melting pot assumes on its support, corresponds to the position of the matrix from which the type is to be cast, the matrix being at this time suspended on the distributing bars.

Fig. 13 shows clearly the respective positions of the matrix 6 and of the metal-pot. In the prolongation of the main axis is arranged the main shaft 14 of the casting machine (Figs. 1, 2 and 13); this shaft 14 bears a cam 15, by means of which the metal pot is pressed against the mold and the matrix, and is afterward withdrawn when the casting is completed. This cam 15 also actuates the pump lever 16. This lever is controlled by a spring 17. It bears at its end a projection and a roller, and falls from a support 19 on to the cam 15 at the moment when the metal pot is pressed against the mold, and remains on this cam until the latter, in turning in the direction indicated by the arrow, allows the lever to fall into the recess 15^a; the pump then pumps liquid metal into the mold and thus the casting of the type is effected.

The method of operation is as follows: The matrices 6 passing out of the composing frame 10 (Fig. 2), are pushed, in the direction indicated by the arrow, on to the distributing bars where they are seized by two screw threaded rods 20 and 21 and conveyed to the place where the casting is to be made. The separation of the matrices is shown clearly in Fig. 8. The matrices 6 issuing from the composing frame engage two distributing bars 22, the ends of which are in line with perforations in the matrices, which are guided by these bars; immediately after the exit of the matrices from the composing frame, the bars incline slightly upward. Under the action of the horizontal push which is applied to them in the composing frame, the matrices immediately mount on to these bars. In order to prevent them from arriving in the distributer all at once, the forward ascending movements of the matrices are prevented by a plate 23 which is formed with an aperture corresponding in form to that of the matrices (Fig. 12). This aperture is higher than the matrices which, as they pass out of the composing frame, are individually raised successively by a lever 24 which brings them opposite to the aperture in the distributing plate 23. At this moment, the screw-threaded rods 20 and 21 are exactly in a position such that the starting of the threads engage behind the matrix raised by the lever 24 and these threads carry the matrix along. During the raising of a matrix by the lever 24, the following matrix is stopped and held back until the two screw-threaded rods have made one complete revolution. These screw-threaded rods 20 and 21 then seize this second matrix when it is raised and carry it along. Each convolution of the threads on the rods thus conveys a matrix and the said matrices are thus brought successively to the casting position. The lever 24 is mounted on a shaft 25 on which is keyed an arm 26 (Fig. 12). This latter is controlled by a spring 27 and is in contact with a cam 28 mounted on a shaft 29 carrying a finger or lever 30. At each revolution of the rod 20, the lever 30 is raised by a pin 10^a carried by the gearing driving the screw-threaded rods; the shaft 29 and, with it, the cam 28, receive a certain angular movement. When the cam 28 descends, the arm 26 is pressed against the spring 27 and causes a downward movement of the lever 24 which is afterward raised by the spring 27. In the descent of the lever 24 a matrix is pressed against the plate 23, this matrix is then raised and brought opposite to the aperture in the plate 23 and seized by the screw-threaded rods 20 and 21, as explained hereinabove.

As mentioned in the preamble to this specification, the screw-threaded rods 20 and 21 make one revolution advancing the matrices and then stop during the time necessary for the casting of the type. As shown in Fig. 7, the distributing mechanism and the casting mechanism are actuated by a common shaft 31 by means of two belts; one of these belts controls the distributing mechanism by means of the pulley 32, and the other belt controls the casting mechanism by means of the pulley 33. The pulleys 32 and 33, and the shafts 34 and 35 which bear them, rotate continuously. A toothed wheel 36 loosely mounted on the shaft 34 (Fig. 2), is provided with a clutch-pin or key 37, which is movable in this toothed wheel 36 and is pressed, by means of a spring arranged in the interior of the toothed wheel, against a clutch-ring 38 keyed on the motor shaft. This spring tends to cause the clutch-pin or key 37, to enter the notches of the ring 38; it is held in the unclutched position by a projection 39. As long as the projection 39 holds the clutch-pin or key out of engagement with the ring 38, the toothed wheel 36 remains at rest, but if the projection 39 is raised, the clutch-pin or key 37 enters a notch in the ring 38 and the wheel 36 is driven by the driving shaft 34. The shaft 35 is provided with a similar clutch comprising clutch-pin or key 40, arranged in a wheel 41 loose on the shaft, in order to put this wheel into or out of engagement

with a ring 42 keyed on the shaft. The clutch-pin or key is retained in its disengaged position by a projection 43.

The wheel 36 gears with a toothed wheel 44 fixed to a pinion 45 in engagement with a pinion 46, pinions 45 and 46, being fixed to rods 20 and 21 respectively. The wheel 36 thus drives both screw-threaded rods 20 and 21 which are thus turned in opposite directions. These rods are provided with right and left hand screw-threads respectively.

The toothed wheel 44 comprises a loose toothed ring (Fig. 2) supported by special springs, in order that neither the distributer nor the matrix shall be damaged if there is a defect in the operation. In such an event, the toothed ring of the wheel 44 would turn idly without appreciably straining the screw-threaded rods and other parts of the distributer. The distributer is thus stopped, when any defect occurs, although the toothed ring 44 will continue to rotate. The fault in operation may be notified to the operator by a suitable indicator.

The end 39^a of a lever bearing the clutch-tooth 39 rubs on the hub 47 of the toothed wheel 44 (Fig. 1). This hub is provided with a recess 47^a which, after one complete revolution of the hub 47, comes beneath the end 39^a which is thus forced to pass into this recess by a cam-piece 48 located on the gear 44 thus causing the lever to oscillate, and laying the clutch-tooth 39, which is wedge-shaped, against the clutch ring 38, as soon as the clutch-pin or key 37 comes into contact with the tooth 39, it is pushed back into the wheel 36, thereby unclutching the distribution mechanism. In oscillating, the lever which bears the tooth 39, also actuates a bar 49 pivotally attached to a lever bearing the clutch-tooth 43. This latter tooth moves out of the path of the clutch-pin or key 40 which under the action of its spring, engages in one of the recesses 42^a in the ring 42 which, as above mentioned, turns continuously. The wheel 41 and toothed wheel 50 keyed on the shaft 14, are thus set in rotation in the direction indicated by the arrows (Fig. 1).

The toothed wheel 50 is provided with a hub 51 (analogous to that of the toothed wheel 44), with which the end 43^a of the lever bearing the clutch-tooth 43 is in contact. When the wheel 53 has made one revolution, the end 43^a of this lever, pushed by a cam-piece 52 located on wheel 50, passes into a recess in the hub 51, so that the clutch tooth 43 is moved into the path of the clutch-pin 40, which rises on the inclined plane of the said clutch tooth 43 and becomes disengaged, thus throwing the casting mechanism out of gear. At the same time, the rod 49 is moved back and lifts the clutch projection 39, thereby throwing the distributing mechanism into gear. It will thus be seen that the casting and distributing mechanisms are actuated successively and that each of these mechanisms, when its driving wheel has completed one revolution, is stopped and automatically throws the other into gear. These operations are effected quite automatically without requiring any supervision. Moreover, the operator may, without leaving his seat at the front of the key-board, throw the shaft 31 out of gear and thus stop the mechanism for casting separate types.

As already shown, at each revolution of the rods 20, 21, the matrices advance through a distance equal to the pitch of the threads, *i. e.* one convolution. In this manner, the matrices arrive successively in the casting position which, in the example shown, is behind the fourth convolution, in which position the matrix is held stationary during the casting operation. For this purpose, while the casting mechanism is operative, the screw threaded rods being then stopped, the lever 54, carrying the roller 54^a, which engages in a groove of a cam 53, is moved toward the left, and moves a rod 55. The said cam 53 is keyed on the shaft 14 and is actuated by the toothed wheel 50. The rod 55 is pivotally attached at its other end to a lever 56. Fig. 1 shows the connection of the lever 54 with the lever 56; their operation will be more easily understood from Fig. 12. The draft exerted by the lever 54 on the rod 55, turns the lever 56 and causes a movable vise to advance up to the matrix. This vise seizes the matrix and holds it in the exact position.

The vise is shown in Fig. 3 in side elevation and in Fig. 4 in horizontal section. It comprises a metal plate 57 pivotally attached to the lever 56 and slides by a lateral plate 58 forming part of the frame 59. In the plate 57 is mounted a shaft 60 which bears at one end a small toothed wheel 61, and a ring 62, provided with inclined teeth, is fast on its other end. If the pinion 61 is rotated, the ring 62 also turns and forces a socket 64, guided in a casing 63 toward the second plate 65 of the vise. Between this plate 65 and the socket 64 is arranged a spiral spring which is compressed as soon as there is a matrix between the two plates 57 and 65, and exerts pressure on the plate 65. When there is no matrix between the plates 57 and 65, the plate 65 is pressed against the plate 57 by the spring. The shape of the right hand part of the plate 57 corresponds to the shape of a matrix in order to offer a secure support to the latter when the vise closes and during the casting of a type.

The throw of the lever 56 (Fig. 12), which moves the vise forward, is adjusted by a screw 66 which serves as a stop for the vise. in order that the matrix, suspended freely

on the distributing bars, shall not be moved too far forward by the vise. While the vise is making its forward movement, the casting mold, which is on the opposite side, is also advanced and presses against the matrix held in the vise. The mold is moved by a double lever 67 coupled by a connecting rod 55 to the lever 54 (Fig. 1).

The mold (Figs. 5 and 6) comprises two parts 68 and 69. The lower part 68 moves on the frame 58 permitting the adjustment of the width of the mold in accordance with the size of the matrix from which type is to be cast. A bolt 70 attached to the part 68 and serving to effect the closure of the mold, passes through a standard 58 and bears a ring 71 fast thereon for limiting the movement of the part 68 to the left by coming into contact with the partition 58. A lever 72 is pressed against the ring 71 by a spring 73 bearing against an adjustable ring 74. The function of this spring is analogous to that of the vise spring. When a thick matrix is clamped in the vise, the mold cannot close to the normal extent, since the degree of opening of the mold depends on the position of the two parts of the vise and on the width of the matrix which is clamped therein. The lever 72 however makes the same motion each time, the said motion having an amplitude sufficient to close the mold completely. If the mold is prevented from closing, the spring 73 is compressed and thus compensates for the excess throw of the lever 72.

The upper part 69 of the mold moves parallel to the vertical plate 58 and is guided on this plate, but it is restrained from moving in the direction of motion of the lower part 68. This upper part 69 can be actuated by the lever 67 (Fig. 12) pivotally mounted on a stud 76 (Fig. 6) fixed in the part 69 of the mold. The lower part 68 permits the matrix to pass freely. Thus it is not necessary for the lower part 68 to move forwardly. The slight play allowed between the matrix and the mold is taken up entirely when the vise presses the matrix against the mold. In the position of rest, the upper part 69 of the mold is separated from the matrix and it is only brought up to the matrix by the forward movement imparted to the vise by means of the lever 67 actuated by the rod 55 (Figs. 1 and 12). The upper part of the mold 69 has a small projection 75 which produces on the type cast a nick or recess analogous to the nick or recess in types used for hand composition. This projection maintains the cast type in the upper part 69 until it is removed automatically.

A projection 69^a (Fig. 4), on the upper part 69 of the mold extends into a corresponding recess in the vise. Fig. 4 shows the position of the mold and of the vise immediately before the clamping of the matrix. The said projection 69^a extends into the recess in the plate 57 of the vise. Beneath the casting aperture, the lower part 68 of the mold is provided with a square hole 77 into which extends a projection on the plate 65. The plate 57 can move forward and backward in the plate 58, but it cannot, however, make a lateral movement like the half 69 of the mold. It follows that these two parts always move together in the manner shown in Fig. 4. The plate 65 incloses the matrix and adjusts the lower part of the mold to a position depending on the thickness of the matrix. As soon as the vise has advanced and a matrix is in position between the two parts thereof, the plate 57 engages the upper part 69 of the mold which is then pressed against the matrix; however, in this position, the lateral plate 65 of the vise does not inclose the matrix. In the forward movement of the vise relatively to the mold, the projection of the lateral plate 65 engages in the square hole 77 of the lower part 68 of the mold, in such a manner that the matrix is pressed, at its front, against the lower part 68 of the mold. The matrix is still not firmly clamped in the vise and cannot yet be cast. The closure of the vise is effected by the small toothed wheel 61 moved by the advance of the metal pot. The latter bears a rack 78 (Figs. 1 and 13) which engages with the small toothed wheel 61 during the forward movement of the metal pot and clamps the matrix in the vise, in such a manner that no metal can escape at either side.

After the closure of the vise, it is necessary to close the mold, in order that the type cast shall have the same thickness as the matrix. The closure of the mold is effected by the lever 72 (Figs. 5 and 6) which is mounted on a shaft 79 carried by the frame 58. On this shaft 79 is keyed a lever 80 provided with a roller 81. As soon as the metal pot advances, it closes the vise by means of the rack 78 and at the same time, a projection 82, fixed on the front part of the metal pot, raises the roller 81 causing the lever 80 to turn. By this means the lever 72 also turns and closes the mold to the thickness of the matrix.

Fig. 13 shows diagrammatically the whole operation of casting. The metal pot 11 is movable on the support 12 parallel to the axis of the type cast passing through the center of the matrix, and on which the mold is also placed; the metal pot is guided by rollers 11^a rolling in guides which prevent any lateral displacement. Fig. 13 shows the metal pot brought up against the mold and the matrix which is supported in this position by the vise 57. The metal pot is reciprocated by the grooved cam 15 which turns in the direction indicated by the arrow and engages rollers carried by the metal pot.

The latter remains in the casting position until the casting operation is completed. In this position, the lever 16, controlled by the spring 17, falls into the recess 15ª in the cam 15, whereby the pump is actuated to inject liquid metal into the mold. After the casting of a type, the lever 16 is immediately raised and moved away from the mold by the continued motion of the cam 15. It remains in the separated position until another matrix is brought up for casting. The separation lasts during the revolution of the shaft 14, it being necessary to again move the upper part 69 of the mold, trim the type and aline it with the type previously cast.

Figs. 8 and 9 show the mold seen from the side against which the metal pot is applied. Fig. 8 shows the matrices suspended on the distributer, one of the matrices being exactly in front of the aperture of the mold. In Fig. 8 the mold is shown in the position which it occupies immediately before the casting operation. After the casting operation, the upper part 69 of the mold is moved by the lever 67 on the guide plate 58 in the same direction as the metal pot which in moving away carries with it the type cast. As the type cast has a pin or projection formed by the orifice or jet of the mold, it is necessary to trim it.

The trimming of the type is effected, before the separation of the two parts of the mold, by a lever 83 oscillating on an axis carried by the frame 59 (Figs. 1 and 2). The right-hand end of this lever bears a roller pressed by a spring 84ᵇ against a cam 53 which raises this roller twice every revolution, at the same time depressing the left-hand end of the lever 83. The first movement of the lever 83 lowers a slide 84 provided with a knife 84ª (Fig. 10), employed to trim the type. When the first projection of the cam 53 leaves the said roller the knife 84ª re-ascends immediately. The type is then removed from the mold and, for this purpose, the upper part 69 of the mold is moved by the lever 67 in the longitudinal direction of the type, which is left adhering to this part 69 (Fig. 10). The lever 83, actuated by the second projection of the cam 53, again depresses the slide 84 which carries a pad 88 of leather or other soft material, which strikes the type and detaches it from the upper part of the mold; the type then falls on to the table 114 of the composing stick. During the re-ascent of the slides 84, the lever 83 comes into contact with the lever 85 (Fig. 9) serving to feed the cast type into the composing stick. The lower end 85ª of this lever moves to the left taking with it a carriage 86. The first movement of the lever 85 and of the carriage 86, by the re-ascent of the slide 84 after the trimming of the type, has no effect, because the type is still in the mold; but, when the type has been removed from the upper part of the mold and has fallen on to the table 114, by the second descent of the slide 84, which afterward reascends, the carriage 86 is moved to the left (Fig. 9) and pushes the type under the pawl 87.

The type brought beneath the pawl 87 abuts against the edge of the plate 90 fixed to a frame 89 guided on a fixed guide 91 of dovetail section and which is pushed toward the right by a spring 92. This spring 92 is mounted on a rod 93 which extends through the left hand end of the bar 91 (Fig. 8). This end is bent up at right angles and takes the thrust of the spring 92. The bar 91 is fixed, at the left hand side, on a support 94 and, at the right hand end, is screwed to the guide plate 58 of the mold. Fig. 9 shows the slide 89 in the position which it assumes before the arrival of any type beneath the pawl 87. Each time that a type passes beneath the pawl 87, the slide 89 is pushed to the left, compressing its spring 92 until a line of types is completed. The pressure produced by the frame 89 on the types keeps them assembled.

When an entire line hase been cast and assembled as just described, the casting mechanism of the types is automatically thrown out of gear as follows: The bar 49 (Fig. 1), which connects the clutch-projections 39 and 43 and consequently effects the throwing into gear of the casting or distributing mechanism, is connected to the double lever 95 (Figs. 2 and 8), and is raised by the latter in the manner hereinafter described, after the casting of the last matrix in the line of matrices; it consequently leaves the pin 96 (Fig. 1) of the lever 39 and, after the revolution of the wheel 50, it throws the casting mechanism out of gear by the action of the projection 43. The cam-piece 52 of the wheel 50 (Figs. 1 and 2), as above described, supports the clutch-projection 43 on the ring 42 and, as soon as the clutch-pin or key 40 comes on to the projection 43, it is thrown out of gear and stops the wheels 41 and 50. As the bar 49 has been raised by the lever 95 and is no longer connected with the distributing mechanism, the projection 43 can no longer be raised to permit the coupling of the clutch-pin or key 40 to the ring 42; if the lever 95 however allows the bar 49 to descend again, this bar comes into engagement again with the pin 96 and, after each revolution, effects the throwing into gear of the casting mechanism in the manner above described. The descent of the assembling bar 49 takes place each time that a matrix arrives in front of the mold, and this bar remains in engagement with the unclutching projection 39 until no more matrices remain in the distributer, and the line of separate types is

complete. The bar 49 is then again raised and this movement throws out of gear the casting mechanism until the first matrix of the following line has come in front of the mold. The lowering and rising movements of the lever 95 are effected in the following manner:—The matrices are pushed, in the manner above described, on to the distributing bars 22 (Fig. 8); they are raised by the lever 24, seized by the screw-threaded rods 20 and 21 and moved to the left, in such a manner that there is a matrix in each convolution of the screw-threads on the rods. Between the screw-threaded rods 20 and 21, there is a bent lever 97 (Fig. 8), turning about a fixed axis. In the normal position, the longer arm of this lever is depressed, this is what takes place when there is no matrix in the distributer (position I Fig. 8). But, if a matrix passes from position I to position II, it turns the lever 97 at the same time raising its longer arm. This slightly raises the right-hand end 95^a of the lever 95 and consequently depresses the bar 49. In this position, the bar 49 is not connected to the clutch lever 39 (Fig. 2) so that the casting mechanism cannot be thrown into gear. The distributer continues its rotation, and the matrix passes from position II to the position III, in which it comes in front of the mold; the lever 97 is in its highest position and brings the bar 49 down to the bottom, which causes the casting mechanism to be thrown into gear and, the matrix being in front of the mold, a type is cast. On the left hand end of the lever 95 (Fig. 8), is riveted a square pin 98, which extends into a rectangular recess that is formed in the upper part of the frame 89 and is provided with a blade 99. This blade 99 is interchangeable, so that the length of the blade can be selected in accordance with the length of the line of types to be cast. As soon as the first type has been cast and has been set beneath the pawl 87, thereby pushing the frame 89 a little to the left, the pin 98 passes beneath the blade 99 and remains beneath this blade until the end of the line; thus the lever 95 and consequently, the bar 49 remain depressed; the casting mechanism therefore continues in operation until the end of the line; when a line is completed the frame 89 having been pushed right back, the mechanism is thrown out of gear by the release of the pin 98, on the end of the blade 99 coming opposite thereto; the left hand end of the lever 95 then rises with the assembling bar 49.

After the casting of the first type and its engagement beneath the pawl 87, the pin 98 passes beneath the blade 99 as above stated; the lever 97 is then no longer in contact with the end 95^a of the lever 95. The gate 97 has left the matrix which is in front of the mold and retains the following matrix occupying the position II. If there is no matrix in the position II, the lever 97 takes the position I. This is what takes place when there is a space between the matrices.

The spacers S, Fig. 14, are of the type described in the specification filed with an application for Letters Patent filed Jan. 18, 1909, Serial No. 604,245, being an improvement on the invention described in the specification of application for Letters Patent filed 24th August, 1905, under Serial No. 275,693. These spacers have the same form as the matrices and can be more or less compressed according to particular cases in the line set up or composed. A spacer S (Fig. 14) interposed between the matrices, is pushed through the plate 23 of the distributer and seized by the screw-threaded rods 20 and 21, but it does not however remain suspended on the distributing bars 22, since instead of the distributing perforations 6^a (Fig. 12) of the matrix 6, it is formed with slots 6^b (Fig. 14) such that, as soon as the spacer has passed through the plate 23, it falls into its magazine. The spacer having thus fallen, the convolutions of the threads of the screw-threaded rods 20 and 21 pushing it, remain empty; the lever 97 takes the position I. The lever 97 rests against the matrix occupying the position I, which follows the spacer. The matrix III, which is in front of the mold is cast, and then conveyed farther on. During the following rotation of the screw-threaded rods, an empty convolution comes in front of the mold, and the vise finding nothing to grasp closes completely, its lateral plates 57 and 65 fitting closely together so that no metal can be injected between these plates. In this position, the mold would close completely and would not allow the metal to pass therein; it is however, necessary to cast a corresponding space or quad. This is effected by the operation of the lever 97 in the following manner. The lever 97, when a spacer passes, occupies the position I, as hereinabove described; it then depresses a lever 100 mounted on the frame 58, to which a slider 101 is articulated. At the lower part of this slider, two steps are provided, which placed behind the ring 74 of the bolt 70 determine, to a certain degree, the amount of opening of the mold. In the position of the lever 97, which corresponds to the position I, the slide 101 is depressed in such a manner that the narrower of the said steps comes opposite the ring 74, which supports the mold. If the slider 101 retained this position, the space or quad to be cast would only have a thickness of $\frac{1}{2}$ mm. As the spacers have generally a greater thickness, it is necessary to cast spaces or quads of a thickness greater than $\frac{1}{2}$ mm. To at-

tain this result the lever 97 is carried along, by the matrix which occupied the position I, into the position II, which brings the lower step of the slide 101 opposite to the ring 74. This step being engaged between the rings 74 and the block 58ª, causes the mold to remain open to the desired extent.

The operation, if repeated each time a spacer is passed, would open the mold the same amount for each space. Now, the elastic spacers are not always contracted or compressed to the same extent. In order to compensate for the deficiency of the lines in which all the spaces or quads cast correspond to the minimum thickness of the spacers, a number of very thin spaces or quads (about ½ mm. thick), are cast and added at the end of the line until the line of types has reached its proper length. If, for example, the line of matrices has five spaces of 2 mm. each, in the line of types five spaces or quads each of 1.6 mm. are cast at these positions; the line of types is then too short by 2 mm. and must be filled up by spaces or quads of ½ mm. These thin spaces or quads, which serve for filling up the line, are cast after the last matrix and are added by hand at the sides of the other spaces or quads. There does not however always remain a gap which one can fill up with spaces or quads of ½ mm., it frequently happens that, for the end of the line, a space of 0.8 or 0.9 mm. is still necessary. The last gap which does not exceed 1 mm., but is however greater than ½ mm., is indicated by the lever 102 (Fig. 8), which bears a cam which engages beneath a projection 103 on the lever 101; the opening of the mold can thus be adjusted according to the position of the lever 102. This lever 102, which is mounted on the bracket 104, has an arm 105 which is actuated at the end of the line by means of an inclined cam-piece 106 on the slide 89 (Fig. 9). Fig. 8 shows this cam-piece 106 in chain lines when it is about to touch the arm 105. The form of this cam-piece 106 is such that it adjusts the opening of the mold in accordance with the gap at the end of the line. These supplementary spaces or quads are cast automatically at the end of the line, when there are no further matrices to cast, for the pin 98 has not left the blade 99 and thus does not yet permit the throwing out of gear of the casting mechanism. When the slide 89 has been moved sufficiently to the left for the blade 99 to allow the pin 98 to move up again, the end 95ª of the lever 95 descends again and effects the raising of the assembling bar 40 and the throwing out of gear of the casting mechanism. At this moment, the lever 97 is moved down into the position I, for there is no matrix in contact with the screw-threaded rods 20 and 21. The casting mechanism only comes into operation when the first matrix of the following line has brought the lever 97 into the position III.

Fig. 9 shows a galley in which there are already two lines of cast types. The galley consists of a bottom piece 107 provided with a movable flange 108 which can be adjusted by means of a screw 109 in accordance with the length of line desired. A cross-piece 110 supports the lines of types and is clamped in any suitable manner between the flange 108 and the wall 111 of the galley.

Fig. 11 shows the galley in section and shows moreover how the set-up line is introduced into the galley. This takes place automatically on the arrival of a fresh line of matrices in the position III (Fig. 7) of the composing frame 10. As soon as the arm B^1, B^2, or B^3 bearing the composing frame 10 arrives in the upper position III, it determines, by the aid of a pin 112 (Fig. 11) with which it is provided, the oscillation of a piece 113 mounted beneath the base 107 and provided with a tail-piece 113ª. By the abutment of the pin 112 against the end 113ª, the piece 113 takes the position indicated in chain lines and exerts pressure against the cross-piece 110 if there is no line of types yet resting against this cross-piece. If however there is already a line of types in this position, it is pushed back sufficiently to provide above it the space necessary for receiving a fresh line.

As has been already mentioned, the types are pushed one after the other beneath the pawl 87 and are clamped between the latter and the frame 89; the types then rest on the table 114 (Fig. 9). The latter, which is shown in section in Fig. 11, comprises on both sides, plates 115, which are not shown in Fig. 9. These plates 115 have passing through them two shafts 116 and 117 which project slightly on the two sides of the plates. A blade 118, fixed to the arms B^1, B^2 and B^3, passes over this shaft 117. The table 114 is fixed to the plates 115 and is retained in the position shown, by the spring 119. As soon as the blade 118 moves in the direction indicated by the arrow, its inclined plane 118ª rests on the shaft 117; the latter is depressed and retained in the second position indicated in chain lines, where it rests on a bracket 120. At the same time as the blade 118, a pin 121 fitted to the arm B, moves in the same direction and abuts against a lever 122 mounted on the shaft 116 at the moment at which the blade 118 has lowered the shaft 117 on to the bracket 120. By the descent of the shaft 117, the lever 122 has already been depressed to a certain degree, for it is rigidly fixed to the side plates 115 and to the table 114. As soon as the pin 121 meets the lever 122, it oscillates the plate 114 with the line of types A, this line of types then comes against the

lines of type which are already in the galley. The blade 118 and the pins 121 and 112 are fitted to the arm B, in such a manner that, before the latter has reached its position of rest in front of the distributer, they have already left the levers and the shafts which they have actuated in such a manner that the table 114, drawn downward by the spring 119, resumes its first position and is ready to receive a fresh line. In order that, at the moment of the removal of the type cast from the upper part 69 of the mold (Fig. 10), the type shall not be able to fall to one side, there is arranged beneath the mold a lateral plate 123 which is not secured to the table 114, in order to permit the latter to oscillate with the line of types which it carries.

The arrangement forming the subject of my invention may be easily fitted to any machine for casting lines of type, which distributes its matrices into its magazine by means of a distributer.

This arrangement illustrates the simplicity of a machine for casting separate types constructed according to the present invention.

The arrangements above described are only given by way of example; the forms, dimensions and detail arrangements can be varied in all cases without departing from the nature of the invention.

Claims:

1. In a machine for setting up and casting types, the combination of a mechanism for setting up matrices, mechanism for casting linotypes therefrom, mechanism for distributing said matrices, and a mechanism for casting separate types from said matrices as they are being distributed.

2. In a machine for setting up and casting types, the combination of a distributing mechanism, a casting mechanism, two controlling wheels one for each of said mechanisms, clutch pins or keys corresponding to each mechanism and a connecting bar alternately actuated at each clutching motion.

3. In a machine for setting up and casting types, the combination of a distributing mechanism, a casting mechanism, two controlling wheels one for each of said mechanisms, clutch-pins or keys corresponding to each mechanism, two oscillating levers bearing the clutch pins or keys and a connecting bar connected to these two levers.

4. In a machine for setting up and casting type, the combination with a composing frame for the matrices, a mechanism for setting up matrices in lines, a mechanism for casting a type bar therefrom, a mechanism for separating from each other the matrices issuing from the composing frame, and a mechanism for casting types from the matrices.

5. In a machine for setting up and casting type, the combination of a mechanism for setting up matrices in lines, a mechanism for casting a type bar therefrom, distributing bars 22 for receiving the matrices after the type bar has been cast, a plate 23 provided with an aperture forming an entrance for the matrices, a bent lever 24 closing partially this entrance, a cam 28 for operating said lever, screw-threaded rods for carrying the matrices on the distributing bars, a mechanism for casting separate types from said matrices.

6. In a machine for setting up and casting types, a mechanism for setting up matrices in lines, a mechanism for casting a type bar therefrom, a mechanism for distributing the matrices, a mechanism for casting separate types from said matrices, a driving shaft 34 for the distributing mechanism, a shaft 35 driving the mechanism for casting separate types, means for putting in gear and stopping alternately the shaft 34 and the shaft 35 and consequently the distributing mechanism and the casting mechanism.

7. In a machine for setting up and casting type, the combination of a mechanism for setting up matrices in lines, a mechanism for casting a type bar therefrom, a mechanism for distributing the matrices, a mechanism for casting separate types from the matrices, a shaft 34 controlling the distributing mechanism, a toothed wheel 36 loosely mounted on this shaft, a sliding key 37 integral with the toothed wheel, a ring 38 keyed on the shaft 34, a clutching projection 39 for the key, and a rocking lever carrying the projection.

8. In a machine for setting up and casting type, the combination of a mechanism for setting up matrices in lines, a mechanism for casting a type bar therefrom, a mechanism for distributing the matrices, a mechanism for casting separate types from said matrices, a shaft 35 controlling the casting mechanism, a toothed wheel loosely mounted on the shaft, a sliding key integral with the toothed wheel, a ring keyed on said shaft, a clutching projection for the key, a rocking lever carrying the projection.

9. In a machine for setting up and casting types, a mechanism for setting up matrices in lines, a mechanism for casting a type bar therefrom, a mechanism for distributing the matrices, a mechanism for casting separate types from said matrices, a driving shaft 34 controlling the distributing mechanism, a driving shaft 35 controlling the casting mechanism, toothed wheels loosely mounted on these shafts, keys by means of which these toothed wheels can be made integral with the shafts, clutching projections for these keys, rocking levers carrying the projection, a connecting rod between these levers, cams carried by the shafts of the dis-

tributing and casting mechanisms and adapted to operate upon the rocking levers.

10. In a machine for setting up and casting types, the combination of a mechanism for setting up matrices, mechanism for casting a linotype therefrom, mechanism for distributing the matrices, said mechanism comprising a vise in two parts for seizing the matrices, a shaft 60 passing through these two parts, a pinion 61 on this shaft, a ring 62 provided with inclines, a pressure spring, a mold for the separate type, and a mechanism for casting separate type.

11. In a machine for setting up and casting types, the combination of a mechanism for setting up matrices, mechanism for casting a linotype therefrom, mechanism for distributing the matrices, said mechanism comprising a vise in two parts for seizing the matrices, a mold, a lever 56 for bringing the vise toward the mold, a cam 53 carried by the shaft 14 controlling the operation of the lever 56, a fixed rack 78, and a pinion 61 carried by the vise so as to determine the clamping thereof.

12. In a machine for setting up and casting types, the combination of a mechanism for setting up matrices, mechanism for casting a linotype therefrom, mechanism for distributing the matrices, said mechanism comprising a vise which immobilizes each matrix for casting a separate type, a mold in two parts which can be adjustably separated from one another, a hinged lever 72 closing the mold, a spring 73 compensating the differences of thickness of the matrices, and a melting pot.

13. In a machine for setting up and casting types, the combination of a mechanism for setting up matrices in lines, of a mechanism for casting in lines, a mechanism for distributing said matrices, means for immobilizing a matrix, means for casting a separate type, a knife for trimming this separate type and a cam provided with two projections for actuating the knife.

14. In a machine for setting up and casting type, the combination of a mechanism for setting up matrices in lines, a mechanis for casting a type bar therefrom, a mechanism for distributing matrices, a mechanism for casting one at a time separate types from said matrices, a mechanism adapted to throw out of gear the mechanism for casting separate types when a line of composition in lines is terminated.

15. In a machine for setting up and casting types, a mechanism for setting up matrices in lines, a mechanism for casting a type bar therefrom, a mechanism for distributing matrices, a mechanism for casting one at a time separate types, a table 114 on which rest the separate types, a slide 84 pushed by the types, a movable frame 89 integral with the said slide, a rocking lever 95 to which is connected the bar 49 connecting the distributing mechanism and the mechanism for casting separate types, a bent lever 97 in relation with the lever 95 and pushed by the matrices.

16. In a machine for setting up and casting types, a mechanism for setting up matrices in lines, a mechanism for casting a type bar therefrom, a mechanism for distributing matrices, a mechanism for casting one at a time separate types, a table 114 on which rest the separate types, a slide 84 pushed by the types, a movable frame 89 integral with the said slide, a rocking lever 95 to which is connected the bar 49 connecting the distributing mechanism and the mechanism for casting separate types, a bent lever 97 in relation with the lever 95 and pushed by the matrices, a pin 98 carried by the lever 95 and a slot in the frame 89.

17. In a machine for setting up and casting types, the combination of a mechanism for setting up matrices, mechanism for casting a linotype therefrom, mechanism for distributing the matrices, said mechanism comprising a vise, a mold in two parts, a spring tending to bring nearer together the two parts, a slide 101 controlling the opening of the mold, steps of unequal heights carried by this slide, a lever 100 controlling said slide and in relation with the bent lever 97 and a melting pot.

18. In a machine for setting up and casting types, the combination of a mechanism for setting up matrices, mechanism for casting a linotype therefrom, mechanism for distributing the matrices, said mechanism comprising a vise, a mold in two parts, a spring tending to draw nearer together the two parts, a slide 101 controlling the opening of the mold, a projection 103 on the slide 101, a pivoted lever 105 and an inclined cam-piece 106 carried by the movable frame 89.

19. In a machine for setting up and casting type, the combination of a mechanism for setting up matrices in lines, a mechanism for casting a type bar therefrom, a mechanism for distributing matrices, a mechanism for casting one at a time separate types from said matrices, and a galley adapted to receive the separate types.

20. In a machine for setting up and casting type, the combination of a mechanism for setting up matrices in lines, a mechanism for casting a type bar therefrom, a mechanism for distributing matrices, a mechanism for casting one at a time separate types from said matrices, a galley adapted to receive the separate types, a table receiving the types, a device for oscillating the table, and a device for maintaining the types in the galley.

21. In a type casting machine, type matrices adapted to be assembled side by side for use, each matrix having a character in one edge, and having such edge of a width setwise corresponding to the thickness of the type to be produced therefrom, together with means for assembling the said matrices in proper order, in combination with a variable mold adapted to coöperate with the individual matrices and controlled in width setwise by the setwise thickness of the matrices, and means for presenting said assembled matrices successively to the mold.

The foregoing specification of my "improved apparatus for setting and casting separate types on linotype machines" signed by me this 29th day of December 1908.

FRANZ SCHIMMEL.

Witnesses:
DEAN M. MASON,
MAURICE Y. PIGUET.

Copies of this patent may be obtained for five cents each, by addressing the "Commissioner of Patents, Washington, D. C."