United States Patent

Domenico

[15] **3,656,078**

[45] **Apr. 11, 1972**

[54] TEMPERATURE RESPONSIVE CIRCUIT CONTROL INSTRUMENT

[72] Inventor: **Italo Di Domenico**, Pittsford, N.Y.

[73] Assignee: **Qualitrol Corporation**, Fairport, N.Y.

[22] Filed: **Nov. 3, 1970**

[21] Appl. No.: **86,404**

[52] **U.S. Cl.** **337/70**, 337/42, 337/87, 337/310, 337/322

[51] **Int. Cl.** **H01h 71/16**

[58] **Field of Search** 337/42, 70, 87, 305, 310, 311, 337/322, 323

[56] **References Cited**

UNITED STATES PATENTS

3,451,026	6/1969	Sivi et al.	337/322
3,304,395	2/1967	Slonneger	337/311
2,764,649	9/1956	Lehde	337/44
2,846,546	8/1958	De Fouw	337/322
3,276,260	10/1966	Weiler	337/310

Primary Examiner—J. V. Truhe
Assistant Examiner—Hugh D. Jaeger
Attorney—Stephen J. Rudy

[57] **ABSTRACT**

An electrical circuit control instrument having a control shaft operable by a thermal element responsive to temperature changes in an external medium. Arranged along one side of the interior of the casing is a bank of switches each of which has a fixed position and is connected in a separate control circuit. A cam individual to each switch and carried by the shaft is cooperable with tripping mechanism to trip its switch. Each cam is initially adjustable angularly on the shaft to determine its precise moment of cooperation with the tripping mechanism. Subsequent adjustments as to the moment of cam and tripping mechanism cooperation are made by a manipulative lever carrying the tripping mechanism so as to vary the position of the latter relative to its cam. Each lever is curved so as to curve over its related switch without interference when being swung fully in one direction.

In a modified form, a manually releasable clutch is connected in the control shaft which, when released, permits turning of the control shaft and cams independently of the thermal element so as to obtain a test operation of the tripping mechanism.

9 Claims, 7 Drawing Figures

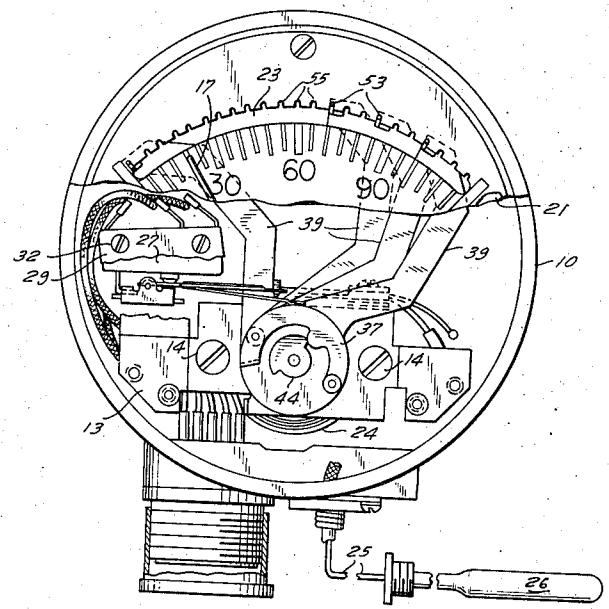

PATENTED APR 11 1972

3,656,078

SHEET 1 OF 2

FIG. 1

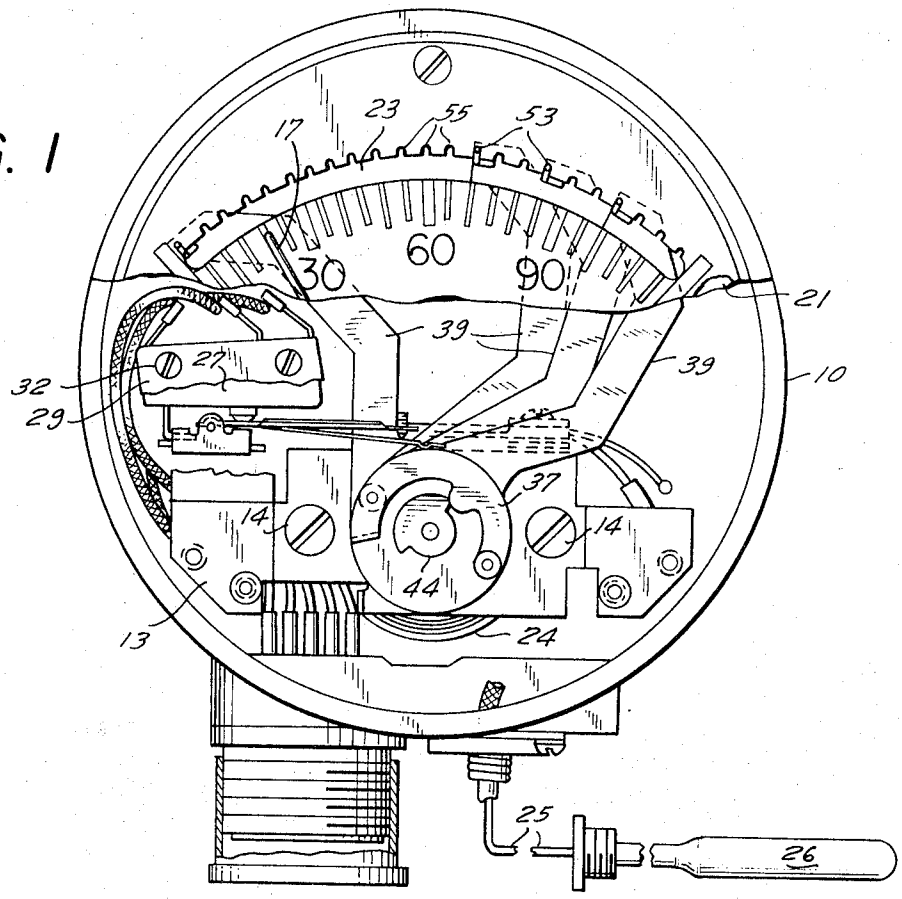

FIG. 2

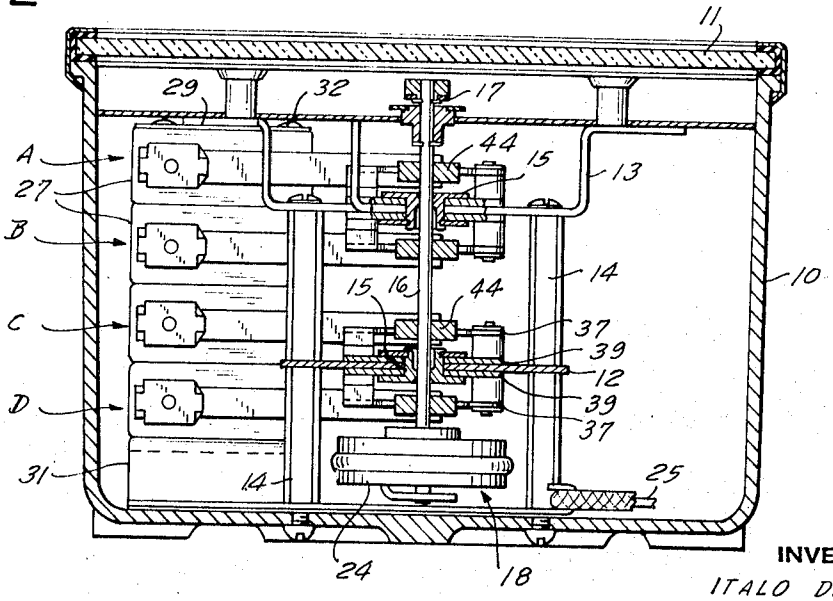

INVENTOR
ITALO DI DOMENICO
BY
Stephen J. Rudy
ATTORNEY

PATENTED APR 11 1972

3,656,078

SHEET 2 OF 2

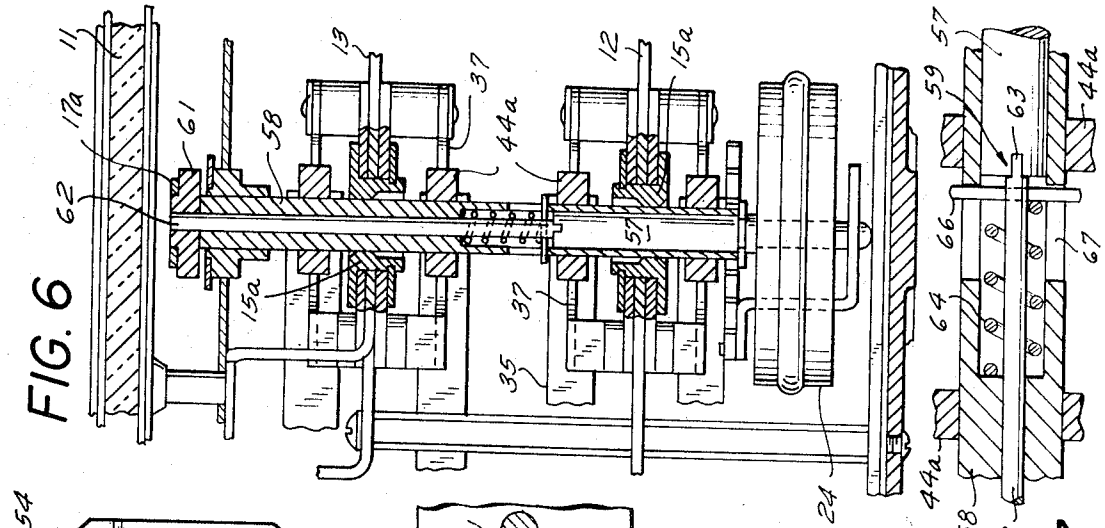

FIG. 6

FIG. 7

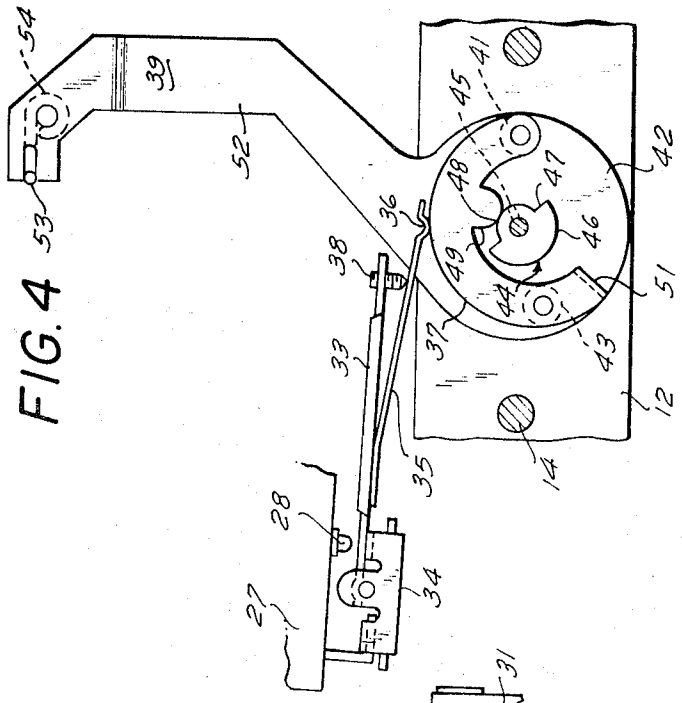

FIG. 4

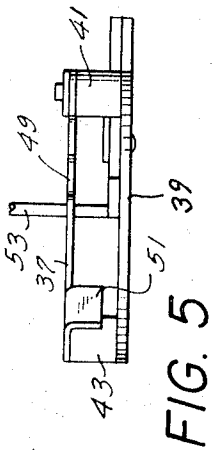

FIG. 5

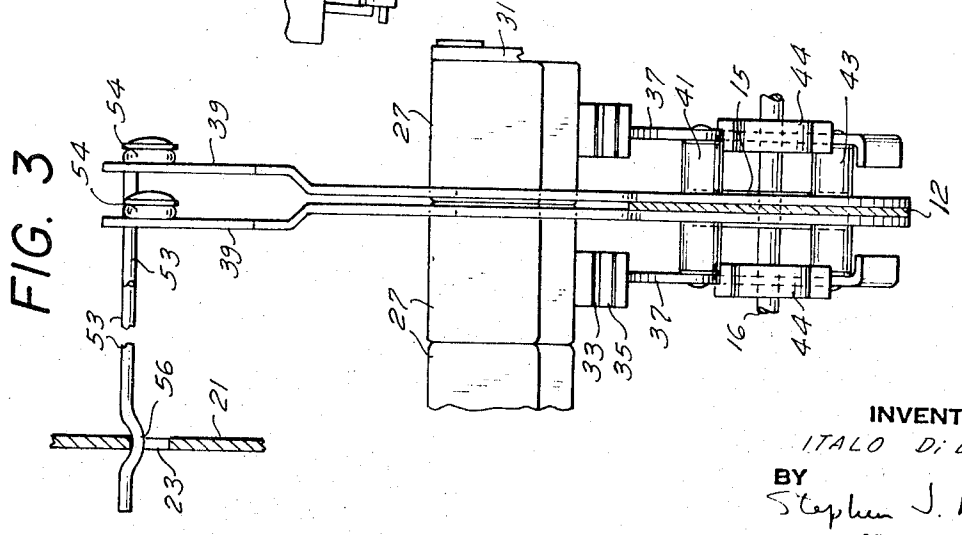

FIG. 3

INVENTOR
ITALO Di DOMENICO
BY
Stephen J. Rudy
ATTORNEY

TEMPERATURE RESPONSIVE CIRCUIT CONTROL INSTRUMENT

BACKGROUND OF THE INVENTION

This invention relates to the art of temperature responsive circuit control instruments of a type employed in monitoring the operation of a remotely located apparatus in accordance with temperature changes developing in the latter.

Instruments of this nature have one or more electrical switches are cam operable as a consequence of the turning of a cam shaft in response to temperature changes in the apparatus being monitored. Setting mechanism is provided for predetermining the temperature at which each switch will be caused to operate. Devices of this general nature are known from U.S. Pat. Nos. 3,276,260 and 3,451,026. These have switch operating setting mechanisms in which it is required to move the position of the switches when setting the latter. Further, each of the switches is mounted to a face of a setting lever in an arrangement that requires an undesirable enlargement of the housing to accommodate a plurality of the switches.

The general objective of the present invention is to provide an improved instrument of this type.

A feature of the invention lies in the nature of the switch operating mechanism which is such that the several switches of the device remain stationary at all times, and it is only required to adjust the position of a lever in setting the operation of a related switch.

Another feature of the invention is the arrangement of the switches in a stationary bank along one side of the interior of the housing, and related switch setting levers having a hooked form. This arrangement enables the levers to pivot in a wide arc clear of the switches, and results in an instrument having a large switch capacity in a relatively small size housing.

BRIEF DESCRIPTION OF THE DRAWING

In the accompanying drawing:

FIG. 1 is a front end view with portions broken away for clarity of a temperature responsive circuit control instrument embodying the invention;

FIG. 2 is a sectional view of FIG. 1, viewed from the bottom, with portions broken away;

FIG. 3 is an enlarged detail illustrating in side elevation the compact mounting arrangement of a pair of the circuit control units in association with the control shaft;

FIG. 4 is an enlarged detail illustrating one of the circuit control units and the relative association of its components;

FIG. 5 is an enlarged detail, viewed from the bottom, of a control lever and its trip lever;

FIG. 6 is a fragmentary view similar to FIG. 2 but illustrating the pointer control shaft as being provided with a manually releasable clutch; and

FIG. 7 is an enlarged detail of the clutch mechanism.

DESCRIPTION OF A PREFERRED EMBODIMENT

Reference is now directed to FIGS. 1–5 of the accompanying drawing wherein the temperature responsive circuit control instrument illustrating the invention includes a casing 10 having an open front end closed by a removable bezel glass 11. Within the casing a pair of transversely extending support plates 12 and 13 are held rigidly with the casing and in spaced relation to each other by means of a pair of studs 14. Fixed rigidly with the plates are bushings 15 in which a pointer or control shaft 16 is supported for relative rotation. The shaft carries at its forward end a radially extending pointer 17. A conventional temperature sensing mechanism, generally indicated at 18, is connected to the rear end of the shaft so as to cause in conventional manner turning of the shaft in accordance with temperature changes developing in the particular apparatus with which the sensing mechanism may then be associated.

As the shaft is turned, the pointer is carried with it in an arcuate path relative to a graduated temperature indicating

scale marked upon the face of a dial plate 21 to indicate the temperature sensed. The dial plate is maintained rigidly with the casing by means of suitable fasteners. The degree markings of the scale extend from the lower edge of an arcuate slot 23 in the dial plate. The slot is concentric with the axis of rotation of the shaft; and the scale markings are radial to such axis. The scale is visible through the bezel glass 11. The bezel glass may be readily removed in conventional manner so as to allow access to the interior of the casing.

The temperature sensing mechanism 18 is of a conventional Bourdon tube type. It includes a coiled Bourdon tube 24 connected at one end to the shaft and connected at its other end by means of an insulated capillary tube 25 to an externally located thermometer bulb 26. The bulb is designed for insertion in apparatus, the operation of which is intended to be monitored by the control instrument. The capillary tube 25 is of sufficient length to permit the bulb to be associated with apparatus located remotely from the control instrument. The apparatus to be monitored may be a boiler, a fluid cooled transformer, or other device, the proper operation of which is dependent upon its temperature remaining within a specific range. Fluid pressure developing within the thermometer bulb as a consequence of a temperature change occurring in the associated apparatus acts in conventional manner through the Bourdon tube to cause turning of the control shaft upon its axis.

Electrical circuit control units, generally indicated as A, B, C and D arranged within the casing, are operatively associated with the control shaft in such manner that, as the shaft turns in response to certain temperature changes sensed by the thermometer bulb, one or the other of the control units may be actuated to cause operation of an externally located electrical regulator with which it is connected The regulator may be an alarm signal, a control valve, or other suitable instrument for obtaining a desired operation or control of the apparatus being monitored.

The several control units are of similar structure. The one sown in FIG. 4 being representative thereof. Each includes an individual conventional switch 27 having a spring biased push pin 28 which, when depressed, closes an electrical circuit to a specific type of externally located regulator (not shown). The several switches are arranged compactly in side-by-side relation along one side of the interior of the casing in general parallel spaced relation to the pointer shaft, as appears in FIG. 2. The switches are clamped in a stationary condition between a pair of fixed end brackets 29 and 31 by means of a pair of bolts 32 extending through the housings of the several switches. Bracket 29 is an upper extension of the support plate 13; bracket 31 is mounted fast to studs 14.

Each switch 27 includes a switch pin actuating element comprising a rigid trip blade 33 hinged at its rear to a support 34 mounted to the switch housing. The trip blade extends away from the support transversely of the casing 10 in underlying relation to the switch pin 28. Welded at its rear to the underside of the blade is a leaf spring or strip 35, the forward end of which extends beyond the corresponding end of the trip blade and is formed with a transversely extending offset or under rib 36. The rib overlies, and is constantly held pressed upon, the periphery of a separate curved or segmental trip lever 37. A screw 38 is adjustably threadable through the trip blade against the underlying leaf strip to cause flexing or spreading of the latter from the trip blade to obtain a desired spreading of the one to the other for engagement of the leaf spring with the rip lever.

Each trip lever is carried upon a lower outer face of a separate upwardly disposed switch setting control lever 39. The trip lever 37 is a flat plate segment extending for a little more than half of a circle. It is pivoted at one end upon a hub 41 which is fixed to an outer face of a circular lower portion 42 of the control lever. The control lever 39 is of a plate form, and is pivoted axially of its circular portion upon a bushing 15 in coaxial relation to the control shaft. Diametrically opposite the hub 41 is a second hub 43 of equal axial extent fixed to the

outer face of the control lever. The end face of this second hub provides a bearing surface over which the inner face of the trip lever slides as the trip lever is pivoted. The second hub further serves to maintain the trip lever in a desired spaced parallel relation to the outer face of the control lever.

A separate disc cam **44** is associated with each control unit as best indicated in FIGS. 2–4. The cam is fixed upon the control shaft by means of a lock screw **45** which may be loosened to permit angular adjustment of the cam relative to the shaft. The cam has a cam riser **46** stepped by means of end shoulders **47** radially outward from an inner peripheral surface **48** of reduced diameter. The cam surfaces **46** and **48** are concentric to the axis of the control shaft. The trip lever **37** has a lobe **49** on its inside radius which overlies the periphery of the cam. The trip lever is constantly biased downwardly about its pivot under the load of an inturned flange **51** at its free end so as to hold its lobe in riding contact with the periphery of the cam.

During operation of the device, when an end shoulder **47** of the cam riser **46** engages the lobe **49**, the trip lever **37** will be pivoted clockwise (FIG. 1) as its lobe is forced onto the cam riser **46**. This clockwise pivoting will swing the trip blade **33** upwardly to depress the switch pin **28** to closed condition, as appears in FIG. 1. When the control shaft **16** is next turned sufficiently to cause the lobe **49** to ride beyond an end shoulder **47** of the cam riser, the trip lever will pivot downwardly to bring its lobe onto the reduced cam periphery **48** and, as a consequence, the trip blade will also swing downwardly away from the switch pin **28** to release the switch to an electrically open condition, as appears in FIG. 4. The switch will remain closed during the time the lobe **49** of the trip lever rides the cam riser **46**; and will remain open during the time it rides the reduced cam periphery **48**.

Each control lever **39** has an upwardly extending arm portion **52** which is selectively manipulative in a clockwise or counterclockwise direction so as to pivot the control lever about the control shaft and thereby carry its trip lever in a corresponding direction relative to the underlying related cam **44**. In this manner, the position of a trip lever's lobe **49** relative to an end shoulder of a cam may be adjusted and, as a consequence, the temperature at which the related switch **27** will be actuated may be selectively adjusted or set.

Each control lever **29** is provided with a stiff wire detent finger **53** which may be readily manipulated by the operator at the open front end of the instrument to adjustably pivot the control lever and thereby change the temperature setting at which the related switch will be operated.

The finger **53** is riveted at one end **54** to its control lever **39** and extends forwardly therefrom through the arcuate slot **23** in the dial plate at right angles to the latter and to the control lever. The projecting end of the finger is manipulative by the operator along the slot **23** to pivot the control lever about its bushing **15** to a selected clockwise or counterclockwise position. The scale degree marking with which the finger is registered will indicate the temperature at which the switch of the related control unit will be operated.

Means is provided to releasably latch the finger in its adjusted position relative to the dial plate. This includes a succession of notches **55** in the upper edge of the arcuate slot of the dial plate, each of which registers with one of the scale markings. The resilient finger is normally biased upwardly so as to seat an underbend **56** thereon in one of the notches. While the finger is engaged in a notch, it is restrained from being disengaged therefrom by shock or other vibrations to which the control instrument may be subjected To release the finger from its latched condition and move it to a new setting, it is only necessary for the operator to depress the projecting end of the finger sufficiently to withdraw it from the notch and while holding it thus released move the finger along the slot to the desired new setting. When the finger is released, it will spring upwardly into the then registering notch to lock the finger and the control lever securely in the new setting.

It is understood that since there are several fingers **53** projecting through the dial plate slot, one for each of the control units A, B, C and D, each finger will be limited by the settings of neighboring fingers as to the range of scale markings to which it may be moved and as to the corresponding notches in which it may be engaged.

When the control shaft **16** has been turned as a consequence of a change in the temperature of the apparatus being monitored, to carry the pointer over the dial face to a scale marking with which a finger is registered, the cam **44** of the related control unit A, B, C or D, as the case may be, will have been carried angularly sufficiently to cause operation of the related switch. Operation of the switch will then establish a circuit to a suitable regulator (not shown) serving the apparatus being monitored. And it is apparent as this action occurs in turn with respect to each of the control units, the various associated regulatory devices will be operated.

The instrument is initially tested and adjusted for proper operation at the factory. In doing this, the lock screw **45** of the cam of each control unit is loosened to allow free turning of the cam relative to the control shaft. The thermometer bulb **26** is then inserted in an apparatus, the temperature of which allows the dial pointer to move to a corresponding temperature marking on the dial plate. The finger **53** of a selected one of the control units is then moved to a notch registering with this setting on the dial plate. This functions to swing the related control lever to carry its trip lever **37** to a corresponding angular position relative to the control shaft. The related cam is then precisely angularly adjusted to the point of engagement of one of its shoulders **47** with the lobe **49** of the trip lever at which the related switch is caused to function and operate the related regulating device. The set screw of the cam is then tightened to lock the cam in this adjusted position. The cam of each of the other control units is similarly adjusted except that the test temperature to which each of control unit is adjusted will be within the range of its intended operation. No further adjustments are required with respect to the cams. Once these are adjusted, it is only necessary to move each finger **53** of the control units to a selected temperature setting at which it is desired that the related regulating device will function.

It is to be noted that the bank of switches **27** are stationary; and that it is only necessary to pivot the control lever **39** of any selected switch by means of its finger **53** to obtain a selected operating setting of the switch.

It is to be also noted that the upraised arm portion **52** of each control lever is of a general arcuate configuration. This construction enables the switches to be mounted in a bank in a compact arrangement along one side of the interior of the housing: and it enables the control levers to pivot widely in the housing clear of the switch housings. When the control levers are pivoted toward the bank of switches, their curved upper portions will overhang r curve over the switches with clearance as indicated by the control lever at the extreme left in FIG. 1.

It is also to be noted that there are but two of the bushings **15**, one located in each of the support plates **12**, **13**; and that the control levers are so arranged that two of them are pivotable on each bushings, one to one side of the related support plate and the other at the opposite side as best appears in FIGS. 2 and 3. This feature, together with the baked arrangement of the switches, and the fact that the switches remain at all times stationary, permits a relatively small casing to be utilized having a four switch service capacity.

At times, it is desired that the instrument be test operated in the field to determine whether its switches are functioning. Where there are several switches in an instrument as here, testing would normally require successive manipulation of each of the control levers. A procedure of this nature would be time consuming.

To simplify testing of the instrument, the pointer control shaft has been modified, as indicated in FIGS. 6 and 7, to comprise separate inner and outer sections **57** and **58** normally connected to turn as a unit by means of a manually releasable clutch **59**. The inner shaft **57** is connected to the Bourdon tube element **24** so as to turn in conventional manner in

response to operation of the latter. It is slidably received in an enlarged bore axially at the rear of the outer shaft. The outer shaft **58** carries the several cams **44***a* of the switch units, and is supported in the bushings **15***a* for rotation relative to the latter and relative to the inner shaft **57** when the clutch **59** is released.

The clutch includes a clutch rod **62** slidably received in a reduced bore of the outer shaft. The hub **61** of the dial pointer is fixed to a forwardly projecting end of the rod. The rear of the rod has a flat or key **63** normally engaged under the load of a spring **64** in a complementary end slot of the inner shaft. The spring abuts a cross pin **66** fixed in a hole in the rod. The cross pin slidably projects at its ends through opposed axially elongated slots **67** in the outer shaft.

In the engaged or normal condition of the clutch, the inner and outer shafts, together with the clutch rod and pointer, turn as a unit in response to operation of the thermal unit **24**. But, when the clutch is disengaged, the outer shaft **58** is rotatable free of, and relative to, the inner shaft **57** so as to carry the several cams **44***a* with it relative to the trip levers **37**.

If it is desired to test the operation of the several switches, it is only necessary to pull outwardly on the pointer hub **61** sufficiently to draw out the clutch rod **62** so as to disengage its key end **63** from the inner shaft **57** to free the outer shaft from the inner shaft. Manual rotation of the pointer hub **61** will then carry the pointer **17***a* to the various dial settings. This rotation will be transmitted through the clutch rod and the cross pin to the outer shaft **58** so as to carry the cams sufficiently to trip their related switches. If it is found that a tripped switch does not function, or that it is not tripped at precisely the moment the pointer reaches the related dial setting, the switch may be replaced or the related cam may be angularly adjusted as needed. Upon manually releasing the pointer hub, the clutch rod will be restored by its spring **64** to normal condition as its key end is re-engaged with the complementary slot of the inner shaft.

What is claimed is:

1. A temperature responsive circuit control instrument comprising a rotatively turnable control shaft, means responsive to temperature changes for turning the shaft, a dial plate having a graduated scale marked upon its face the markings of which are radial to the axis of the shaft, a pointer fixed to the shaft for movement by the shaft in an arcuate path relative to the markings, a circuit control switch, a switch actuating cam fixed to the shaft, and adjustable means operatively associating the cam with the switch for causing the cam to actuate the switch at a predetermined time in its angular movement; wherein the switch is at all times stationary; and wherein the adjustable means comprises: a control plate lever mounted coaxially upon the shaft for relative angular movement carrying a curved lever, the curved lever being pivoted at one of its ends upon a face of the control plate lever and being formed with a lobe that depends in the path of angular movement of the cam, the cam in its angular movement with the shaft being cooperable with the lobe to swing the curved lever about its pivot, the switch having an extended trip arm lying tangentially upon the periphery of the curved lever, and the curved lever being adapted when pivoted by the cam to move the trip arm to actuate the switch, a manually operable detent finger extending from the control plate lever for effecting selective angular adjustment of the control plate lever relative to the shaft and as a consequence effecting a corresponding angular adjustment of the curved lever and its lobe relative to the cam, and notch means registering with each scale marking for receiving the detent finger so as to lock it and the control plate lever in their adjusted position.

2. A temperature responsive circuit control instrument as in claim **1**, wherein the curved lever is supported upon its pivot in parallel spaced relation to the said face of the control plate lever.

3. A temperature responsive circuit control instrument as in claim **1**, wherein the trip arm comprises an upper rigid blade, a resilient second blade fixed at one end to the underside of the rigid blade and having an outer end resting upon the periphery of the curved lever, and adjustable means for spreading and maintaining the second blade relative to the rigid blade in pressed relation to the periphery of the curved lever.

4. A temperature responsive circuit as in claim **3**, wherein the curved lever is weighted at a free end thereof so as to be constantly overbalanced about its pivot in the direction of the cam.

5. A temperature responsive circuit control instrument as in claim **1**, including a fixed housing for the switch arranged in substantially parallel spaced relation to the shaft, wherein the control plate lever has an upper curved arm having an inside radiused edge movable in overhanging relation to the switch housing upon pivoting of the control plate lever in the direction of the switch housing.

6. A temperature responsive circuit control instrument as in claim **5**, wherein there is a bank of said switch housings having a fixed position in substantially parallel spaced relation to the shaft, a separate cam is carried by the shaft individual to each switch, and a separate control plate lever is similarly associated with each cam and with each switch.

7. A temperature responsive circuit control instrument comprising a control switch, a control shaft unit, a dial pointer carried by the unit, camming means mounted upon the unit for tripping the switch upon the unit being rotated a predetermined angular distance, and temperature responsive means for causing rotation of the unit; characterized in that the unit comprises a first shaft member having an axial recess in its rear end, a second shaft member slidably received in the recess having rotation relative to the first shaft member, the camming means being mounted upon the first shaft member, the temperature responsive means being connected to the second shaft member, a rod slidably received in an axial bore in the first shaft member, the rod having a forwardly projecting end upon which the dial pointer is fixed and having a key at its rear end releasably received in an end slot of the second shaft member, a cross pin in the rod engaged in longitudinally extending slots of the first shaft member, and a spring normally biasing the rod toward the second shaft member maintaining the key of the rod engaged in the end slot of the second shaft member, the rod being manipulatively slidable against the bias of the spring to displace the key from the end slot.

8. A temperature responsive circuit control instrument comprising a housing supporting a control shaft carrying a cam, a thermal element connected to the shaft having response to temperature changes so as to turn the shaft on its axis, and a circuit control switch rigidly supported to the housing having a projecting switch trip arm, characterized by a manipulative control lever pivoted upon the control shaft for relative angular adjustment having a face upon which an arcuate trip lever is eccentrically pivoted, the arcuate trip lever carrying a lobe depending in the path of angular movement of the cam and having an outer curved surface upon which the switch trip arm rests, the cam being adapted to have cooperation with the lobe as the shaft is angularly turned so as to cause relative radial movement of the trip lever and consequent actuation of the switch trip arm, and the manipulative control lever being adapted when angularly adjusted relative to the shaft to vary the cooperating position of the lobe relative to the cam.

9. A temperature responsive circuit control instrument as in claim **8**, characterized in that the manipulative control lever has an inside curvature in its upper edge which is adapted to overlie the switch upon angular turning of the manipulative lever in the direction of the switch.

* * * * *