July 23, 1935. A. C. BROWN 2,008,896

MACHINE FOR FILLING BAGS

Filed May 19, 1933 2 Sheets-Sheet 1

Fig. 1.

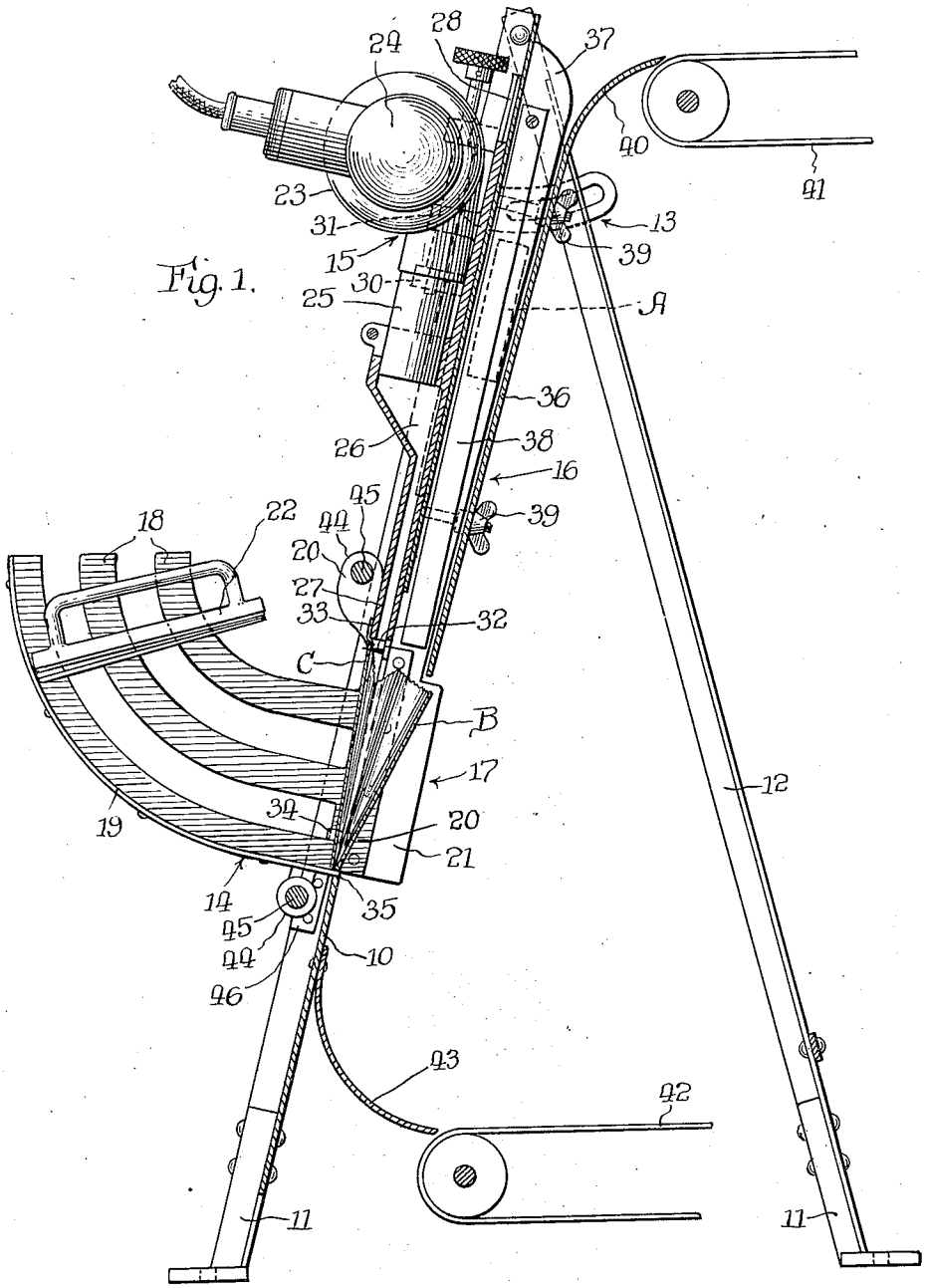

Inventor:
Albert C. Brown,
By Chisholm, Parker & Carlson
Attys.

July 23, 1935. A. C. BROWN 2,008,896

MACHINE FOR FILLING BAGS

Filed May 19, 1933 2 Sheets-Sheet 2

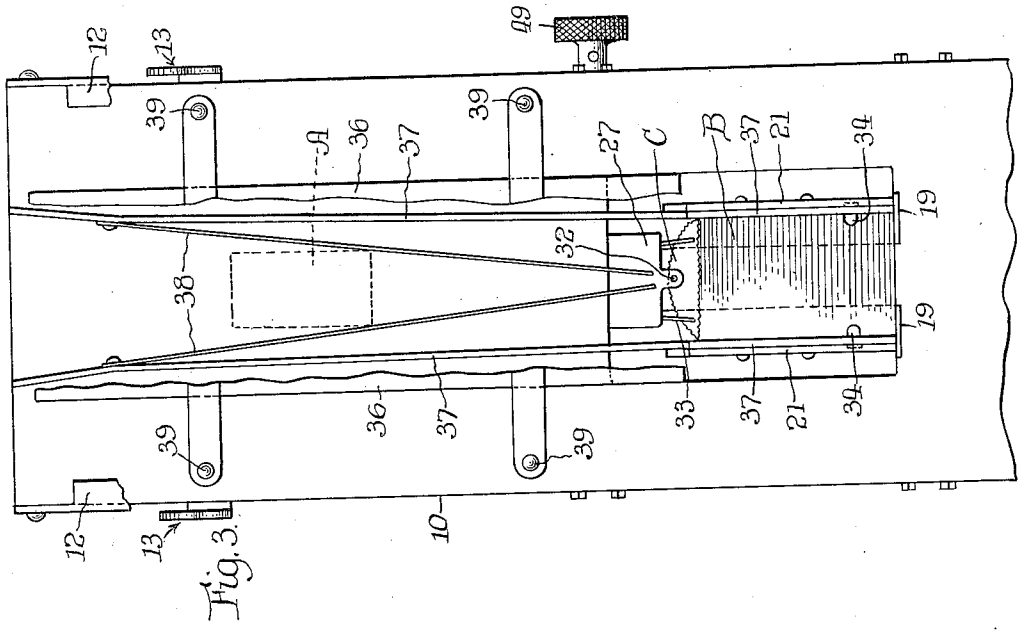

Fig. 3.

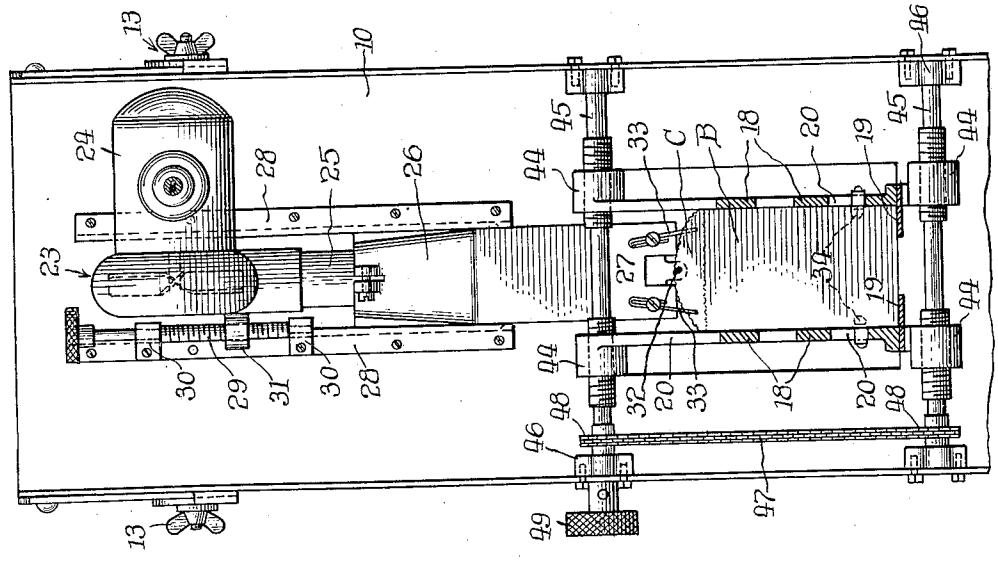

Fig. 2.

Inventor:
Albert C. Brown,
By Chisholm, Parker & Carlson
Attys.

Patented July 23, 1935

2,008,896

UNITED STATES PATENT OFFICE

2,008,896

MACHINE FOR FILLING BAGS

Albert C. Brown, Chicago, Ill.

Application May 19, 1933, Serial No. 671,783

2 Claims. (Cl. 226—49)

The invention relates to machines for introducing articles of merchandise into individual bags or the like and the general aim of the invention is to provide a machine of this character which is simple in construction, and performs, with exceeding efficiency, the operation of rapidly inserting a succession of articles into individual bags.

An object is to provide a new and improved machine in which a succession of articles are delivered to bags which have been opened to receive said articles by an air blast.

Another object is to provide such a machine in which the articles move by gravity down an inclined plane into open bags which are supplied from a magazine located above said plane.

In conjunction with the foregoing, another object is to provide means for delivering the articles to the bags in which the articles are guided to move by their own momentum into the bags, the bags being so presented that the momentum of the articles displaces the bags from their presented position and the enclosed or packaged articles are free to fall to a disposal point or removing conveyer.

More specifically stated, an object resides in the provision of a bag filling machine embodying a bed or support disposed at an angle to the horizontal and having a bag presenting magazine carried upon the upper side of said bed where access thereto is convenient, and article guide means mounted on the lower side of the bed for directing gravity impelled articles into the bags.

Other objects are to provide novel guide means for directing movement of the articles, new and improved means for presenting the bags, and simple means for adjusting the several parts of the machine.

Other objects and advantages will become apparent in the following description and from the accompanying drawings, in which:

Figure 1 is a side elevation, partially in vertical section, of a machine embodying the features of the invention.

Fig. 2 is a plan view partially in section looking at the upper side of the machine.

Fig. 3 is a similar view but showing the lower side of the machine.

While the invention is susceptible of various modifications and alternative constructions, I have shown in the drawings and will herein describe in detail the preferred embodiment, but it is to be understood that I do not thereby intend to limit the invention to the specific form disclosed, but intend to cover all modifications and alternative constructions falling within the spirit and scope of the invention as expressed in the appended claims.

In the drawings, wherein one form of the invention has been shown merely for illustrative purposes, 10 designates generally a bed or like support which is adapted to be disposed in a generally upright position by lower legs 11 secured at one end of the bed and elongated upper legs 12 extending from and pivotally connected to the upper end of the bed. The bed is preferably supported at a angle intermediate the vertical and the horizontal and this angle of inclination may be adjusted within reasonable limits by means of a conventional slot and wing nut adjustment, generally indicated at 13, connecting the bed and the legs 12. The bed, as may be seen best in Fig. 2, is an elongated member providing a plane surface of substantial width.

As shown in Fig. 1, the upper surface of the bed 10 carries a supply magazine, generally indicated at 14, and an air blowing mechanism 15. The lower surface of the bed carries guide means 16 for directing the gravity induced movement of articles A, such as frozen confections or ice cream bars, along the under face of the bed to a filling station 17 wherein a bag B is presented to receive said articles.

Referring first to the magazine 14, the preferred structure thereof is best seen in Figs. 1 and 2. In this embodiment, the magazine is formed of two spaced side sections each comprising elongated side bars 18, an arcuate upturned bottom plate 19, and a supporting bar 20 to which the side bars 18 and bottom plate 19 are rigidly affixed. The bed 10 at a suitable point intermediate its ends is provided with a sizable aperture in which the supporting bars 20 are positioned in horizontally spaced relationship and each supporting bar carries a vertically disposed flange 21 which extends through said aperture and for a substantial distance beyond the under side of said bed. The purpose of the flanges 21 will hereinafter be more fully described. The magazine holds a stack of bags which are fed rearwardly toward the plane of the bed by such means as a weight 22 which rests against the uppermost bag and exerts a feeding force on the stack of bags due to the arcuate form of the bottom plates 19.

As each bag moves into the plane of the bed, or, in other words, moves into registration with the opening in the bed, the bag is opened by a blast of air directed inwardly of the mouth thereof. For this purpose a suitable blower mecha-

nism, indicated at 23 (Fig. 2), which may be driven by an electric motor 24 or the like, is supported on the upper surface of the bed with the outlet conduit 25 from the blower directed downwardly. Rigidly connected about the mouth of the conduit is a tubular duct 26 which is flattened to provide a wide and relatively narrow mouth constituting a nozzle 27. Preferably the blower mechanism, including the nozzle, is supported as a unit in vertically extending guideways 28 (Fig. 2) for movement to facilitate adjustment of the mouth of the nozzle properly with respect to the bags presented in the opening in the bed. For making this adjustment, such means as a screw 29 (Fig. 2) rotatably mounted in bearings 30 and engaging a nut 31 rigid with the blower mechanism may be provided.

The bags which are preferably used in the present machine are of the type in which one side face is longer than the other to provide a flap, herein indicated by the letter C. When the bags are stacked in the magazine, they are so arranged that the shorter sides thereof face toward the under side of the machine. Means is provided for engaging each bag, and particularly the flap C thereof, as it is presented at the opening in the bed to hold said bag in a stationary position while the air blast from the nozzle 27 opens the bag and until an article has entered the open bag. In this embodiment, the under side of the nozzle carries a sharpened projection or pin 33 which is centrally located and extends toward the magazine to engage the flap C of each bag near the upper edge thereof as it is presented in the opening of the bed. The upper side of the nozzle carries downwardly extending spring fingers 33 (best seen in Figs. 2 and 3) for engaging opposite sides of flap C. These elements cooperate in properly correlating the mouth of the bag with respect to the nozzle so that the blast from the nozzle, as shown in Fig. 1, is directed exactly against the mouth of the closed bag as it is presented in the opening to force the shorter flap outwardly and thereby open the bag to its fullest extent.

In order to prevent the bag from being removed from the filling station by the air blast, spring fingers 34 (see Figs. 2 and 3) are suitably mounted on the supporting bars 20 to extend inwardly a short distance of the magazine, these fingers being positioned to engage opposite sides of each bag near the bottom thereof as it is presented in the opening in the bed. The bottom plates 19 terminate substantially in the plane of the bed, as indicated at 35 (Fig. 1), and form a narrow ledge or step on which the bottom of the bag rests. Thus, the bag is supported with the longer side disposed substantially in the plane of the under side of the bed and with the open mouth of the bag extended outwardly away from the under side.

The guide means 16 preferably comprises a base plate 36, supported in substantially parallel and spaced relation to the bed 10, and side guides 37 extending between the base plate 36 and the bed. The side guides 37 are, as shown in Fig. 3, preferably mounted on the flanges 21 and extend upwardly therefrom along the under side of the bed. The inner opposed faces of the side guides carry flexible yielding guides 38 which are secured to the side guides near the upper ends thereof and extend convergently downwardly to a point substantially adjacent the end of the nozzle 27. These resilient guides serve to center a descending article and to direct the article exactly into the mouth of the bag.

The base plate 36, which provides a surface over which a descending article slides, terminates at a point just above the filling station 17 and is detachably and adjustably supported from the bed as by means of the wing nuts 39. The upper end of the base plate is spaced from the bed a somewhat greater distance than at the bottom end and is curved away from the bed, as indicated at 40, to facilitate insertion of articles into guide means if the machine is fed by hand. It is, however, preferred to associate the curved end 40 of the guide plate with the upper run of a conveyer belt 41 which is supported and driven to discharge a succession of articles into the guide means.

As the articles are so delivered to the guide means, they fall rapidly by gravity downwardly therethrough, during which movement the articles are centered in the guide means by the resilient guide 38. It will be noted that while the guide means terminates a short distance above the mouth of an open bag presented at the filling station 17, the momentum of the descending article is ample to carry the article into the bag. When the article strikes the bottom of the bag, the impact thereof pulls the bag outwardly from its position of rest on the step 35 and releases the bag from the projection 32 and spring fingers 33 and 34. Thereafter the packaged articles are free to fall to a collection point. It is, however, convenient to provide means for delivering packaged articles to the upper run of a removing conveyer 42 and for this purpose an arcuate plate 43 carried by the bed is disposed below the filling station 17 to receive and direct the falling packaged articles to the conveyer.

Simple means is provided for adjusting the mechanism to accommodate articles of various sizes. As herein illustrated, the adjusting means comprises spaced nut elements 44 formed at the upper and lower ends of each of the supporting bars 20. The nut elements on one of the bars 20 engage right-hand threads on upper and lower screws 45, while the nut elements on the other bar 20 engage left-hand threads formed on said screws. The screws are journaled in suitable bearings 46 on the bed. A chain 47 and sprockets 48 connect the two screws for conjoint rotation through manipulation of a finger piece 49 mounted on one of the screws. It will be evident that by such manipulation, the supporting bars 20 may be caused to approach or recede from each other and thereby increase or decrease the width of the magazine. Raising or lowering of the blower mechanism through manipulation of the screw 29 effects an adjustment of the nozzle and the flap engaging pin and fingers 32, 33 relative to the bag. As has been pointed out, the side guides 37 are rigidly affixed to the flanges 21 which, in turn, are a part of the supporting bars 20. Hence, the above described adjustment of the magazine serves also to vary the width of the guide means 16. The base plate 36 of the guide means is of ample width to extend beyond both sides of the side guides 36 in any of the positions of adjustment thereof. It is advantageous that all of these adjustments may be made from the upper exposed side of the bed since the entire control of the machine is possible from the upper or front side leaving the lower or rear side entirely unobstructed.

In operation a succession of articles may be delivered to the machine in almost continuous

succession since very little time is required in opening each succeeding bag by the air blast. Moreover, the fact that a descending article moves from one end of the machine to the other without noticeable pause contributes materially to the speed of machine operation. The mounting of the magazine on the upper side of the bed is advantageous since the magazine is conveniently accessible to the operator in replenishing the supply of bags. A further advantage incident to the disposition of the guide means on the under side of the bed is that the machine may be easily associated with suitable means for automatically feeding and removing articles from the machine.

I claim as my invention:

1. A machine for filling bags comprising, in combination, a generally upright bed supported at an acute angle, a vertical guideway including side walls and a back plate spaced from the under side of said bed, said back plate being adapted to receive articles from a feeding mechanism, spring members secured at the upper ends of said side walls and converging inwardly within said side walls to center descending articles, said bed having an aperture therein below said guideway, a bag supplying magazine located on the upper side of said bed in register with said aperture for presenting single bags in succession therein, means for holding the single bags so presented, and means for directing an air blast into the mouth of a presented and held bag to open the same, said bag being instantly releasable from said holding means upon the impact of an article therein to allow the enclosed article to fall freely from the machine.

2. A machine for filling bags comprising, in combination, a generally upright bed supported at an angle and having a sizable aperture therein, a magazine on one side of said bed in register with said aperture comprising separately movable sections each including a side wall and a part of the bottom wall, means for adjusting said sections horizontally to adapt the magazine for bags of different sizes, means associated with said magazine for presenting bags in succession in said aperture, air blast delivering mechanism arranged to direct a blast against the mouth of a bag so presented, and means on the side of the bed opposite the magazine for directing the fall of an article into an open bag including side guide members secured to and horizontally adjustable with said movable sections of the magazine.

ALBERT C. BROWN.