June 7, 1938. W. L. KEEFER 2,119,813

ABRADING APPARATUS

Original Filed May 13, 1936

Fig. 1

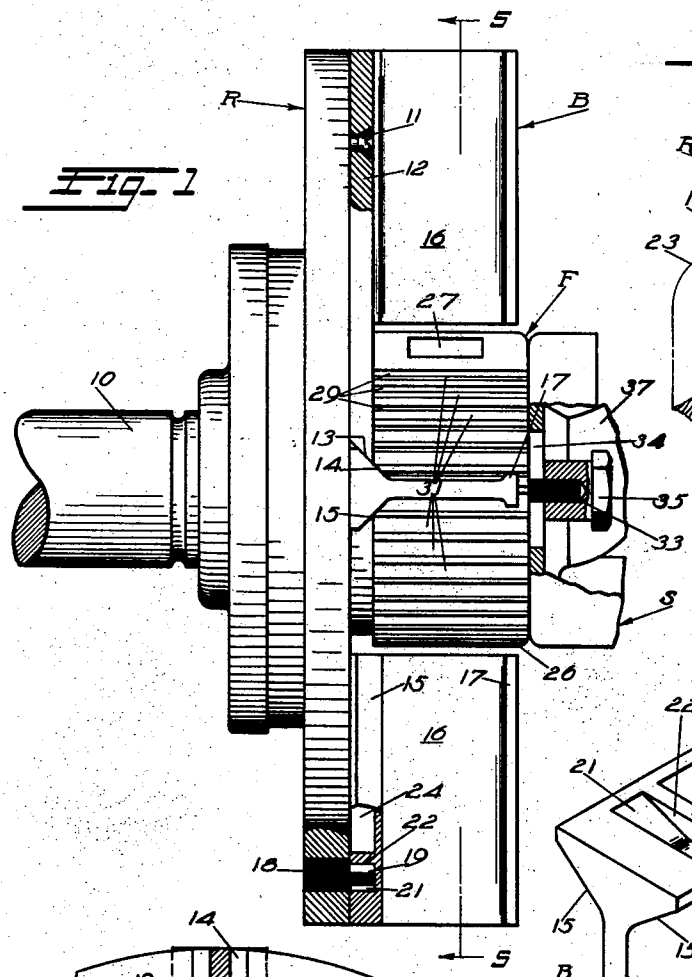

Fig. 3

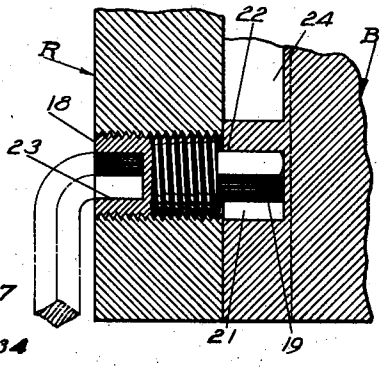

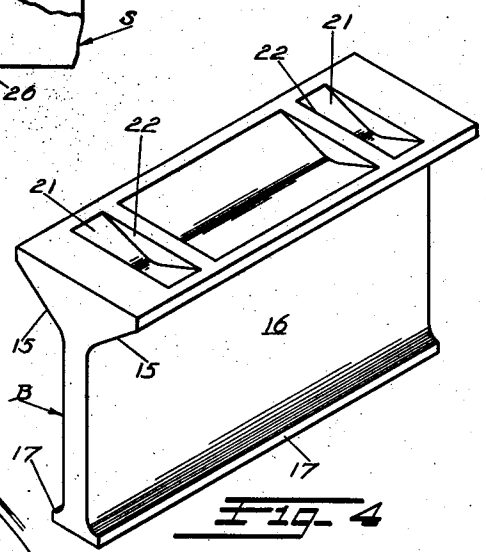

Fig. 4

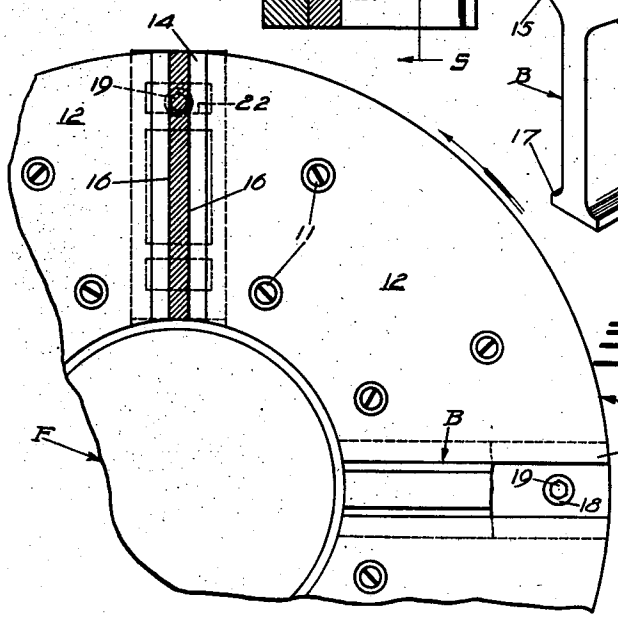

Fig. 2

Inventor
Walter L. Keefer

Strauch & Hoffman
Attorneys

Patented June 7, 1938 2,119,813

UNITED STATES PATENT OFFICE

2,119,813

ABRADING APPARATUS

Walter L. Keefer, Hagerstown, Md., assignor to Pangborn Corporation, Hagerstown, Md., a corporation of Maryland

Original application May 13, 1936, Serial No. 79,559. Divided and this application April 6, 1938, Serial No. 200,521

11 Claims. (Cl. 51—9)

This invention relates to abrading apparatus and more particularly to mechanical apparatus for propelling abrasives at abrading velocities.

Abrasive throwing wheels having bladed rotors have been known in the art for many years, and although they are now going into rather wide use they are open to the objection that valuable time is lost changing blades. The blades of abrasive propelling rotors must be made removable, so that they may be replaced when they have worn out, and yet must be held so securely that they will resist the tremendous centrifugal force exerted when the wheel is operating.

The centrifugal abrading machines in use today are open to the further disadvantage that the blades wear out rapidly, which entails high maintenance costs. The blades would have a reasonable life if the wear occurred uniformly throughout the width of their propelling surfaces, but it has been found that through casting or other inaccuracies, substantially all of the abrasive admitted to each blade will take a course in a localized stream thereover when the blades are first placed in use, and as time goes on the blades will be deeply worn in this particular region with the result that all of the abrasive traversing the blade will take this course, producing rapid break-down of the blade.

It is a primary object of this invention to provide an abrading machine blade assembly that securely holds the blades in place and yet permits them to be removed and replaced in a minimum of time.

It is a further important object of the invention to provide a novel blade assembly for abrading machines that will hold all of the blades securely in place while the machine is operating, will permit easy and rapid removal and replacement of the blades when they wear out and which will also permit the blades to be removed and replaced in the machine in a different relationship to present different surfaces to the abrasive when certain of their surfaces have become worn.

A further object is to provide, in an abrading machine having a bladed rotor for propelling the abrasive, a novel blade mounting assembly which will securely hold the blades in place and will not work loose during operation of the machine, and which will permit the blades to be quickly and easily removed from the rotor.

A further object is to refine and improve certain detailed features of centrifugal abrading machines, and this application constitutes a division of my co-pending application Serial No. 79,559, filed May 13, 1936.

Further objects of the invention will become apparent as the specification proceeds in connection with the annexed drawing, and from the appended claims.

In the drawing:

Figure 1 is a side elevational view of an abrasive propelling rotor equipped with the blade assembly of this invention, with parts thereof broken away in order to more clearly illustrate the structure involved.

Figure 2 is a view looking at the wheel of Figure 1 from the right-hand end of that figure, with parts broken away for clarity of illustration.

Figure 3 is an enlarged fragmental sectional view illustrating the manner in which the blades cooperate with their locking screws.

Figure 4 is an isometric view of one of the blades of the invention.

With continued reference to the drawing, wherein like reference characters have been employed to designate like parts throughout the several views thereof, the rotor is designated at R, and it is rigidly secured to a shaft 10. Shaft 10 is mounted for rotation in any desired bearing assembly (not shown) and rotor R carries a plurality of abrasive propelling blades B. Blades B terminate short of the center of the rotor to define a central abrasive admitting space in which an abrasive feeding device F is supported for feeding a stream of abrasive over the inner ends of blades B.

The feed device will be presently described, and it effects directional discharge of the abrasive thrown from the wheel, but it is to be understood that insofar as the blades and blade mounting are concerned, the invention is not limited to a particular feeding device but may be applied to any type of abrading machine. For instance, feeding device F may assume the form of a pipe or a chute for dumping the abrasive into the central space and effecting a three hundred and sixty degree discharge of the abrasive. Also, blades B have been shown as four in number, but it is to be understood that the invention is applicable to rotors having more or less than four blades.

Secured to the face of rotor R, by a plurality of counter-sunk screws 11, are four symmetrically arranged plates 12. The radial edges of plates 12 are provided with bevelled faces 13, and the adjacent edges of each pair of plates define a dove-tail groove 14, as seen in Figure 1.

Blades B are provided with correspondingly dove-tail shaped bases to fit in grooves 14, and have inclined faces 15 cooperating with walls 13

of plates 12. The inclined faces 15 of blades B merge into abrasive propelling surfaces 16 provided on each side of the blade. As seen in Figure 1, inclined faces 15 merge with plates 12 in a region spaced from their propelling surfaces 16, with the result that the abrasive moving outwardly over surfaces 16 is maintained out of abrading contact with plates 12, which are permanent parts of the machine. The free edges of blades B are each provided with a flange or ridge 17 to confine the outwardly moving abrasive to surfaces 16.

The blades are accordingly mounted for guided movement toward and away from the axis of the rotor, and although grooves 14, which constitute the guideways, are shown as being disposed substantially radially, it is to be understood that they may be inclined forwardly or rearwardly with respect to the direction of rotation if desired without departing from the spirit of the invention.

The means employed for restraining blades B against outward movement preferably takes the form of a screw 18, threaded into rotor R adjacent the outer end of each guideway 14. Each screw 18 is provided with a hex head 19 which projects into a recess 21 in the base of each blade B and cooperates with a wall 22 thereof to positively arrest outward movement of the blades. The flat sides of head 19 provide a large gearing surface for wall 22 and also prevent screws 18 from working loose in operation.

Referring to Figures 2 and 3, wall 22 and its opposite wall are spaced apart a distance which is greater than the greatest diameter of hex heads 19, with the result that blades B can be slipped into place in grooves 14 and screws 18 turned up until they assume the position shown in Figure 3. Blades B may then be pulled outwardly until their walls 22 abut one of the flat sides of hex heads 19 as seen in Figure 3, or they may be left in their inner positions because when the rotor is started centrifugal force will bring them into cooperating relationship to screws 18. The inherent friction present between blades B and their guides may be relied upon to restrain them against inward movement when the rotor is subsequently stopped, but if desired, spring means, taking the form of a split resilient ring, encircling feed device F and engaging the inner ends of the blades, may be used to positively hold them in engagement with screws 18.

Although screws 18 may be provided with any suitable formation to permit them to be turned home with a wrench, they are preferably internally formed with a hex socket 23 in order that the screws may be so dimensioned as to lie flush with the rear surface of rotor R when they are turned home. It is not necessary to turn screws 18 into a final position where a flat side of hex head 19 will be disposed in parallelism with wall 22 of recess 21 because the forces set up by rotation of the wheel will cause the blades to work screws 18 into the relationship shown in Figures 2 and 3. Screws 18 are preferably designed, however, so that the faces of socket 23 and hex head 19 are disposed in registry, as seen in Figure 3, with the result that the relationship of the surfaces of hex head 19 to wall 22 of blade B may be determined by merely glancing at socket 23. Also, if a wrench of the type shown in dotted lines in Figure 3 is used, the relationship of the parts will be directly indicated by the position of the wrench handle.

If, however, the heads of screws 18 are so dimensioned as to seat in the bottoms of recesses 21 when they are turned home it is unnecessary to take any particular precaution in installing the blades because screws 18 are thus automatically stopped in approximately proper position and will assume proper position when the wheel is started.

As seen in the drawing, when the screws are turned home a clearance exists between their shoulders and the parts of blades B defining recesses 21.

Although a particular form of locking assembly has been illustrated, it is to be understood that other forms of locking devices, which themselves are locked by the blades, may be used without departing from the spirit of this invention. For instance, instead of using screws 18, simple pins, having formations at their ends for interlocking engagement with the blades when the latter are slid outwardly, may be used if desired. Moreover, hex head 19 may be made with more or less than six sides if desired. For instance, square headed screws may be used if desired.

Referring now to Figure 4, each blade B is provided with two recesses 21 in its base and it is therefore symmetrical in form. The base of the blade also may or may not be cored out, as at 24. With the wheel rotating in the direction indicated in Figure 2, the abrasive is picked up by and discharged from the counter-clockwise surfaces 16 of blades B. By reason of the symmetrical design of blades B it is possible to remove the blades when they have become partially worn and reverse them end-for-end and thereby bring a new propelling surface into cooperation with the abrasive. The worn surface is accordingly placed on the clockwise side of each blade. When the new surface has become worn the blades are of course discarded.

If an uncored blade is employed, it is to be understood that a single recess 21, located mid-way between the ends of the blade, may be used. Also, two screws 18 may be employed to hold each blade of the present invention in place, but it has been found that one screw is adequate, and the term "a screw" or "a securing device" as employed in the appended claims is intended to embrace the use of one or more screws 18 or their equivalents.

As seen in Figure 1, feeding device F comprises a cylindrical member 26 having an abrasive discharge opening 27 and a plurality of external teeth having faces 29 and 31. Cylindrical member 26 is supported for adjustable rocking movement about the axis of the rotor upon a support S. Cylindrical member 26 is provided with a pair of studs 33, which project through a pair of arcuately-shaped openings 34 provided in support S. A pair of nuts 35 are threaded on studs 33 and are operable to clamp feed device F to support S in any desired adjusted position, for varying the direction of discharge from the wheel.

Support S is provided with a spout portion 37 through which the abrasive may be admitted to the wheel and the abrasive fed through the spout in the particular wheel shown is introduced into the center of a hollow impeller fully disclosed and claimed in my aforesaid co-pending application, and in which the feature of providing the feed chamber F with teeth having surface 29 and 31 is also more fully described and claimed.

Although it is preferable to employ the blade assembly with a rotor having but a single disc to which plates 12 are secured, the invention is clearly applicable to rotors having two discs as

the guideway and/or the blade locking assembly may be duplicated on each disc.

The invention may be embodied in other specific forms without departing from the spirit or essential characteristics thereof. The present embodiment is therefore to be considered in all respects as illustrative and not restrictive, the scope of the invention being indicated by the appended claims rather than by the foregoing description, and all changes which come within the meaning and range of equivalency of the claims are therefore intended to be embraced therein.

What is claimed and desired to be secured by United States Letters Patent is:

1. For use in an abrading machine, a rotor having at least one guide means provided thereon, an abrasive propelling blade mounted in said guide means, an elongated member extending through said rotor and having a locking portion which is movable into the path of a surface of said blade when said member is rotated about its axis, said locking portion of said member being so shaped that when said blade surface is engaged therewith said member cannot be rotated about its axis and is thereby maintained in locking position.

2. For use in an abrading machine, a rotor having at least one outwardly extending guideway provided thereon, an abrasive propelling blade mounted for sliding movement in said guideway, said blade having at least one outwardly facing abutment wall provided thereon, a locking member threaded into said rotor and movable into the path of movement of said blade for restraining the same against outward movement in response to centrifugal force, said locking member having a portion adapted for interlocking engagement with said abutment wall of said blade, whereby said blade is operable to restrain said locking member against turning movement when said rotor is in operation.

3. The rotor construction described in claim 2 wherein the said portion of said locking member is provided with flat sides which cooperate with the abutment wall of said blade.

4. The rotor construction described in claim 2, wherein the said locking portion of said locking member is provided with flat sides for cooperation with the abutment wall of said blade, and wherein the other end of said locking member is provided with means for indicating the position of the flat sides thereof.

5. The rotor construction described in claim 2, wherein said locking member comprises a screw having at one end a flat sided head whose greatest diameter is less than that of the body of the screw, and at the other end an internal wrench receiving socket.

6. The rotor construction described in claim 2, wherein said blade is provided with an inwardly facing abutment wall located outwardly of said outwardly facing abutment wall for cooperation with said locking member to prevent inward movement of said blade, said abutment walls being spaced apart a distance at least as great as the diameter of said portion of said locking member.

7. In an abrading machine, a rotor mounted for rotation, an abrasive propelling blade operably associated with said rotor and having a propelling surface facing forwardly with respect to the direction of rotation and a propelling surface facing rearwardly with respect to the direction of rotation, said first-named propelling surface being operable to pick-up the abrasive and discharge it at an abrading velocity, said blade being substantially symmetrical and having means associated therewith for selectively securing it to said rotor with said first-named or said second-named propelling surface facing forwardly with respect to the direction of rotation, whereby said blade may be reversed when one of its propelling surfaces has become worn to a predetermined degree.

8. The rotor construction described in claim 7 wherein said means for securing said blade to said rotor is operable to cooperate with a single side edge of,. and support said blade upon said rotor with either of said propelling surfaces facing forwardly, said blade being reversible end-for-end when it is changed to present a different propelling surface to the abrasive.

9. For use in an abrading machine having a bladed abrasive propelling rotor, an abrasive propelling blade of elongated generally flat configuration, said blade having an abrasive propelling surface on each side thereof, and having a base portion formed along one of its side edges for securing it to a rotor, said blade having a flange formed along the other of its side edges, for confining abrasive to both of said abrasive propelling surfaces.

10. The blade construction described in claim 9, wherein said base portion is provided with at least one recess facing away from the side edge of said blade and providing a pair of walls spaced apart in a direction parallel to the major axis of the blade.

11. For use in an abrading machine, a rotor having at least one outwardly extending guideway provided thereon, an abrasive propelling blade mounted for sliding movement in said guideway and having an abutment face, and means supported by said rotor and operable to engage said abutment face and restrain said blade against removal from said guideway when it is disposed in a locking position, and to allow said blade to be removed when it is disposed in a release position, said abutment face and said locking means being so shaped that when they are engaged said locking means cannot be moved into non-locking position, whereby said blade is operable to maintain said means in blade locking position when said rotor is in operation, said guideways comprising a pair of substantial radial outwardly extending surfaces between which said blade is disposed, and wherein said locking means is carried by said rotor and disposed between said surfaces.

WALTER L. KEEFER.