(19) Europäisches Patentamt
European Patent Office
Office européen des brevets

(11) EP 4 064 797 B1

(12) **EUROPEAN PATENT SPECIFICATION**

(45) Date of publication and mention of the grant of the patent:
27.12.2023 Bulletin 2023/52

(21) Application number: **21165124.5**

(22) Date of filing: **26.03.2021**

(51) International Patent Classification (IPC):
H05B 47/18 *(2020.01)* ***H05B 47/19*** *(2020.01)*

(52) Cooperative Patent Classification (CPC):
H05B 47/18; H05B 47/19

(54) **COMMUNICATION GATEWAY MODULE**

KOMMUNIKATIONS-GATEWAY-MODUL

MODULE DE PASSERELLE DE COMMUNICATION

(84) Designated Contracting States:
AL AT BE BG CH CY CZ DE DK EE ES FI FR GB GR HR HU IE IS IT LI LT LU LV MC MK MT NL NO PL PT RO RS SE SI SK SM TR

(43) Date of publication of application:
28.09.2022 Bulletin 2022/39

(73) Proprietor: **Tridonic GmbH & Co KG**
6851 Dornbirn (AT)

(72) Inventors:
- **Santiago, Alekssander**
  6850 Dornbirn (AT)
- **Baker, Adam**
  6850 Dornbirn (AT)
- **Makwana, Deepak**
  6850 Dornbirn (AT)
- **Shukla, Jagjitpati**
  6850 Dornbirn (AT)

(74) Representative: **Rupp, Christian**
Mitscherlich PartmbB
Patent- und Rechtsanwälte
Karlstraße 7
80333 München (DE)

(56) References cited:
WO-A1-2020/194355 **GB-A- 2 554 987**
US-A1- 2017 231 065

Note: Within nine months of the publication of the mention of the grant of the European patent in the European Patent Bulletin, any person may give notice to the European Patent Office of opposition to that patent, in accordance with the Implementing Regulations. Notice of opposition shall not be deemed to have been filed until the opposition fee has been paid. (Art. 99(1) European Patent Convention).

EP 4 064 797 B1

Processed by Luminess, 75001 PARIS (FR)

Description

TECHNICAL FIELD OF THE INVENTION

[0001] The invention relates, in general, to LED lighting wireless control modules. In particular, the invention relates to a communication gateway module for translating between a wired (e.g.) DALI bus communication and a (non-DALI) wireless communication.

BACKGROUND OF THE INVENTION

[0002] LED drivers, which comprise a control interface, allow their light output to be dynamically controlled. For example, the DALI control interface is one of the most common control interfaces used in LED lighting. In particular, a DALI interface allows a digital signal to be sent over two wires from a controller to a LED driver (see Fig. 1(a)).

[0003] The DALI control interface can be extended to include wireless devices as well. In this case, the two wires interface can be replaced by a wireless intermediate gateway, as shown in Fig. 1(b).

[0004] In Fig. 1(a), only the DALI wires are represented. However, most of the devices in the market are powered either via the DALI wires themselves or they possess their own power supply, for example from a mains converter (see Fig. 2).

[0005] Devices with internal power supply may or may not have integrated DALI power supply. Devices with integrated DALI power supply provide energy to the DALI bus exclusively or in conjunction with another DALI power supply. The only restriction imposed by DALI in terms of paralleling DALI power supplies is that the total current circulating on the DALI bus cannot exceed the bus limit or 250 mA and the peak transient current of 450 mA. So, multiple power supplies can provide energy to the same bus.

[0006] However, inherently, these devices, in particular the communication gateway modules, when designed to be supplied via DALI or via an own power supply, are limited in their application.

[0007] WO 2020/194355 A1 and GB 2554987 A respectively disclose a communication gateway module being capable of powering light fixtures from two different sources of electrical power.

[0008] Thus, it is an objective to provide for an improved power supply for a wired bus/wireless communication gateway module.

SUMMARY OF THE INVENTION

[0009] The object of the present invention is achieved by the solution provided in the enclosed independent claims. Advantageous implementations of the present invention are further defined in the dependent claims.

[0010] According to a first aspect, the invention, relates to a communication gateway module having: a wireless interface, a wired bus interface comprising wired bus terminals, e.g. a DALI bus interface, a mains supply interface comprising mains voltage terminals; and a control circuit. The control circuit is configured to determine whether a mains voltage is supplied to the mains supply terminals and to power the gateway module in the positive case, and to determine whether a bus with non-zero quiescent state, such as e.g. a DALI bus, is connected to the wired bus terminals, and to power the gateway module off the wired bus terminals in case no mains voltage is supplied at mains voltage terminals.

[0011] This provides the advantage that the gateway module can be powered both by the mains supply or the wired bus interface, e.g. a DALI power supply.

[0012] In an embodiment, the communication gateway module further comprises a bus voltage supply unit for supplying the bus at the wired bus terminals with electrical power off the mains voltage terminals.

[0013] This provides the advantage that power for supplying the bus can be taken from the mains voltage terminals if necessary.

[0014] In an embodiment, the communication gateway module comprises a first current limiting circuit configured to limit any current drawn from the wired bus terminals.

[0015] In an embodiment, the communication gateway module comprises a second current limiting circuitry configured to limit any current supplied to the wired bus terminals.

[0016] In an embodiment, the communication gateway module comprises a circuitry for commutating the polarity of the voltage of the electrical power supplied to the bus at the wired bus terminals.

[0017] In an embodiment, the communication gateway module comprises an inverting stage configured to operate as a rectifier when supply is drawn from the bus terminals.

[0018] According to a second aspect, the invention relates to an LED lighting system. The LED lighting system comprises a communication gateway module of the first aspect or any of its embodiments, and an LED driver.

[0019] According to a third aspect, the invention relates to an LED luminaire. The luminaire comprises a communication gateway module of the first aspect or any of its embodiments; an LED driver; and a light source comprising one or more

LEDs or OLEDs, the light source being operable by the LED driver.

BRIEF DESCRIPTION OF THE DRAWINGS

[0020] The invention will be explained in the followings together with the figures.

Fig. 1 shows a DALI interface according to prior art;

Fig. 2 shows a DALI interface according to prior art;

Fig. 3 shows a communication gateway module according to an embodiment; and

Fig. 4 shows a communication gateway module according to an embodiment;

Fig. 5 shows a flow chart of a communication gateway module according to an embodiment;

Fig. 6 shows a first current limiting circuit and a second current limiting circuit of a communication gateway module according to an embodiment; and

Fig. 7 shows a first current limiting circuit, a second current limiting circuit and an inverter/rectifying circuit of a communication gateway module according to an embodiment.

DETAILED DESCRIPTION OF THE PREFERRED EMBODIMENTS

[0021] Aspects of the present invention are described herein in the context of a communication gateway module.

[0022] The present invention is described more fully hereinafter with reference to the accompanying drawings, in which various aspects of the present invention are shown. This invention however may be embodied in many different forms and should not be construed as limited to the various aspects of the present invention presented through this disclosure. Rather, these aspects are provided so that this disclosure will be thorough and complete, and will fully convey the scope of the present invention to those skilled in the art. The various aspects of the present invention illustrated in the drawings may not be drawn to scale. Rather, the dimensions of the various features may be expanded or reduced for clarity. In addition, some of the drawings may be simplified for clarity. Thus, the drawings may not depict all of the components of a given apparatus.

[0023] Various aspects of a communication gateway module will be presented. However, as those skilled in the art will readily appreciate, these aspects may be extended to aspects of communication gateway modules without departing from the invention.

[0024] The term "LED luminaire" shall mean a luminaire with a light source comprising one or more LEDs or OLEDs. LEDs are well-known in the art, and therefore, will only briefly be discussed to provide a complete description of the invention.

[0025] It is further understood that the aspect of the present invention might contain integrated circuits that are readily manufacturable using conventional semiconductor technologies, such as complementary metal-oxide semiconductor technology, short "CMOS". In addition, the aspects of the present invention may be implemented with other manufacturing processes for making optical as well as electrical devices. Reference will now be made in detail to implementations of the exemplary aspects as illustrated in the accompanying drawings. The same references signs will be used throughout the drawings and the following detailed descriptions to refer to the same or like parts.

[0026] Now referring to Fig. 3, a communication gateway module 300 is shown according to an embodiment.

[0027] The communication gateway module 300 comprises a wireless interface 301 (antenna not shown), a wired bus interface 302 comprising wired bus terminals 302a, 302b, e.g. a DALI bus interface, a mains supply interface 303 comprising mains voltage terminals 303a, 303b; and a control circuit 304.

[0028] The control circuit 304 controls the power supply of the communication gateway module 300 and the communication over the interfaces 301 and 302.

[0029] The control circuit is connected to the interfaces 301, 302 and the mains supply interface 303.

[0030] Further, the communication gateway module 300 is configured to determine whether a mains voltage is supplied to the mains supply terminals 303a, 303b and to power the gateway module 300 in the positive case.

[0031] Sill further, the communication gateway module 300is configured to determine whether a bus with non-zero quiescent state is connected to the wired bus terminals 302a, 302b, and to power the gateway module 300 off the wired bus terminals 302a, 302b in case no mains voltage is supplied at mains voltage terminals 303a, 303b.

[0032] This provides the advantage that the communication gateway module 300 is configured to select its power

source regardless of the sources available, DALI, internal power supply or both.

[0033] Moreover, if a DALI bus is connected, and the DALI bus has a bus supply by a dedicated bus supply unit or an integrated DALI power supply, for example in an operating device for lighting means, the communication gateway module 300 can draw limited power from the DALI bus (limited meaning within the limitations of the DALI specification).

[0034] Further, the communication gateway module 300 is provided with mains supply terminals 303a and 303b. The control circuit 304 in the communication gateway module 300 can determine whether mains and/or DALI power supply is available at the respective terminals. In case mains power supply is available, the priority is on the mains power supply.

[0035] Moreover, the communication gateway module 300 is configured to select the supply source according to any one of the combinations shown in the table below and can possess an integrated DALI Power Supply (IDPS), see circuit 403 on Figure 4, as well.

AC Mains	Powered DALI Bus	Supply options	IDPS
Present	Present	Via mains	Optional ON/OFF
Present	Absent	Via mains	ON
Absent	Present	Via DALI	OFF

[0036] In this manner, advantageously, all possible system scenarios are covered by a single configurable device or communication gateway module 300.

[0037] Preferably, the communication gateway module 300 is provided with a circuitry to power the DALI bus, provided that it is itself provided with mains supply voltage.

[0038] Fig. 4 shows a communication gateway module 300 according to an embodiment.

[0039] In Fig. 4, an AC/DC converter 401 is arranged for being supplied with AC mains voltage from the terminals 303a and 303b and for outputting a DC voltage. The DV voltage is supplied e.g. to a low voltage power supply unit 402. Moreover, it provides energy to the control circuit 304 and its IDPS designated.

[0040] The low voltage power supply (LVPS) 402 is configured to power the control circuit 304, off the DC voltage supplied by the AC/DC converter (401). The control circuit 304 may comprise a microcontroller and RF transceiver, both of which can be integrated as system-on-chip (SoC).

[0041] A first current limiting circuit 403 is connected directly to the output of the AC/DC converter 401 and represents the IDPS according to this embodiment. It can be configured to limit the amount of current provided to the DALI bus according to the DALI specification.

[0042] A second current limiting circuitry 404 limits the current in opposite direction to the first one, limiting the amount of current drawn from the DALI bus, when the DALI bus is used as main power source. Both circuits can be controllable by the control circuit 304 such that the control circuit can e.g. also disable them.

[0043] Both current limiting circuitries can be bypassed by a semiconductor (e.g. diode) in anti-parallel position, to allow the current to flow in both directions.

[0044] The control circuit 304 has a power supply and a RF control responsible for the DALI communications, RF communications and the control of the current limiting circuits 403, 404.

[0045] A DALI TX and DALI RX interface 302 is is configured to receive and transmit according to DALI specifications. It is controlled by the control unit 304.

[0046] Fig. 5 shows a flow chart 500 of an operation of the communication gateway module 300 according to an embodiment.

[0047] After the start 501 the IDPS is disabled in step 502. Afterwards, in step 504 it is checked if the mains voltage is present at the mains terminals. If yes, then in step 505 it is checked for an external power supply supplying the DALI bus with power. In particular, it is checked in step 508 if the DALI bus is high. If yes, then a configuration of the system or the communication gateway module 300 is checked in step 509. In particular, a user input can be used to determine whether the internal power supply IDPS of the communication gateway module 300 should or should not operate when the DALI bus is already powered. This ability provides flexibility to scale up the power of the communication gateway module 300 or to avoid exceeding the DALI system requirements. This input can be in many forms, such as configuration file, settings, button in interface, etc. Afterwards, it is checked if there is a multi-power supplied system in step 510. If yes, then the IDPS is enabled in step 507 and the DALI wireless gateway functions are resumed in step 506.

[0048] If the mains is not present in step 504, then the communication gateway module 300 is powered by DALI supply in step 503 and the DALI wireless gateway functions are resumed in step 506.

[0049] Moreover, if the DALI bus is not high in step 508, then the IDPS is enabled in step 507 and, afterwards, the DALI wireless gateway functions are resumed in step 506.

[0050] Furthermore, if in step510 the system or communication gateway module 300 is not a multi-power supplied

system, then the DALI wireless gateway functions are resumed in step506.

[0051] Fig. 6 shows the first current limiting circuit 403 and the second current limiting circuit 404 of a communication gateway module 300 according to an embodiment.

[0052] In this embodiment, attention is payed to the current limiting stages 403 and 404, wherein the ability to source or sink current from the DALI bus is implemented.

[0053] In this embodiment, the AC/DC converter 401 comprises a flyback converter for supplying a regulated DC voltage at a capacitor C1. The elements D7, R2, Q1, Q2, R1, D1, Q5 and VCTRL1 are part of DALI power supply and are used when the communication gateway module 300 is mains supplied and supplies DALI bus.

[0054] Moreover, the elements D6, R3, Q3, Q4, R5, D2, Q6, R4 and Q11 are part of the circuit used when the communication gateway module 300 is supplied by a DALI bus. The commands VCTRL1 and VCTRL2 are controller signals that are configured to enable and disable the current limiting circuits 403 and 404 depending on the mode of operation. In particular, the command VCTRL1 enables the DALI power supply when the communication gateway module 300 is mains supplied, while the command VCTRL2 disables the current limiting circuit 403 and 404 when the communication gateway module 300 is mains supplied.

[0055] When DALI bus is already supplied from a source outside the gateway module 300, the command VCTRL1 disables the DALI power supply, while, when DALI bus power is supplied, the current limiting circuit 404 is automatically enabled via R4 and Q6 and can only be disabled via the command VCTRL2.

[0056] Fig. 7 shows a first current limiting circuit 403, a second current limiting circuit 404 and an inverter/rectifying circuit 601 of a communication gateway module 300 according to an embodiment.

[0057] In this embodiment, the inverting stage 601 is added to the previous embodiment shown in Fig. 6.

[0058] In particular, the inverting/rectifying section 601 of the circuit allows any DALI polarity on the DALI bus by enabling Q7 and Q10 or Q8 and Q9 pairs. The DALI voltage polarity can be adjusted to match other power supplies on the bus, if existing. When supplied from the DALI bus, the diodes D4, D5, D8 and D9 rectify the DALI input voltage to allow any wire polarity connection.

[0059] Moreover, especially in case a plurality of power supplies are active on the DALI bus, they all have to supply power with the same polarity to the DALI bus. The inverter/rectifier circuitry 601 allows to switch the polarity of the voltage supplied to the DALI bus terminals 302a and 302b.

[0060] Not shown are an LED lighting system and an LED luminaire according to an embodiments.

[0061] The LED lighting system comprises a communication gateway module 300 according to an embodiment; and an LED driver.

[0062] The LED luminaire comprises a communication gateway module 300 according to an embodiment; an LED driver; and a light source comprising one or more LEDs or OLEDs. The light source is operable by the LED driver.

[0063] Although the invention has been illustrated and described with respect to one or more implementations, equivalent alternations and modifications will occur to those skilled in the art upon the reading of the understanding of the specification and the annexed drawings. In addition, while a particular feature of the invention may have been disclosed with respect to only of the several implementations, such features may be combined with one or more other features of the other implementations as may be desired and advantage for any given or particular application.

Claims

1. Acommunication gateway module (300) having:

- a wireless interface (301),
- a wired bus interface (302) comprising wired bus terminals (302a, 302b), e.g. a DALI bus interface,
- a mains supply interface (303) comprising mains voltage terminals (303a, 303b); and **characterised by**
- a control circuit (304) configured to:

  - determine whether a mains voltage is supplied to the mains supply terminals (303a, 303b) and to power the gateway module (300) from the mains supply terminals (303a, 303b) in the positive case, and to
  - determine whether a bus with non-zero quiescent state is connected to the wired bus terminals (302a, 302b), and if so to power the gateway module (300) off the wired bus terminals (302a, 302b) in case no mains voltage is supplied at the mains voltage terminals (303a, 303b).

2. The communication gateway module (300) of claim 1, further comprising a bus voltage supply unit for supplying the bus at the wired bus terminals (302a, 302b), with electrical power off the mains voltage terminals (303a, 303b).

3. The communication gateway module (300) of claim 1 or 2, comprising a first current limiting circuit (403) configured

to limit any current supplied by the communication gateway module (300) to the wired bus terminals (302a, 302b) .

4. The communication gateway module (300) of claim 2, further comprising a second current limiting circuitry (404) configured to limit any current drawn by the communication gateway module (300) from the wired bus terminals (302a, 302b).

5. The communication gateway module (300) of any one of claims 2 or 4, further comprising an circuitry for commutating the polarity of the voltage of the electrical power supplied to the bus at the wired bus terminals (302a, 302b).

6. The communication gateway module (300) of any one of the preceding claims, further comprising an inverting stage (601) configured to operate as a rectifier when power is drawn from the bus terminals (302a, 302b) by the communication gateway module (300).

7. An LED lighting system, comprising

the communication gateway module (300) of any one of the claims 1 to 6; and
an LED driver.

8. An LED luminaire, comprising

the communication gateway module (300) of any one of the claims 1 to 6;
an LED driver; and
a light source comprising one or more LEDs or OLEDs, the light source being operable by the LED driver.

Patentansprüche

1. Kommunikations-Gateway-Modul (300), das aufweist:

- eine drahtlose Schnittstelle (301),
- eine drahtgebundene Busschnittstelle (302), umfassend drahtgebundene Busanschlüsse (302a, 302b), z. B. eine DALI-Bus-Schnittstelle,
- eine Netzversorgungsschnittstelle (303), umfassend Netzspannungsanschlüsse (303a, 303b); und **gekennzeichnet durch**
- eine Steuerschaltung (304), die konfiguriert ist zum:
- Bestimmen, ob die Netzversorgungsanschlüsse (303a, 303b) mit einer Netzspannung versorgt werden und um das Gateway-Modul (300) aus den Netzversorgungsanschlüssen (303a, 303b) in dem positiven Fall anzutreiben, und zum
- Bestimmen, ob ein Bus mit einem Ruhezustand ungleich Null mit den drahtgebundenen Busanschlüssen (302a, 302b) verbunden ist und, falls ja, um das Gateway-Modul (300) aus den drahtgebundenen Busanschlüssen (302a, 302b), für den Fall, dass mit keiner Netzspannung an den Netzspannungsanschlüssen (303a, 303b) versorgt wird, anzutreiben.

2. Kommunikations-Gateway-Modul (300) nach Anspruch 1, ferner umfassend eine Busspannungsversorgungseinheit zum Versorgen des Busses an den drahtgebundenen Busanschlüssen (302a, 302b) mit einer elektrischen Leistung von den Netzspannungsanschlüssen (303a, 303b).

3. Kommunikations-Gateway-Modul (300) nach Anspruch 1 oder 2, umfassend eine erste Strombegrenzungsschaltung (403), die konfiguriert ist, um einen beliebigen Strom, mit dem durch das Kommunikations-Gateway-Modul (300) an die drahtgebundenen Busanschlüsse (302a, 302b) versorgt wird, zu begrenzen.

4. Kommunikations-Gateway-Modul (300) nach Anspruch 2, ferner umfassend eine zweite Strombegrenzungsschaltlogik (404), die konfiguriert ist, um den beliebigen Strom, der durch das Kommunikations-Gateway-Modul (300) aus den drahtgebundenen Busanschlüssen (302a, 302b) gezogen wird, zu begrenzen.

5. Kommunikations-Gateway-Modul (300) nach einem der Ansprüche 2 oder 4, ferner umfassend eine Schaltlogik zum Kommutieren der Polarität der Spannung der elektrischen Leistung, mit der der Bus an den drahtgebundenen Busanschlüssen (302a, 302b) versorgt wird.

6. Kommunikations-Gateway-Modul (300) nach einem der vorstehenden Ansprüche, ferner umfassend eine invertierende Stufe (601), die konfiguriert ist, um als ein Gleichrichter zu arbeiten, wenn die Leistung aus den Busanschlüssen (302a, 302b) durch das Kommunikations-Gateway-Modul (300) gezogen wird.

7. LED-Beleuchtungssystem, umfassend

das Kommunikations-Gateway-Modul (300) nach einem der Ansprüche 1 bis 6; und
einen LED-Treiber.

8. LED-Leuchte, umfassend

das Kommunikations-Gateway-Modul (300) nach einem der Ansprüche 1 bis 6;
einen LED-Treiber; und
eine Lichtquelle, umfassend eine oder mehrere LEDs oder OLEDs, wobei die Lichtquelle durch den LED-Treiber betriebsfähig ist.

Revendications

1. Module passerelle de communication (300) ayant :

- une interface sans fil (301),
- une interface de bus câblé (302) comprenant des terminaux de bus câblé (302a, 302b), par exemple une interface de bus DALI,
- une interface d'alimentation secteur (303) comprenant des bornes de tension secteur (303a, 303b) ; et **caractérisé par**
- un circuit de commande (304), configuré pour :
- déterminer le fait de savoir si une tension secteur est fournie aux bornes d'alimentation secteur (303a, 303b) et pour alimenter le module passerelle (300) à partir des bornes d'alimentation secteur (303a, 303b) dans le boîtier positif, et pour
- déterminer le fait de savoir si un bus avec un état repos non nul est connecté aux terminaux de bus câblé (302a, 302b), et si oui, pour alimenter le module passerelle (300) hors des terminaux de bus câblé (302a, 302b) dans le cas où aucune tension secteur n'est fournie au niveau des bornes de tension secteur (303a, 303b).

2. Module de passerelle de communication (300) selon la revendication 1, comprenant en outre une unité d'alimentation en tension de bus pour fournir le bus au niveau des terminaux de bus câblés (302a, 302b), avec une alimentation électrique des bornes de tension de secteur (303a, 303b).

3. Module de passerelle de communication (300) selon la revendication 1 ou 2, comprenant un premier circuit de limitation de courant (403) configuré pour limiter tout courant fourni par le module de passerelle de communication (300) aux terminaux de bus câblé (302a, 302b).

4. Module de passerelle de communication (300) selon la revendication 2, comprenant en outre un second circuit de limitation de courant (404) configuré pour limiter tout courant tiré par le module de passerelle de communication (300) à partir des terminaux de bus câblés (302a, 302b).

5. Module de passerelle de communication (300) selon l'une quelconque des revendications 2 ou 4, comprenant en outre un circuit pour commuter la polarité de la tension de l'alimentation électrique fournie au bus au niveau des terminaux de bus câblés (302a, 302b).

6. Module de passerelle de communication (300) selon l'une quelconque des revendications précédentes, comprenant en outre une étape d'inversion (601) configurée pour fonctionner en tant que redresseur lorsqu'une alimentation est tirée à partir des terminaux de bus (302a, 302b) par le module de passerelle de communication (300).

7. Système d'éclairage DEL, comprenant

le module passerelle de communication (300) selon l'une quelconque des revendications 1 à 6 ; et
un pilote DEL.

8. Luminaire DEL, comprenant

le module passerelle de communication (300) selon l'une quelconque des revendications 1 à 6 ;
un pilote DEL ; et
une source de lumière comprenant une ou plusieurs DEL ou DELO, la source de lumière étant exploitable par le pilote DEL.

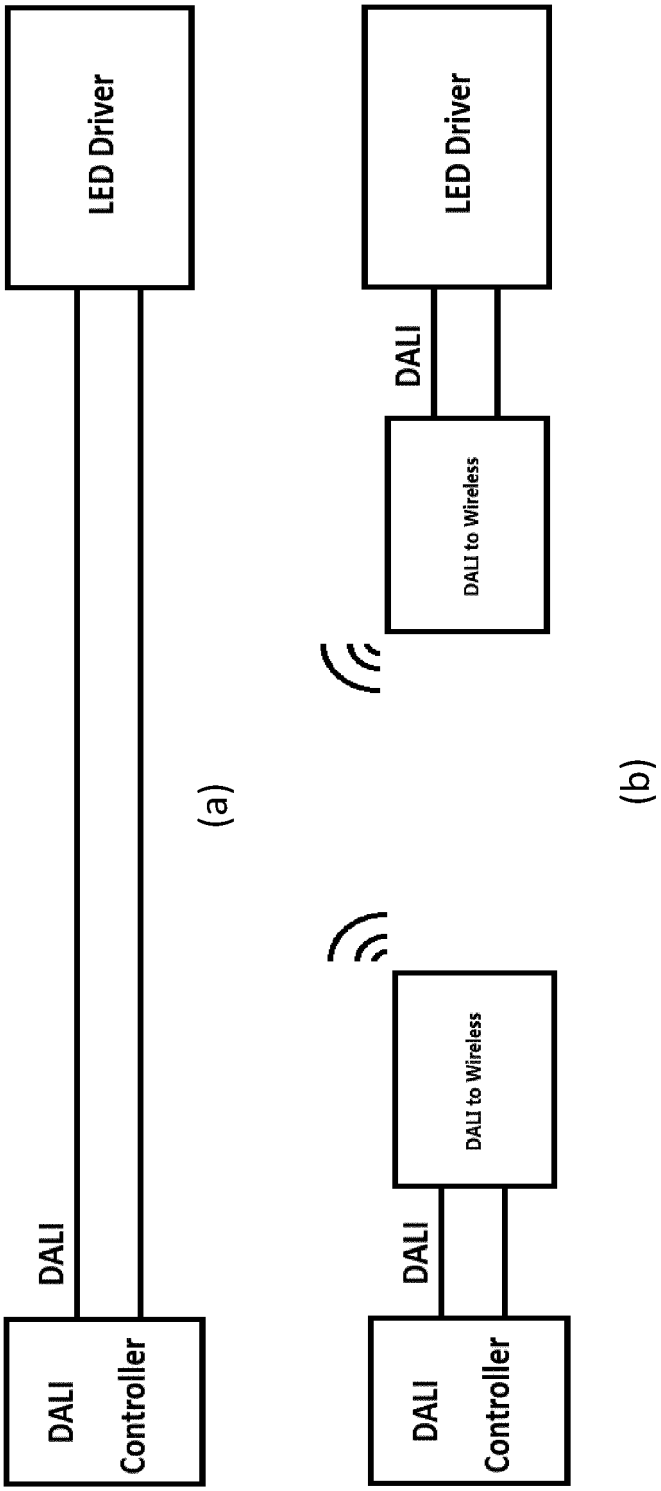
DALI
Controller
LED Driver
(a)
DALI
Controller
DALI
DALI to Wireless
LED Driver
DALI
DALI to Wireless
(b)

Fig. 1

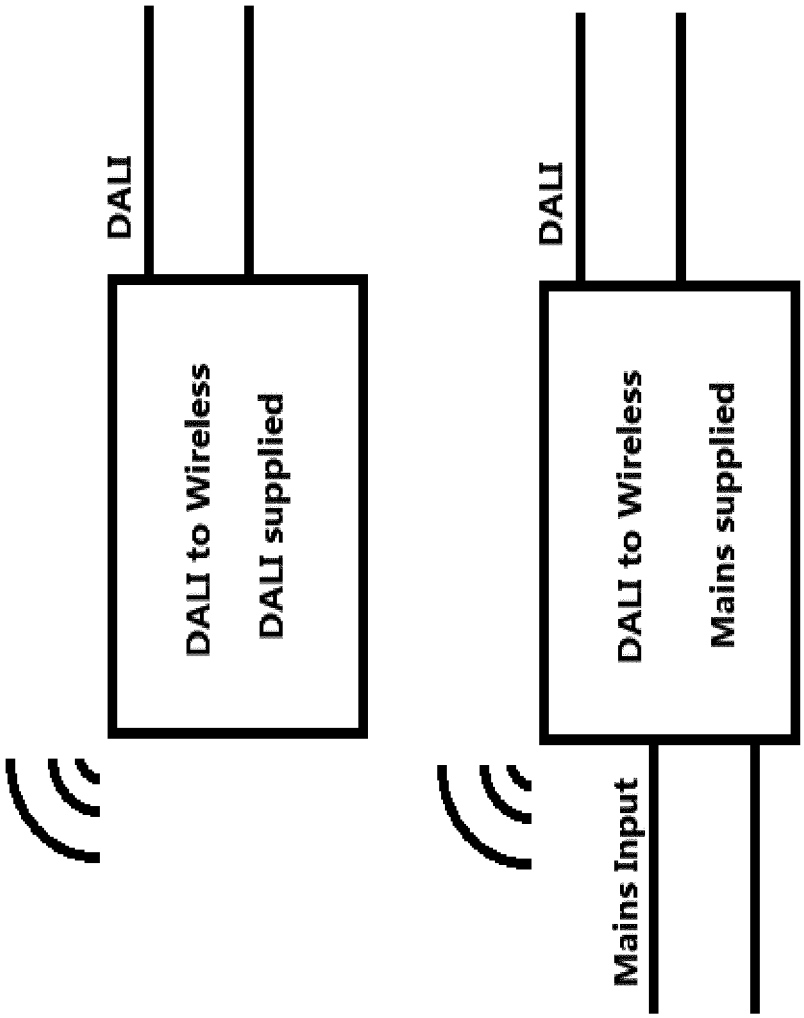
DALI
DALI to Wireless
DALI supplied
DALI
DALI to Wireless
Mains supplied
Mains Input

Fig. 2

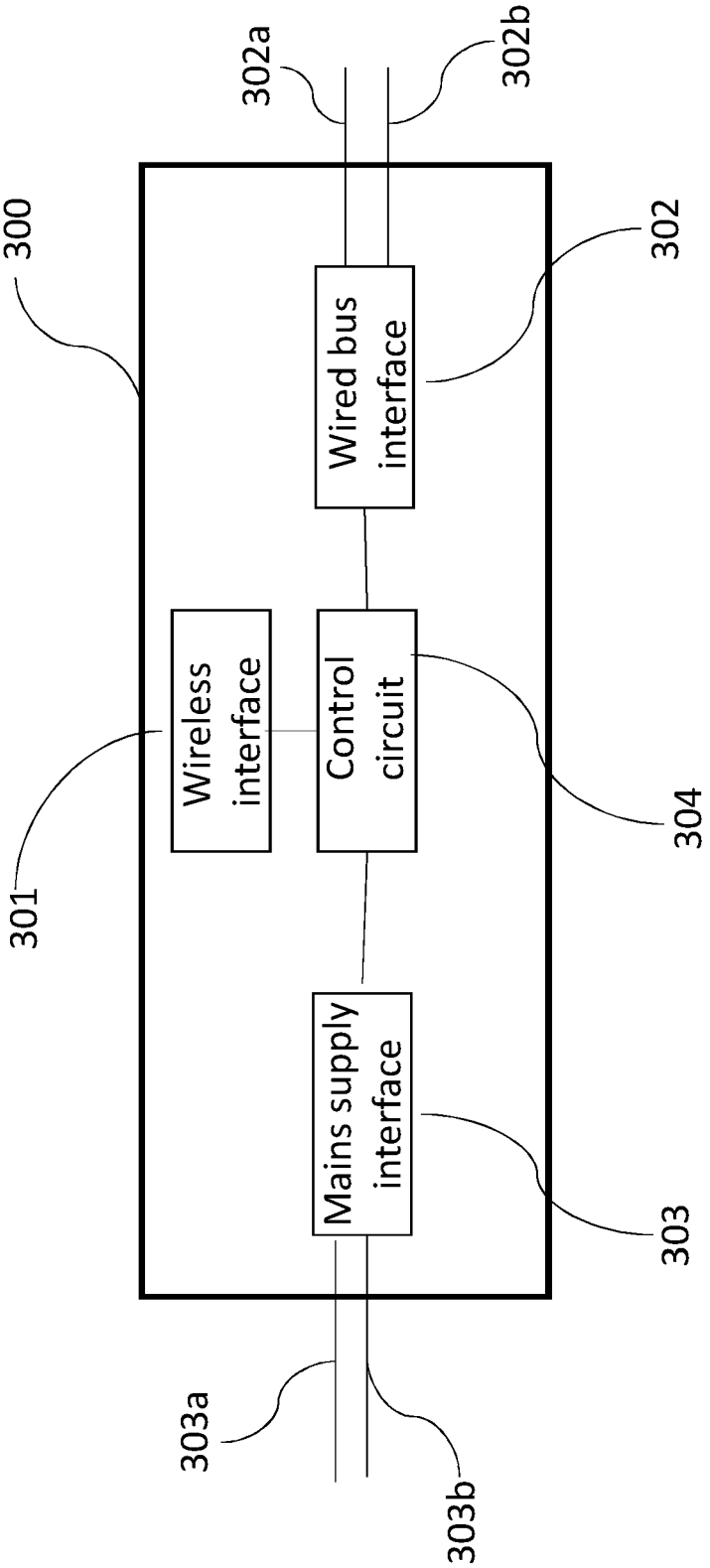
300
302a
302b
302
Wired bus interface
Wireless interface
Control circuit
301
304
Mains supply interface
303
303a
303b

Fig. 3

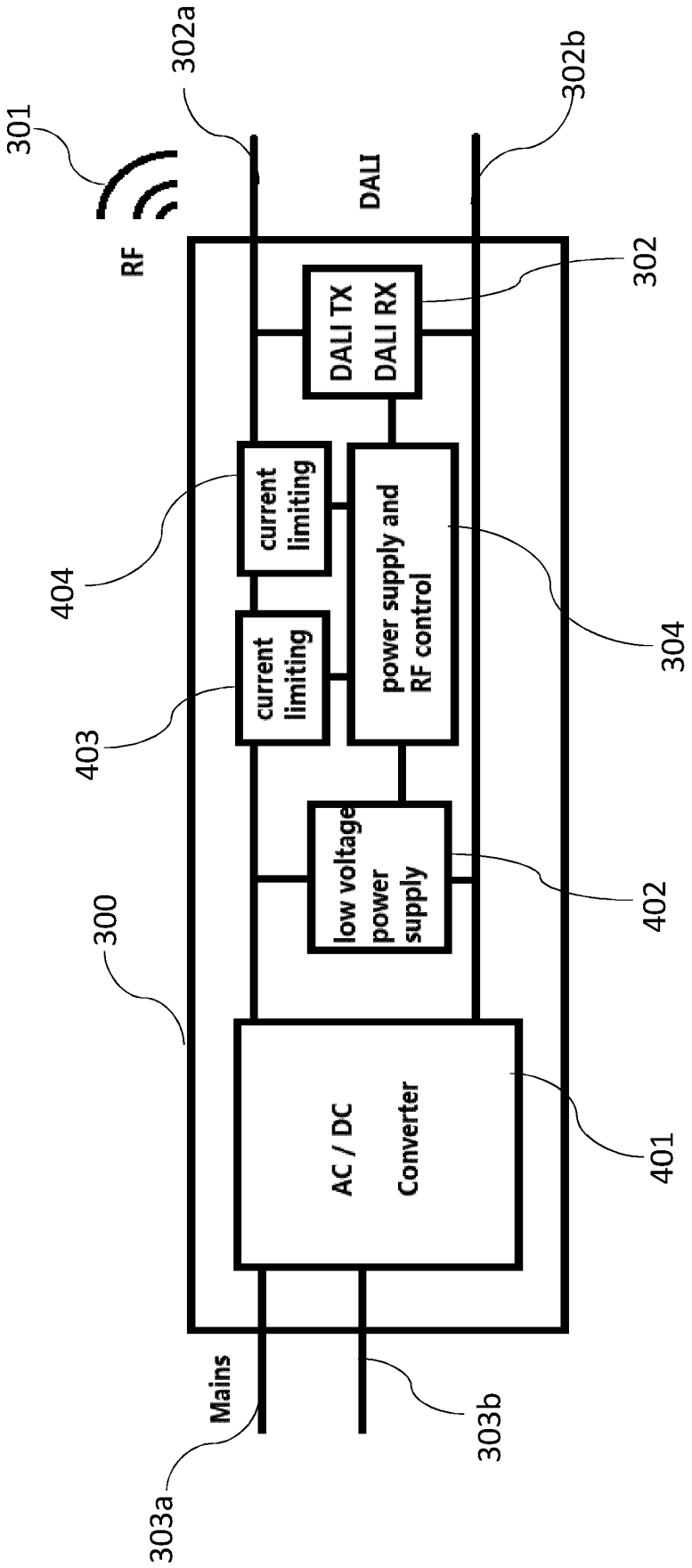
301
RF
302a
DALI
302b
DALI TX
DALI RX
302
current limiting
current limiting
power supply and RF control
404
403
304
low voltage power supply
402
300
AC / DC Converter
401
Mains
303a
303b

Fig. 4

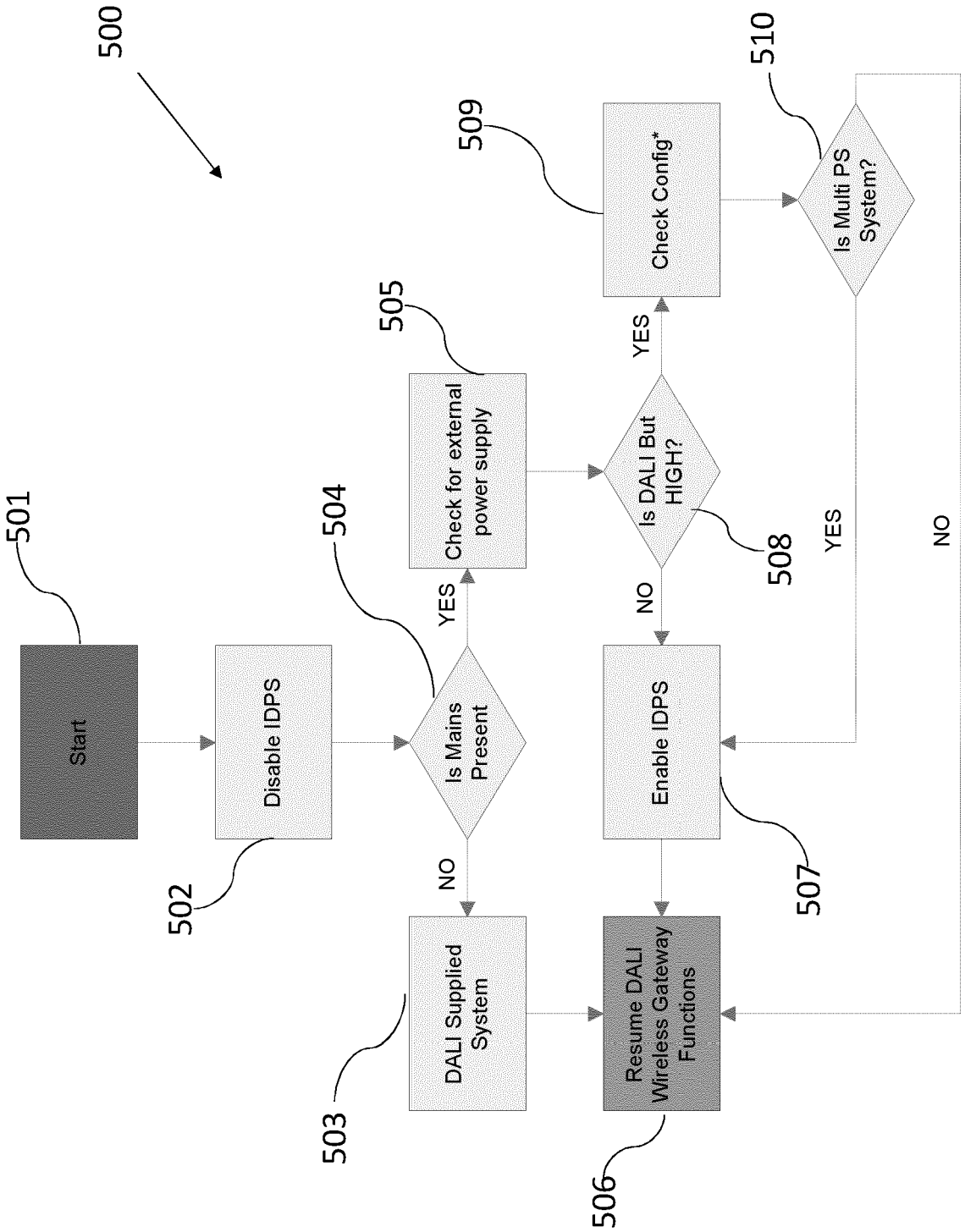
500
501
Start
502
Disable IDPS
504
Is Mains Present
YES
NO
503
DALI Supplied System
505
Check for external power supply
Is DALI But HIGH?
508
YES
NO
509
Check Config*
510
Is Multi PS System?
YES
NO
507
Enable IDPS
506
Resume DALI Wireless Gateway Functions

Fig. 5

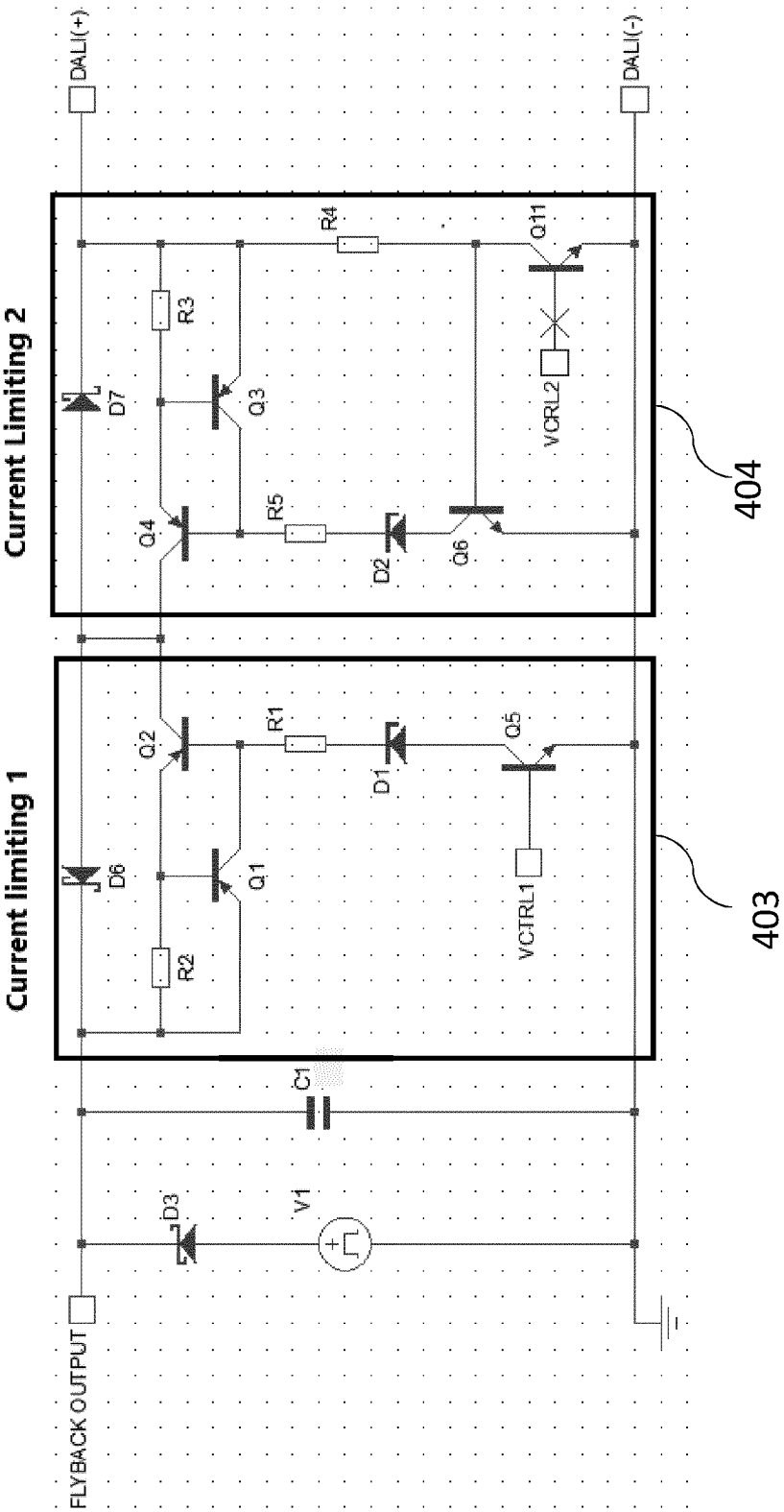
Current Limiting 2
Current limiting 1
DALI(+)
DALI(-)
FLYBACK OUTPUT
D7
R3
Q3
R4
Q11
VCRL2
Q4
R5
D2
Q6
404
Q2
R1
D1
Q5
D6
Q1
R2
VCTRL1
403
C1
D3
V1

Fig. 6

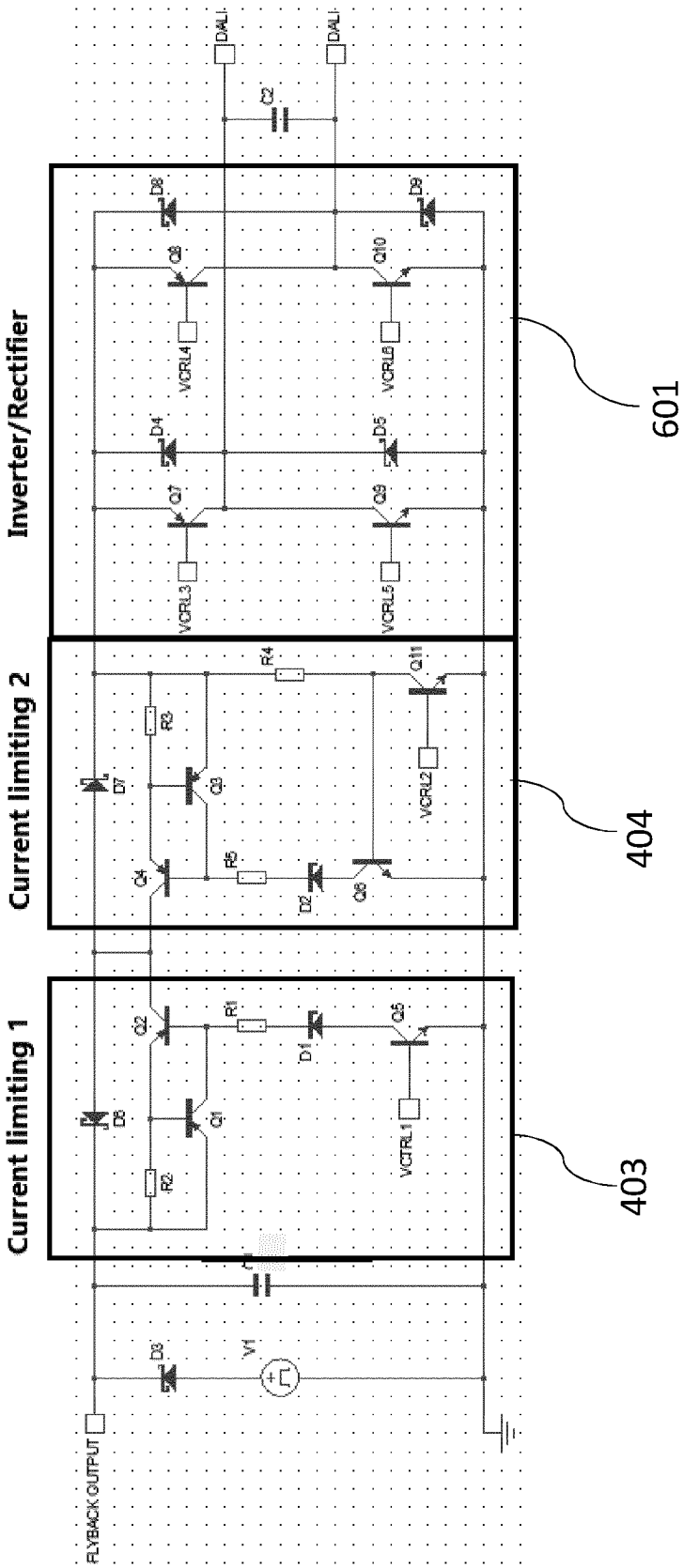
Current limiting 1
Current limiting 2
Inverter/Rectifier
FLYBACK OUTPUT
DALI
DALI
VCTRL1
VCRL2
VCRL3
VCRL4
VCRL5
VCRL6
403
404
601

Fig. 7

REFERENCES CITED IN THE DESCRIPTION

This list of references cited by the applicant is for the reader's convenience only. It does not form part of the European patent document. Even though great care has been taken in compiling the references, errors or omissions cannot be excluded and the EPO disclaims all liability in this regard.

Patent documents cited in the description

- WO 2020194355 A1 **[0007]**
- GB 2554987 A **[0007]**