Sept. 19, 1939. E. C. SAMPLE 2,173,429

ANTIFLAP SHADE HOLDER

Filed July 1, 1938

FIG. 1.

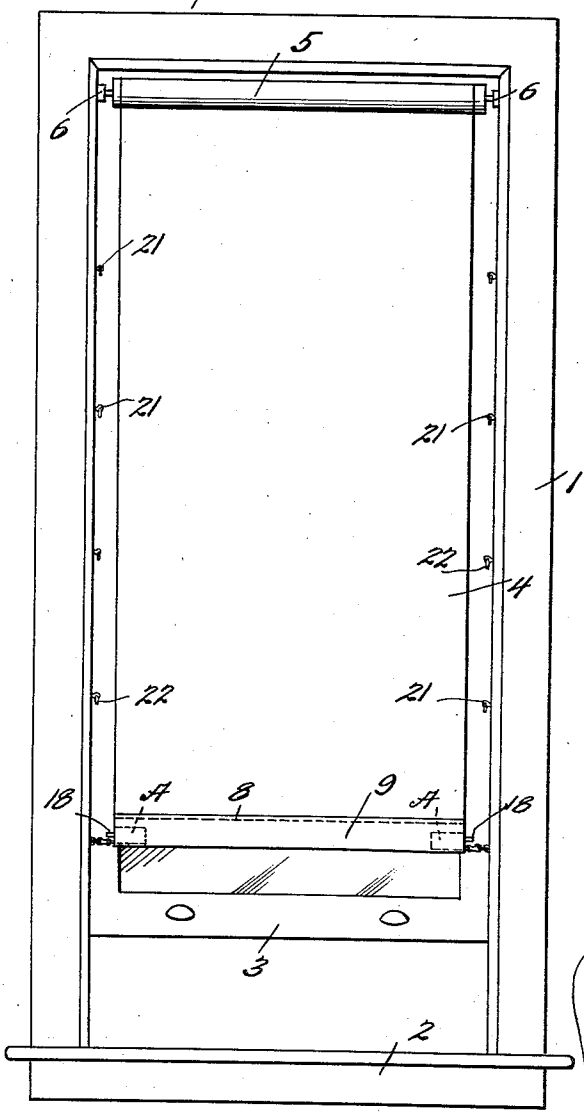

FIG. 2.

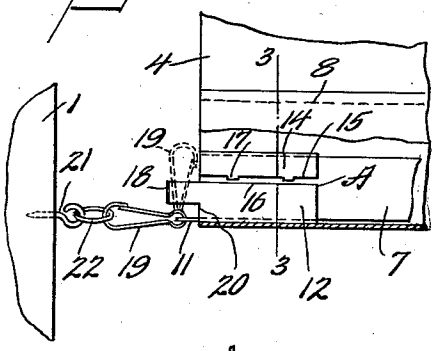

FIG. 3.

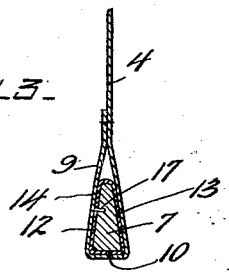

FIG. 4.

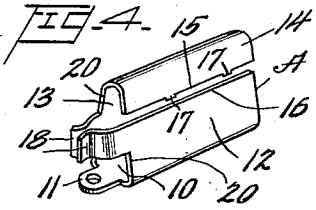

FIG. 6.

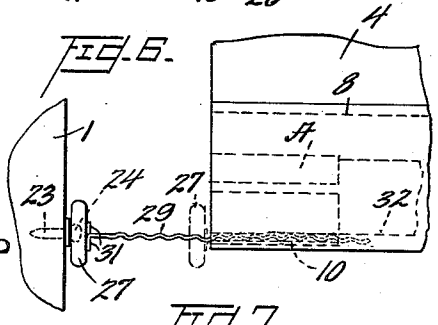

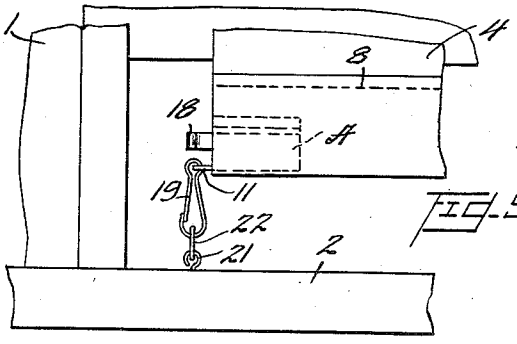

FIG. 5.

FIG. 7.

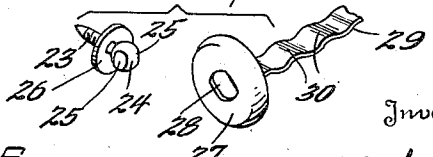

Inventor

Edwin C. Sample

By

Strauss, Crowe & Gordon

Attorney

Patented Sept. 19, 1939 2,173,429

UNITED STATES PATENT OFFICE

2,173,429

ANTIFLAP SHADE HOLDER

Elwin C. Sample, Lakeland, Fla.

Application July 1, 1938, Serial No. 217,031

5 Claims. (Cl. 156—33)

Generically this invention relates to a fastening means, but it is more especially directed to a means for detachably securing a shade to a window frame so as to prevent flapping of the shade when the window is in raised or open position.

One of the principal objects of this invention is the provision of an anti-flap window shade device carried by the shade and connected to the window frame at different points throughout its height to prevent flapping of the shade when the window is open to a predetermined extent.

Another important object of this invention is the provision of a shade or curtain holding device insertible over the ends of the foot stick intermediate its fabric covering and rigidly attachable thereto without removing the stick or marring the shade fabric, attachable to the window frame at predetermined points throughout its height and adapted to maintain the shade taut against the action of its spring to prevent flapping of the shade when the window is in open position.

Another important object of this invention is the provision of a shade holding device including a plurality of fastening means secured to the opposite sides of the window frame at selected heights, concealed sleeve means mounted on the ends of the foot stick to which it is adapted to be secured without disturbing the relationship of the shade and stick, and means normally carried by said sleeves in inoperative position but movable into operative engagement with selected fastening means carried by the frame to prevent flapping of the shade when the window is in open position.

Another important object of this invention is the provision of a shade holding device of this character attachable at selected heights with respect to the window frame, said attaching means constituting a flexible connection between the shade and frame so that the shade may be sufficiently adjusted to cause it to be held against the tension of its spring to prevent flapping thereof when the window is open.

A still further object of this invention is the provision of a shade holding device of this character adapted to be detachably and flexibly connected at predetermined selected heights to a window frame whereby limited variations in the width of the shade and types of frame may be compensated for and when the shade is attached, permitting sufficient initial movement of the shade to render the normal shade spring tension effective.

Another object of this invention is the provision of a concealed shade holding device of this character permitting the free end of the shade to be secured to the window frame or sill at the full length of the shade and out of its normal vertical plane, so that the shade may be used as a blind with the window open and at the same time permit air space for ventilation.

With these and other objects in view, which will become apparent as the description proceeds, the invention resides in the construction, combination and arrangement of parts, hereinafter more fully described and claimed, and illustrated in the accompanying drawing, in which like characters of reference indicate like parts throughout the several figures, of which

Fig. 1 is a side elevation of a window frame and shade with my improved shade holding device operatively applied thereto.

Fig. 2 is a fragmentary side elevation of Fig. 1 in a larger scale with the lower end of the shade in section.

Fig. 3 is a cross section taken on the line 3—3 of Fig. 2.

Fig. 4 is a perspective view of the holder or anchor sleeve.

Fig. 5 is a fragmentary side elevation showing the device secured to a window sill.

Fig. 6 is a side view of a modified form of shade holding device.

Fig. 7 is a perspective view of the engagable members of the device illustrated in Fig. 6.

The devices of this character with which I am familiar have proven deficient in many respects, some of which are, being incapable of attachment in some instances without removing the foot stick from the shade and in others the device being only attachable to the foot stick outside the shade fabric surrounding the stick thereby marring the shade and presenting an unsightly appearance, only operable if the shade is moved in an uninterrupted vertical plane, so connected that the action of the wind causes disengagement of the holding means, incapable of permitting the shade to be secured at full length and at the same time permit ventilation; and it was to overcome such deficiencies and to provide an anti-flap shade holding device comprising a sleeve member adapted to be inserted over the end of the foot stick and firmly secured thereto without removing the stick or marring the shade material, anchor means secured to the window frame at predetermined aligned points on opposite sides of the shade, and means associated with said sleeve and detachably engageable with cer-

tain selected anchor means thereby effecting a flexible connection between said shade and frame, whereby the normal shade roller spring tension may be rendered effective and the shade held against substantially longitudinal or lateral movement when the window is open, that I designed the shade holding device forming the subject matter of this invention.

In the illustrated embodiment characterizing this invention there is shown a window frame 1, sill 2, window 3, window shade 4, spring controlled shade roller 5, shade roller mounting 6, and foot stick 7. The lower end of the shade 4 is folded upon itself with its free end secured by stitching 8 or in any suitable manner forming a hem 9 in which said stick 7 is inserted, all of which is of conventional construction and shown for purposes of illustration.

Fig. 4 illustrates a split holder or anchor sleeve A having a bottom portion 10 formed with a perforated extension 11 and with its sides 12 and 13 tapering upwardly, said side 13 being formed with a bent over portion 14 adapted to extend over the upper or thin edge of stick 7 and with its free end 15 terminating adjacent the upper edge 16 of side 12. The edge 15 of portion 14 is formed with inwardly projecting brads 17. The sides 12 and 13 are formed with aligned complemental spring clip members 18 extending upwardly above perforated extension 11, in which latter a spring snap hook is suitably mounted. The sleeve member or element A is adapted to be inserted over each end of stick 7 intermediate the walls of said hem 9 and stick 7 without disturbing either the stick or material of said hem, preferably so that the end edges 20 will be flush with the end of the shade and stick, and rigidly attached to the stick by simply pressing on the material of the hem overlying the edge 15 of upper section 14 thereby embedding the brads in the stick.

A series of threaded eye screws 21 carrying rings 22 are mounted in frame 1 at predetermined spaced points adjacent the opposite sides of shade 4 in horizontal alignment so that hooks 19 may be brought into engagement with any selected pair of rings 22 to hold the lower end of the shade substantially rigid and prevent flapping of the shade when the window is open, as will be hereinafter more fully explained.

The eye screws 21 with rings 22 in addition to being mounted in frame 1 (Fig. 2) may also be mounted in the sill 2 (Fig. 5) for a purpose directly appearing.

A modified form of shade holder device similar to that above described, except employing a different attaching means, is illustrated in Figs. 6 and 7.

In this form is included a threaded anchor pin 23 having a round end with slightly flattened faces 25 on opposite sides, and firmly mounted on said pin adjacent head 24 secured in any suitable manner is a washer or contacting face plate 26 against which is adapted to seat a complemental hollowed out head member 27 in the outer face of which is formed a slot opening 28 adapted to receive said head 24 of anchor pin 23 as will directly more fully appear.

A flexible steel strip body portion 29 having substantially throughout its length a crimped formation 30, and, in the present instance, having its end slit and bent in opposite directions to form the oppositely extending portions 31 which are welded, soldered or otherwise suitably secured to head 27 as will be clear without further description. Also in this form sleeve A mounted as previously described may be utilized or a similar sleeve minus members 11 and 18 may be used if desired. The strip 29 is adapted to be inserted intermediate the lower edge 32 of foot stick 7 and the bottom portion 10, as shown in Fig. 6, and while said strip is slidable with respect to the sleeve, the crimped formation tends to prevent disengagement of the strip and, especially with respect to the vertical or lateral movement of the shade, when head 27 is in operative engagement with head 24 of anchor pin 23, as shown in Fig. 6. It is obvious that the bottom 10 of sleeve A and/or the bottom surface of foot stick 7 may be formed with a crimp-like formation similar to strip 27 to form therewith a more pronounced locking engagement if desired, without departing from the spirit or scope of the instant invention.

It will also be noted in this connection that strip 29 carrying head 27 is adapted to form a flexible connection between shade 4 and frame 1 when operatively engaged with pin 23. By reason of the flexibility of strip 29, head 27 may be turned sufficiently to align slot 28 with faces 25 of head 24 to permit insertion of the latter therein, and when the twisting or turning force is removed said head 27 will return to the position shown in Fig. 7, and disengagement of member 27 from head 24 will be prevented, on account of slot 28 normally extending at an angle with respect to said strip and the faces of said head 24.

The operation of the device would seem to be clear from the above description, but it might be well to further state in connection with the preferred form of the device that when not in use, snap hooks 19 are pushed upward between members 18 where they are held, as shown in Fig. 2, out of the way and when it is desired to employ the shade or curtain as a shading medium or blind, it will be only necessary to move the respective hooks 19 from members 18 and bring them into operative engagement with rings 22, as clearly shown in Figs. 1 and 5, or at other selected points as desired.

When the hooks 19 at opposite sides of the shade are engaged with respective rings 22 a slightly inward and downward movement of foot or shade stick 7 will cause the spring tension of the roller 5 to become effective, and whereby the shade will be held taut and against flapping by the wind when the lower edge of window 3 is raised substantially above the lower end of the shade or otherwise opened in accordance with the particular type of window.

When it is desired to use the shade as a complete blind the hooks 19 are engaged with rings 22 anchored to the sill 2 as shown in Fig. 5, whereby the shade extends at an angle with respect to the window frame throughout its length and thereby providing an air space between the frame and shade for purposes of ventilation as will be well understood. All that is necessary to release the shade and return it to its normal raising and lowering position is to detach the snap fasteners 19 from rings 22 and again insert them between holder members 18 as in the first instance.

In connection with the modified form illustrated in Fig. 6, it will be noted that when the shade is normally unfastened the strips 29 are pushed in with heads 27 contacting the ends of sleeves A and, when it is desired to operatively secure the lower end of the shade as previously described, it is only necessary to pull out the strips

sufficiently to engage heads 21 with anchor pins 23 and which flexible connection is adapted to compensate for limited differences in the widths of window frames and shades, as will be well understood.

It is deemed advisable to state at this point that it is to be understood that wherever in the specification and claims reference is made to "shade", this expression is to be construed as embracing shade, curtain, flexible blind, and the like.

From the above description it will be apparent that I have designed a device adapted to secure the lower end of a window shade to the window frame in a manner to prevent flapping of the shade when the window is open, having a flexible detachable connection with the frame, adapted to be substantially concealed, installable without disturbing the shade or stick carried thereby, secured to the stick without marring the shade material, having a sleeve portion adapted to be stamped out of sheet metal, said device being simple in construction, easily installable, presenting a neat appearance, manufacturable at a minimum cost, and efficient for the purposes intended.

Although in practice I have found that the forms of my invention illustrated in the accompanying drawing and referred to in the above description as the preferred embodiments is the most efficient and practical, yet realizing the conditions concurrent with the adoption of my invention will necessarily vary, I desire to emphasize that various minor changes in details of construction, proportion and arrangement of parts may be resorted to within the scope of the appended claims without departing from or sacrificing any of the principles of this invention.

While the series of eye screws 21 are usually mounted in vertically spaced alignment it is to be understood that with respect to different types of window frames and in accordance with particular operating requirements, they, or certain of them, may be mounted out of their normal vertical plane, as desired, and in addition to mounting them as illustrated in Fig. 5 of the drawing.

Having thus described my invention, what I desire protected by Letters Patent is as set forth in the following claims:

1. The combination with a spring controlled shade carried by a window frame and having a foot stick mounted in its free end, of a shade holding device including a plurality of anchor means secured to opposite sides of the window frame in vertically spaced relation, concealed sleeve means mounted on the ends of said foot stick and adapted to be secured to the stick without disturbing the relation of the shade and stick, means normally carried by said sleeves in inoperative position but movable to effect flexible connection with selected anchor means carried by the frame, said connection permitting sufficient initial movement of the shade to render its spring tension effective, and preventing flapping of the shade when the window is open.

2. A holder device for a window shade having a foot stick at one end, including a sleeve member insertible over each end of said stick intermediate its covering, said sleeve having means adapted to effect rigid connection of the sleeve with the stick while in concealed position without disturbing or moving said covering, detachable connecting means carried by each of said sleeves, additional means for detachably securing the connecting means in inoperative position, and anchor means connected to the window frame, said connecting means being movable into detachable connection with said anchor means, whereby when the window is open substantial flapping of said shade is prevented.

3. A holder device for a window shade having a foot stick at one end, including a sleeve member insertible over each end of said stick intermediate its covering, said sleeve adapted to be rigidly connected to said stick, anchor means connected to opposite sides of the window frame, a flexible means slidably insertible intermediate the bottom of the stick and sleeve and means carried by said slidable means for detachable engagement with said anchor means, whereby when the window is open substantial flapping of said shade is prevented.

4. A holder device for a window shade having a foot stick at one end, including a sleeve member insertible over each end of said stick intermediate its covering, each of said sleeves adapted to be rigidly connected to the stick while in concealed position without marring said covering, a plurality of anchor means connected to opposite sides of the window frame, a flexible means slidably insertible intermediate the bottom of the stick and the sleeve, said flexible means having means normally tending to prevent disengagement of said means from said sleeve.

5. A holder device for a spring controlled window shade having a foot stick mounted in its free end, including substantially concealed holder means connected to the ends of said foot stick, series of anchor means adapted to be connected to the window frame at opposite sides of said shade and at points out of the normal vertical plane of the shade, and means carried by said holder means for effecting detachable and flexible connection with selected anchor means of said series, whereby substantial flapping of the shade when the window is open is prevented and additional air space between the shade and frame for ventilation is effected.

ELWIN C. SAMPLE.