June 13, 1950 W. A. BEAUCHAMP 2,511,425

CAR DOOR FASTENER

Filed Aug. 2, 1946 5 Sheets-Sheet 1

FIG-1

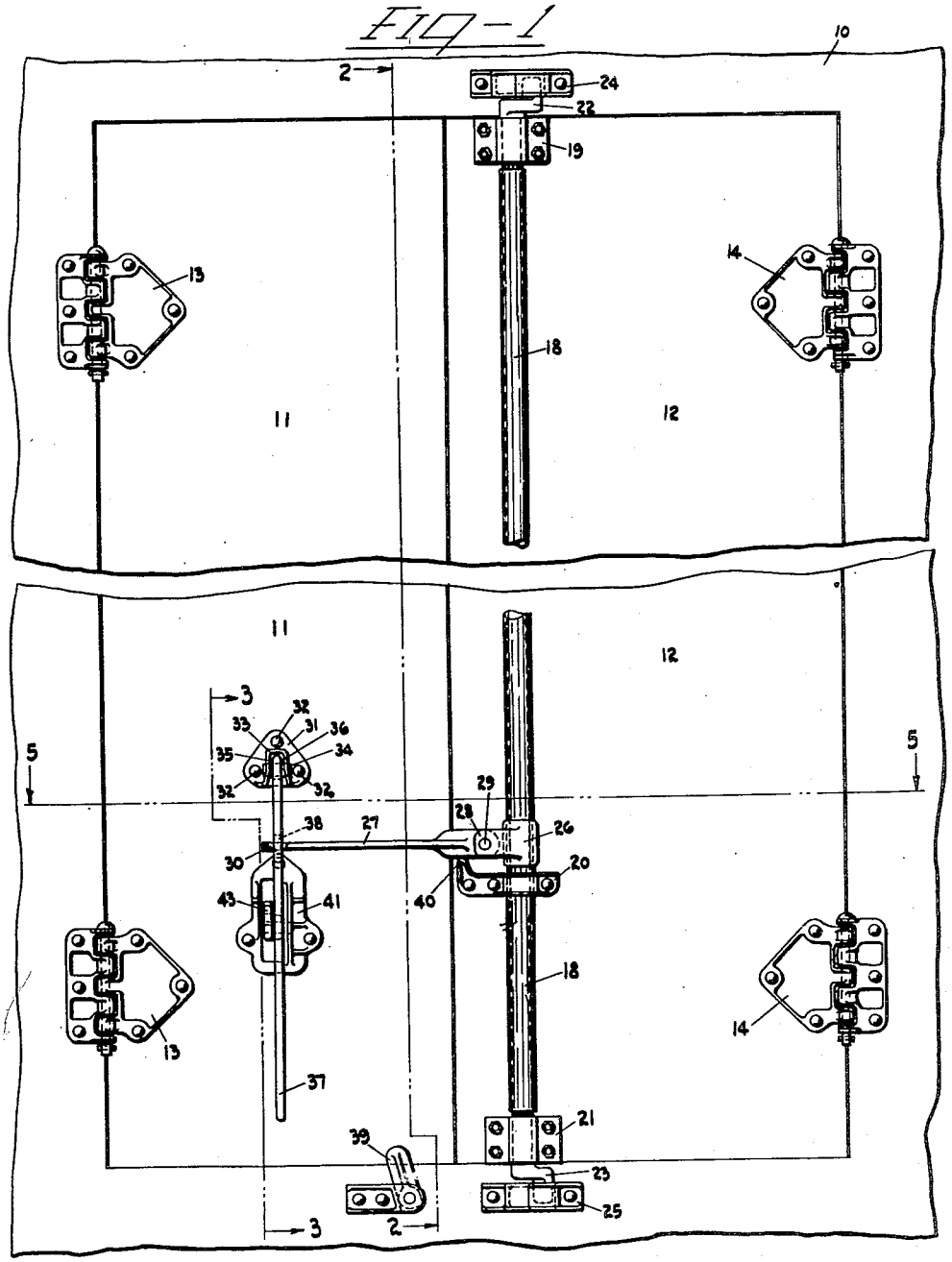

~ INVENTOR ~

WILFRED A. BEAUCHAMP

BY Samuel Reese

ATTY.

June 13, 1950 W. A. BEAUCHAMP 2,511,425

CAR DOOR FASTENER

Filed Aug. 2, 1946 5 Sheets-Sheet 2

FIG-2

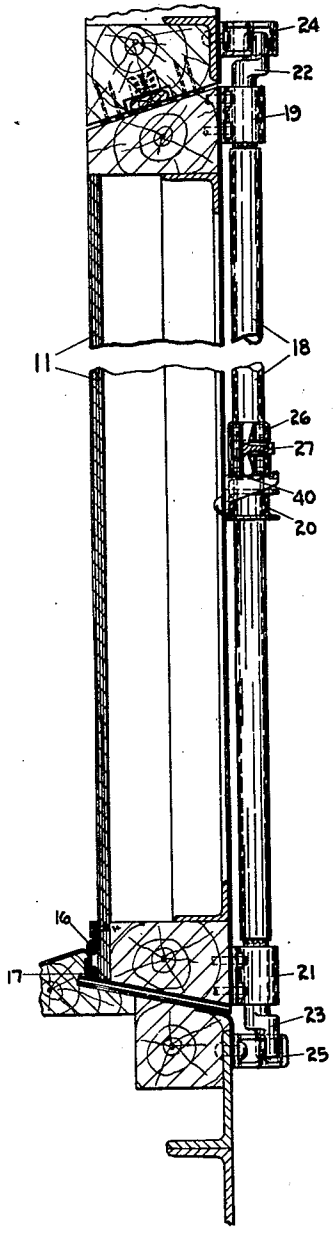

FIG-3

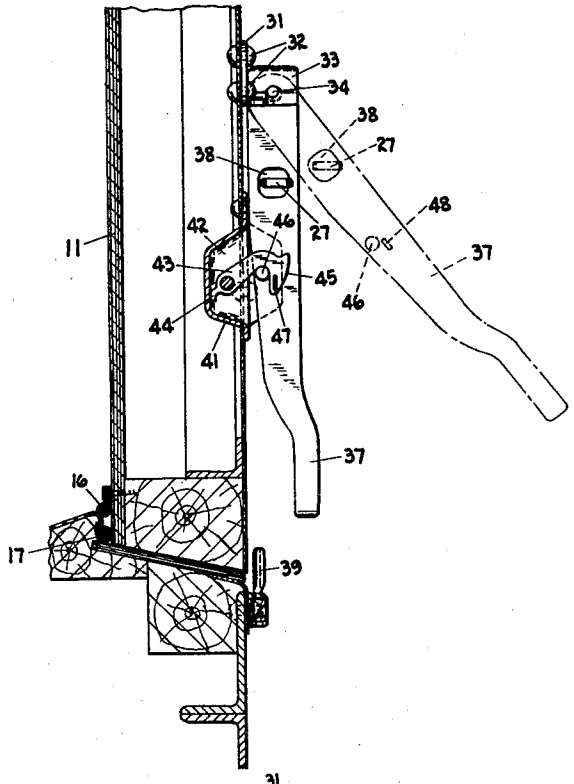

FIG-4

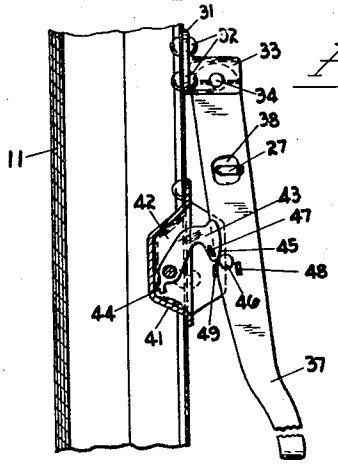

-INVENTOR-

WILFRED A. BEAUCHAMP

BY Samuel Reece

ATTY.

June 13, 1950 W. A. BEAUCHAMP 2,511,425

CAR DOOR FASTENER

Filed Aug. 2, 1946 5 Sheets-Sheet 3

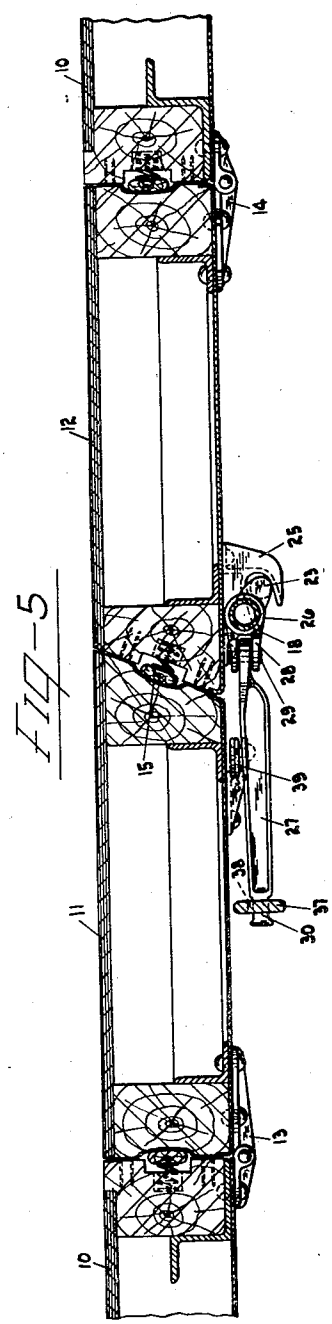

FIG-5

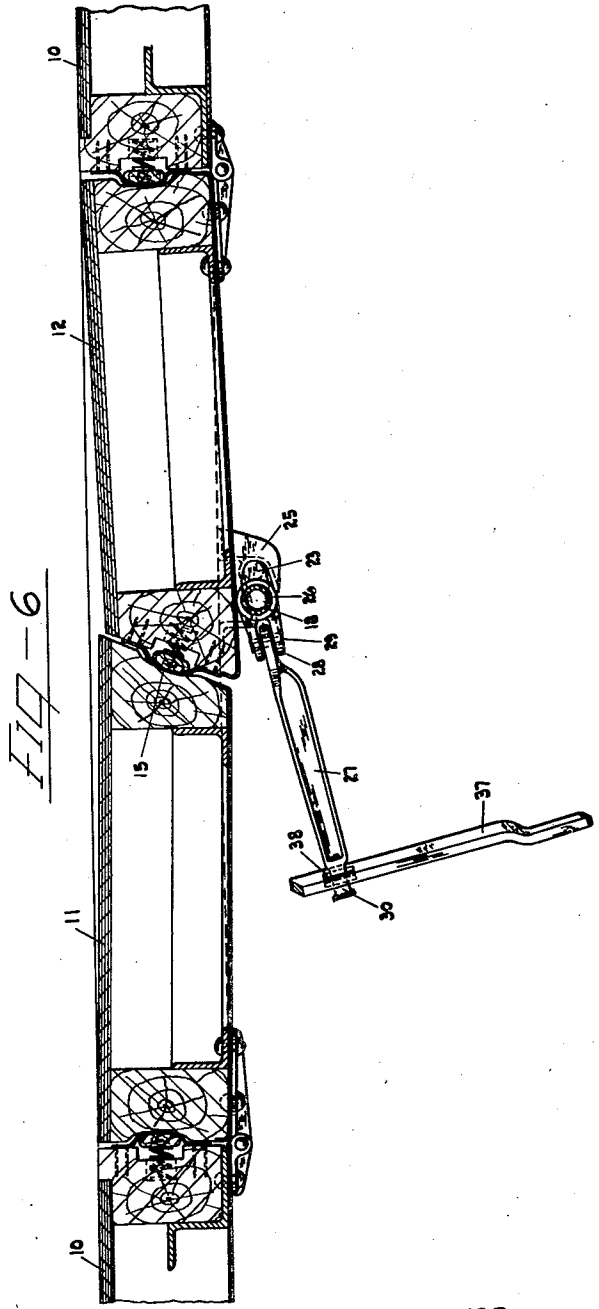

FIG-6

- INVENTOR -
WILFRED A. BEAUCHAMP
BY Samuel Reese
ATTY.

June 13, 1950 W. A. BEAUCHAMP 2,511,425

CAR DOOR FASTENER

Filed Aug. 2, 1946 5 Sheets-Sheet 4

FIG- 7

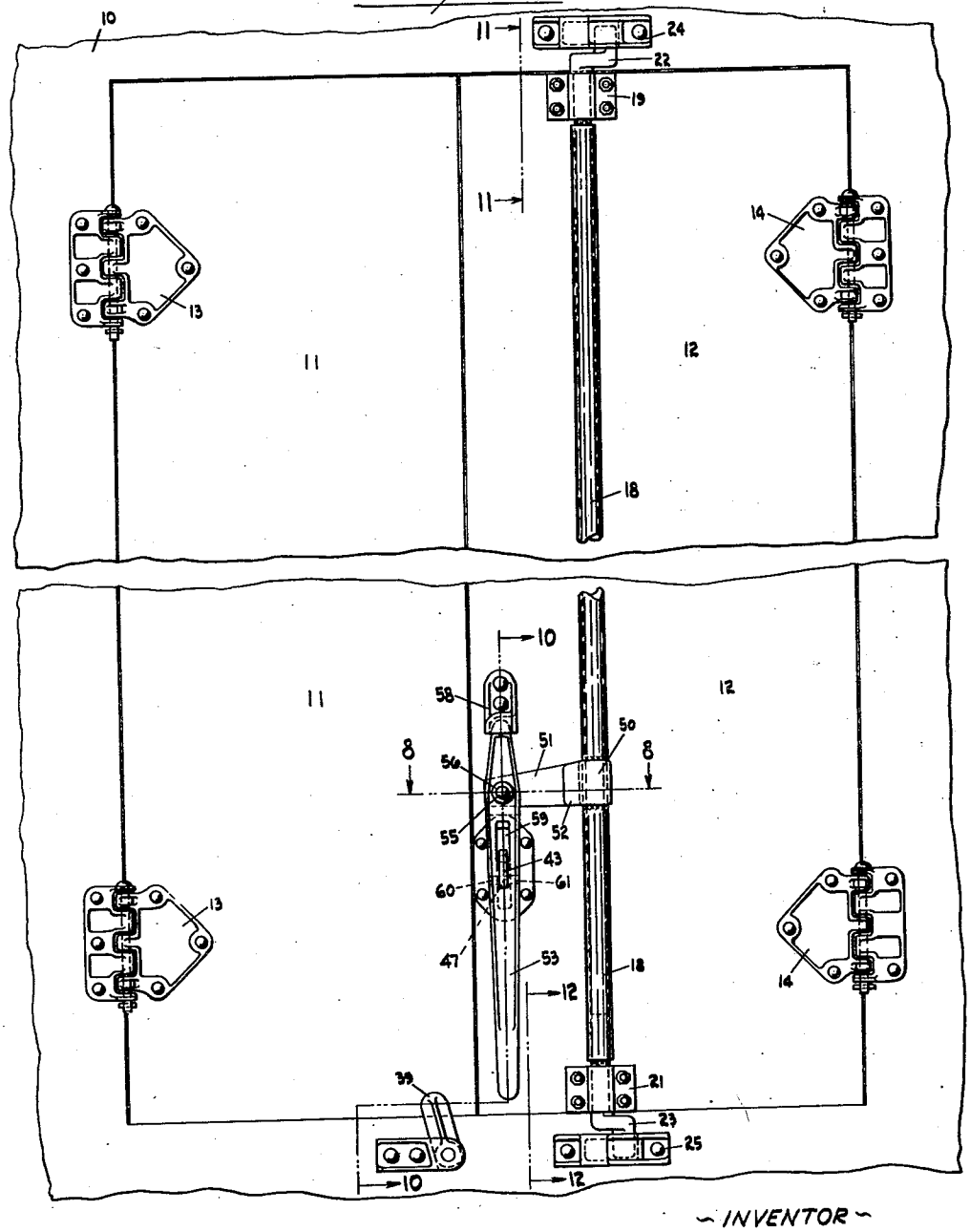

INVENTOR

WILFRED A. BEAUCHAMP

BY Samuel Reese

ATTY.

June 13, 1950 W. A. BEAUCHAMP 2,511,425

CAR DOOR FASTENER

Filed Aug. 2, 1946 5 Sheets-Sheet 5

FIG-10

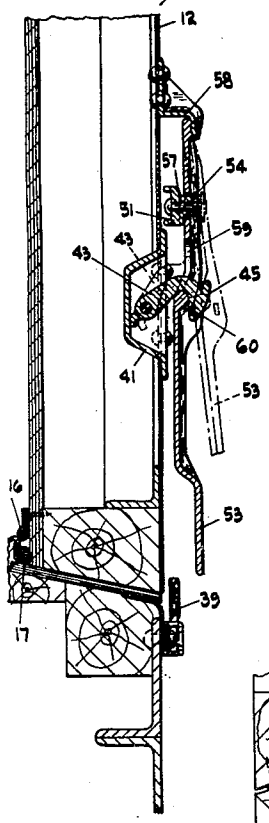

FIG-8

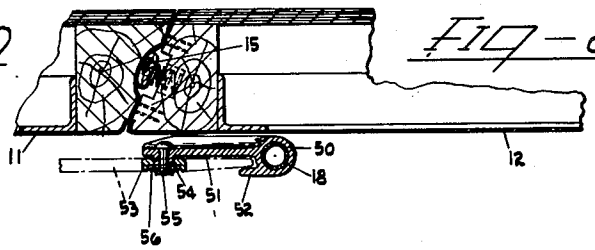

FIG-9

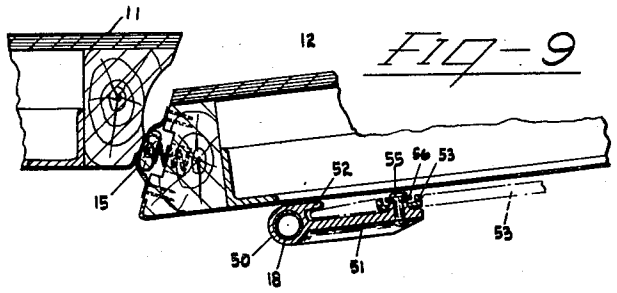

FIG-11

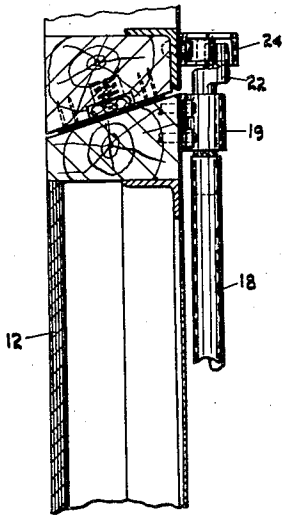

FIG-12

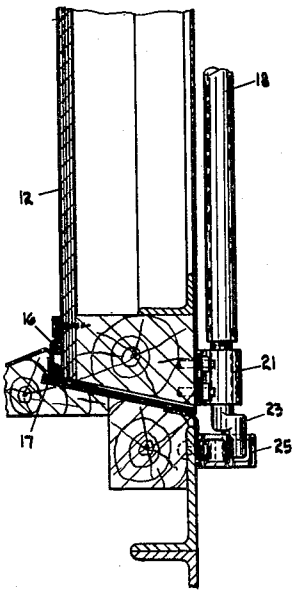

~ INVENTOR ~

WILFRED A. BEAUCHAMP

BY Samuel Reese

ATTY.

Patented June 13, 1950 2,511,425

UNITED STATES PATENT OFFICE

2,511,425

CAR DOOR FASTENER

Wilfred A. Beauchamp, Chicago, Ill., assignor to The Youngstown Steel Door Company, Cleveland, Ohio, a corporation of Ohio

Application August 2, 1946, Serial No. 688,108

20 Claims. (Cl. 292—218)

1

This invention relates to refrigerator car doors and is directed more particularly to swinging doors of the kind indicated and especially to the mechanism for forcing the doors into the door opening and for locking the doors in said position.

It is an object of this invention to provide mechanism for swinging refrigerator car doors which shall substantially facilitate the positioning of said doors in their door openings.

A further object is to provide mechanism for swinging refrigerator car doors capable of easily seating the doors in their door openings, and with equal facility both from the ground and from platforms.

Other objects of the invention will become clear as the description thereof proceeds.

In the drawings forming part of this specification:

Fig. 1 is an elevation of a pair of swinging refrigerator car doors equipped with mechanism embodying one form of the invention.

Fig. 2 is a vertical section taken on line 2—2 of Fig. 1.

Fig. 3 is a vertical section taken on line 3—3 of Fig. 1 and illustrating in dot and dash lines the position of the lever when the door has been forced out of the door opening.

Fig. 4 is a view similar to Fig. 3 showing the manner of automatically locking the lever when the door has been forced into the door opening.

Fig. 5 is a horizontal section taken on line 5—5 of Fig. 1.

Fig. 6 is a view similar to Fig. 5 showing the association and operation of the mechanism when the door is forced out of the door opening.

Fig. 7 is an elevation of a pair of swinging refrigerator car doors equipped with mechanism embodying another form of the instant invention.

Fig. 8 is a horizontal section taken on line 8—8 of Fig. 7.

Fig. 9 is a view similar to Fig. 8 showing the position of the mechanism after the door to which it is applied has been partly opened.

Fig. 10 is a vertical section taken on line 10—10 of Fig. 7.

Fig. 11 is a vertical section taken on line 11—11 of Fig. 7.

Fig. 12 is a vertical section taken on line 12—12 of Fig. 7.

Referring first to the form of the invention

2

illustrated in Figures 1 to 6, inclusive, the reference numeral 10 designates a portion of a side wall of a railway refrigerator car. As is customary, the side wall is formed with a door opening which is usually closed by a pair of swinging doors 11 and 12 respectively hinged as by means of hinges 13—13 and 14—14 to the side wall of the car. The meeting edges of the doors are sloped, as clearly shown in Fig. 5, and so related that the edge of the right hand door 12 overlaps the edge of left hand door 11. The joint between the meeting edges of the doors is weatherstripped by means of the well known spring-pressed La Flare packing 15 which, as shown, is carried by door 12. The top and hinged edges of the doors are similarly weatherstripped, as shown in Figs. 2 and 5. The lower portion of each of the doors is weatherstripped by means of the compressible strips 16 and 17, as more clearly shown in Fig. 2 of the drawings.

A vertical bar 18, shown in the form of a pipe is mounted upon door 12 for rotation about its axis by means of a plurality of bearings 19, 20 and 21. The ends of bar 18 are provided with cranks 22 and 23 which are adapted to enter and leave keepers 24 and 25 fastened to the car side above and below the door opening, and to cooperate therewith to force the doors into and out of the door opening. As will be readily apparent, the movement of the doors into the door opening so as to lie flush with the car side must be accomplished against the substantial resistance offered by the plurality of springs of the La Flare packing and the weatherstrips 16 and 17.

To this end a clevis 26 is fastened upon bar 18, as by means of welding, so as to rotate therewith. A lever 27 is pivotally secured for vertical swinging movement within the jaw 28 formed on the collar by means of a pin 29. The free end of the lever is preferably reduced in width as shown at 30.

A bracket 31 is secured to door 11 as by means of rivets 32. Bracket 31 embodies an inverted channel-shaped portion 33 across which extends a pin 34 whose ends are supported in the vertical walls 35 and 36 of said portion. A vertical lever 37 is suspended from pin 34 so as to permit the free end of lever 27 to be received within an opening 38 in lever 37 for the purpose hereinafter explained.

When the doors are open lever 27 will be suspended vertically from pin 29 on the right of bar 18 and vertical lever 37 will be suspended from pin 34. In the closing operation door 11 will be swung around its hinges 13—13 into the door opening until the hinged edge thereof contacts the adjacent La Flare packing. The pivoted stop 39 is then raised across the lower edge of door 11 so that it cannot accidentally swing open. Door 12 is then swung about hinges 14—14 into the door opening until the hinged edge thereof contacts the adjacent La Flare packing and its free edge overlaps the free edge of door 11. Lever 27 is then raised to a horizontal position and swung toward door 11 thereby rotating bar 18 about its axis and causing the ends of cranks 22 and 23 to enter the keepers 24 and 25. Lever 27 may then be supported upon a ledge 40 preferably formed integral with bearing 20.

To complete the closing movement of both doors with ease the reduced end of lever 27 is passed thru opening 38 in lever 37 which is then pressed toward door 11. In this manner a far greater leverage is exerted upon bar 18 and cranks 22 and 23 than could be exerted by a force applied by hand directly to the end of lever 27, and doors 11 and 12 are easily closed against the resistance offered by the weatherstrips through the cooperation of the cranks and their keepers.

By pulling lever 37 away from door 11 when the doors are closed a similar large leverage acting thru the cranks and their keepers easily forces door 12 from the door opening and permits full opening of both doors.

To maintain the doors in closed position against the pressure of the weatherstrips automatic locking means is provided. In the form shown, the locking means embodies a bracket 41 secured in a recess 42 in door 11 so as to lie flush therewith. A vertically disposed catch 43 is pivotally mounted in bracket 41 and projects outwardly therefrom. Downward movement of the catch is limited by a lug 44 formed on the pivoted end of the catch which contacts the bracket for this purpose as shown in Fig. 3. The outer end of the catch is rounded as shown at 45 so that the catch will automatically be raised when this end is engaged by a pin 46 formed on lever 37.

Thus, after the end of lever 27 is received in opening 38 of lever 37 in the closing movement of the doors and lever 37 is pressed toward door 11 pin 46 will toward the end of this movement engage the rounded end 45 of catch 43 and raise the latter so that it can engage over pin 46 and lock lever 37. The doors are now securely held in closed position. A seal (not shown) may then be threaded thru alined openings 47, 48 and 49 formed in the catch, lever and bracket 41, respectively.

In the form of the invention shown in Figs. 7–12, inclusive, a collar 50 is rigidly secured to bar 18, as by means of welding. Integral with the collar are an arm 51 and a shorter arm 52 spaced from arm 51. A lever 53 is pivoted intermediate its ends upon a boss 54 integral with arm 51 and is retained thereon by means of a rivet 55 passing thru the arm, boss and lever and by a washer 56. The opening in the lever thru which the boss passes is larger than the boss and the clearance thus provided together with the upward and rearward slope 57 of the arm above the boss permits lever 53 to be tipped in a plane substantially at right angles to arm 51 as shown in Fig. 10.

When the doors are open lever 53 is suspended vertically from arm 51 at the right of bar 18. To close the doors after they have been swung into overlapping relationship, as hereinbefore explained, lever 53 is swung to the horizontal position shown in dot and dash lines in Fig. 8 of the drawings so that the upper end thereof is received between the arms 51 and 52. The lever is then swung toward door 11 so as to rotate bar 18 and cause the ends of cranks 22 and 23 to enter keepers 24 and 25. Lever 53 is then swung to the vertical position and tipped so that the upper end may be swung under bracket 58 secured to door 12. With bracket 58 serving as a fulcrum a force is applied to the lower end of the lever and through it to the outer end of arm 51. These forces produce axial rotation of bar 18 in the brackets 19, 20 and 21 and rotation of the cranks 22 and 23, which by their engagement with the keepers 24 and 25 force the doors into the door opening against the resistance of the weatherstrips.

Door 12 may be forced from the door opening through the coaction of the cranks and keepers by pulling the lower end of lever 53 outwardly so as to impart rotation to bar 18 in the opposite direction. Lever 53 is then swung to a horizontal position between arms 51 and 52 and counterclockwise to release the cranks from the keepers so that the door may be fully opened. Door 11 may then be opened readily.

The operation of lever 53 to force the doors to closed position is utilized to lock the doors in said position. For this purpose lever 53 is formed with an opening 59 and a rounded portion 60 at the lower edge of the opening, and is adapted to cooperate with bracket 41 and catch 43, heretofore described, to automatically lock the doors in closed position. During the movement of lever 53 toward the door the rounded portion 60 will contact the rounded outer end 45 of the catch and raise the catch. As the movement of the lever continues the catch is projected through the opening 59 in the lever and drops over the rounded portion 60 thereby locking the lever and the doors. A seal (not shown) is then threaded opening 47 in the catch and alined opening 60 and 61 formed in lever 53.

It will be apparent that numerous changes and modifications in the details of the invention will be clear to those skilled in the art. It is intended, therefore, that all such changes and modifications be comprehended within this invention, which is to be limited only by the scope of the claims appended hereto.

I claim:

1. In a fastening device for a pair of swinging doors one of which overlaps the other, said fastening device embodying a vertical bar rotatably mounted on the overlapping door and having crank ends adapted to be releasably engaged with keepers disposed respectively above and below the doors, means secured to said bar, said means being swingable horizontally to impart rotation to said bar, means secured to one of said doors, and a lever pivotally secured to one of said means for vertical swinging movement and releasable engagement with the other of said means, said lever extending below said first mentioned means and being operable to impart horizontal swinging movement to said first mentioned means and rotation to said bar.

2. In a fastening device for a pair of swinging doors one of which overlaps the other, said fastening device embodying a vertical bar rotatably mounted on the overlapping door and

having crank ends adapted to be releasably engaged with keepers disposed respectively above and below the doors, means secured to said bar, said means being swingable horizontally to impart rotation to said bar, means secured to one of said doors, and a lever pivotally secured to one of said means for vertical swinging movement and releasable engagement with the other of said means, said lever extending below said first mentioned means and being operable to impart horizontal swinging movement to said first mentioned means and rotation to said bar, and means on one of said doors engaging and automatically locking said vertically swinging lever.

3. In a fastening device for a pair of swinging doors one of which overlaps the other, said fastening device embodying a vertical bar rotatably mounted on the overlapping door and having crank ends adapted to be releasably engaged with keepers disposed respectively above and below the door, means secured to said bar, said means being swingable horizontally to impart rotation to said bar, a lever pivotally mounted on one of said doors for vertical swinging movement, said lever being formed with a hole therethrough, the end of said means being adapted to releasably extend through the hole in said lever, said lever extending below said means and being swingable vertically to impart horizontal swinging movement to said means and rotation to said bar.

4. In a fastening device for a pair of swinging doors one of which overlaps the other, said fastening device embodying a vertical bar rotatably mounted on the overlapping door and having crank ends adapted to be releasably engaged with keepers disposed respectively above and below the doors, means pivotally suspended from said bar, said means being swingable horizontally to impart rotation to said bar, a lever pivotally mounted on one of said doors for vertical swinging movement, said lever being formed with a hole therethrough, the end of said means being adapted to releasably extend through the hole in said lever, said lever extending below said means and being swingable vertically to impart horizontal swinging movement to said means and rotation to said bar.

5. In a fastening device for a pair of swinging doors one of which overlaps the other, said fastening device embodying a vertical bar rotatably mounted on the overlapping door and having crank ends adapted to be releasably engaged with keepers disposed respectively above and below the doors, means pivotally suspended from said bar, said means being swingable horizontally to impart rotation to said bar, a lever pivotally mounted on one of said doors for vertical swinging movement, said lever being formed with a hole therethrough, the end of said means being adapted to releasably extend through the hole in said lever, said lever extending below said means and being swingable vertically to impart horizontal swinging movement to said means and rotation to said bar, and means on said overlapping door for supporting said means in position for extension into the opening in said lever.

6. In a fastening device for a pair of swinging doors one of which overlaps the other, said fastening device embodying a vertical bar rotatably mounted on the overlapping door and having crank ends adapted to be releasably engaged with keepers disposed respectively above and below the doors, means pivotally suspended from said bar, said means being swingable horizontally to impart rotation to said bar, a lever pivotally mounted on one of said doors for vertical swinging movement, said lever being formed with a hole therethrough, the end of said means being adapted to releasably extend through the hole in said lever, said lever extending below said means and being swingable vertically to impart horizontal swinging movement to said means and rotation to said bar, and means mounted on said one door for engaging and automatically locking said vertically swinging lever.

7. In a fastening device for a pair of swinging doors one of which overlaps the other, said fastening device embodying a vertical bar rotatably mounted on the overlapping door and having crank ends adapted to be releasably engaged with keepers disposed respectively above and below the doors, a horizontally disposed member rigidly secured to said bar, a lever pivotally mounted intermediate its ends on said member for vertical swinging movement, and a member secured to one of said doors, said latter member being engageable by the upper end of said lever, and said lever being swingable vertically to impart horizontal swinging movement to said first mentioned member and rotation to said bar.

8. In a fastening device for a pair of swinging doors one of which overlaps the other, said fastening device embodying a vertical bar rotatably mounted on the overlapping door and having crank ends adapted to be releasably engaged with keepers disposed respectively above and below the doors, means secured to said bar and swingable horizontally to impart rotation thereto, a lever pivotally mounted intermediate its ends on said means for vertical swinging movement, and a member secured to one of said doors, said latter member being engageable by the upper end of said lever, and said lever being swingable vertically to impart horizontal swinging movement to said means and rotation to said bar.

9. In a fastening device for a pair of swinging doors one of which overlaps the other, said fastening device embodying a vertical bar rotatably mounted on the overlapping door and having crank ends adapted to be releasably engaged with keepers disposed respectively above and below the doors, a horizontally disposed member rigidly secured to said bar, a clevis on said member, a lever pivotally mounted intermediate its ends on said member for vertical swinging movement, and a member secured to one of said doors, said latter member being engageable by the upper end of said lever, and said lever being swingable vertically to impart horizontal swinging movement to said first-mentioned member and rotation to said bar.

10. In a fastening device for a pair of swinging doors one of which overlaps the other, said fastening device embodying a vertical bar rotatably mounted on the overlapping door and having crank ends adapted to be releasably engaged with keepers disposed respectively above and below the doors, a horizontally disposed member rigidly secured to said bar, a clevis on said member, a lever pivotally mounted intermediate its ends on said member for vertical swinging movement, and a member secured to one of said doors, said latter member being engageable by the upper end of said lever, and said lever being swingable vertically to impart horizontal swinging movement to said first-mentioned member and rotation to said bar, and means on one of said doors engaging and automatically locking said lever.

11. In a door fastening device embodying a

vertical bar rotatably mounted on said door and having crank ends cooperatively associated with means disposed, respectively, above and below said door, means secured to said bar and swingable horizontally to impart rotation thereto, a lever pivotally mounted intermediate its ends on said latter means for vertical swinging movement, and a member secured to said door, said member being engageable by the upper end of said lever, and said lever being swingable vertically to impart horizontal swinging movement to said second mentioned means and rotation to said bar.

12. In a door fastening device embodying a vertical bar rotatably mounted on said door and having crank ends cooperatively associated with means disposed, respectively, above and below said door, means secured to said bar and swingable horizontally to impart rotation thereto, a lever pivotally mounted for vertical swinging movement, said lever extending below said second-mentioned means, said lever being formed with a hole extending through said lever, the end of said second-mentioned means being adapted to releasably extend through the hole in the lever, said lever being swingable vertically to impart horizontal swinging movement to said second-mentioned means and rotation to said bar.

13. In a fastening device for a swinging door embodying a vertical bar rotatably mounted on the door and having crank ends adapted to be releasably engaged with keepers disposed, respectively, above and below the door, means secured to said bar, said means being swingable horizontally to impart rotation to said bar, a lever pivotally mounted for vertical swinging movement, said lever extending below said means, said lever being formed with a hole extending through the lever, the end of said means being adapted to releasably extend through said hole in said lever, said lever being swingable vertically to impart horizontal swinging movement to said means and rotation to said bar.

14. In a fastening device for a swinging door embodying a vertical bar rotatably mounted on the door and having crank ends adapted to be releasably engaged with keepers disposed, respectively, above and below the door, a horizontally disposed member rigidly secured to said bar, a lever pivotally mounted intermediate its ends on said member for vertical swinging movement, and a member secured to said door, said latter member being engageable by the upper end of said lever, said lever being operable to impart horizontal swinging movement to said first-mentioned member, and rotation to said bar.

15. In a fastening device for a pair of swinging doors one of which overlaps the other, said fastening device embodying a vertical bar rotatably mounted on the overlapping door and having crank ends adapted to be releasably engaged with keepers disposed, respectively, above and below the door, means secured to said bar, said means being swingable horizontally to impart rotation to said bar, means secured to one of said doors, and a lever pivotally secured to one of said means for vertical swinging movement and releasable engagement with the other of said means, said means secured to said one door providing a fulcrum about which said lever is swingable vertically, said engagement between said lever and said latter means substantially confining said lever to vertical swinging movement.

16. In a fastening device for a pair of swinging doors one of which overlaps the other, said fastening device embodying a vertical bar rotatably mounted on the overlapping door and having crank ends adapted to be releasably engaged with keepers disposed, respectively, above and below the doors, means secured to said bar, said means being swingable horizontally to impart rotation to said bar, means secured to one of said doors, and a lever pivotally mounted on one of said means so as to have only vertical swinging movement about its pivot, said lever having releasable engagement with the other of said means, said lever extending below said first mentioned means and being operable to impart horizontal swinging movement to said first mentioned means and rotation to said bar.

17. In a fastening device for a swinging door embodying a vertical bar rotatably mounted on the door and having crank ends adapted to be releasably engaged with keepers disposed, respectively, above and below the door, means secured to said bar and swingable horizontally to impart rotation thereto, second means, and a lever, said lever being pivotally engaged with one of said means and releasably engageable with the other of said means, said second means providing a fulcrum about which said lever is swingable vertically, said engagement between said lever and said latter means substantially confining said lever to vertical swinging movement.

18. In a door fastening device embodying a vertical bar rotatably mounted on said door and having crank ends cooperatively associated with means disposed, respectively, above and below said door, means secured to said bar and swingable horizontally to impart rotation thereto, means secured to said door, and a lever, said lever being pivotally engaged with one of said two last mentioned means and releasably engageable with the other of said two last mentioned means, said means secured to said door providing a fulcrum about which said lever is swingable vertically, said engagement between said lever and said latter means substantially confining said lever to vertical swinging movement.

19. In a door fastening device embodying a vertical bar rotatably mounted on said door and having crank ends cooperatively associated with means disposed, respectively above and below said door, means secured to said bar and swingable horizontally to impart rotation thereto, a member, and a lever, said lever being pivotally mounted on said member for vertical swinging movement, said mounting of said lever substantially confining said lever to vertical swinging movement, said lever extending below said second mentioned means and being formed with a hole extending through the lever, the end of said second mentioned means being adapted to releasably extend through said hole in said lever, said lever being swingable vertically to impart horizontal swinging movement to said second mentioned means and rotation to said bar.

20. In a fastening device for a swinging door embodying a vertical bar rotatably mounted on the door and having crank ends adapted to be releasably engaged with keepers disposed, respectively, above and below the door, means secured to said bar and swingable horizontally to impart rotation thereto, a member, and a lever, said lever being pivotally mounted on said member for vertical swinging movement, said mounting of

said lever substantially confining said lever to vertical swinging movement, said lever extending below said means and being formed with a hole extending through the lever, the end of said means being adapted to releasably extend through said hole in said lever, said lever being swingable vertically to impart horizontal swinging movement to said means and rotation to said bar.

WILFRED A. BEAUCHAMP.

REFERENCES CITED

The following references are of record in the file of this patent:

UNITED STATES PATENTS

Number	Name	Date
1,952,112	Bartsch	Mar. 27, 1934
2,038,876	Sonabend	Apr. 28, 1936
2,280,232	Haseltine	Apr. 21, 1942
2,298,259	Dunham	Oct. 6, 1942
2,442,031	Beauchamp	May 25, 1948

FOREIGN PATENTS

Number	Country	Date
190,370	Switzerland	Apr. 30, 1937