Innovation, Sciences et Développement économique Canada
Office de la Propriété Intellectuelle du Canada

Innovation, Science and Economic Development Canada
Canadian Intellectual Property Office

CA 2930353 C 2019/07/09

(11)(21) **2 930 353**

(12) **BREVET CANADIEN**
CANADIAN PATENT

(13) **C**

(86) **Date de dépôt PCT/PCT Filing Date:** 2014/11/16
(87) **Date publication PCT/PCT Publication Date:** 2015/05/21
(45) **Date de délivrance/Issue Date:** 2019/07/09
(85) **Entrée phase nationale/National Entry:** 2016/05/11
(86) **N° demande PCT/PCT Application No.:** IB 2014/002456
(87) **N° publication PCT/PCT Publication No.:** 2015/071743
(30) **Priorité/Priority:** 2013/11/16 (IT RM2013U000196)

(51) **Cl.Int./Int.Cl.** ***B65D 43/02*** (2006.01)

(72) **Inventeur/Inventor:**
D'AMATO, GIANFRANCO, IT

(73) **Propriétaire/Owner:**
SEDA INTERNATIONAL PACKAGING GROUP SPA, IT

(74) **Agent:** ROBIC

(54) **Titre : COUVERCLE POUVANT ETRE REFERME**
(54) **Title: RECLOSABLE LID**

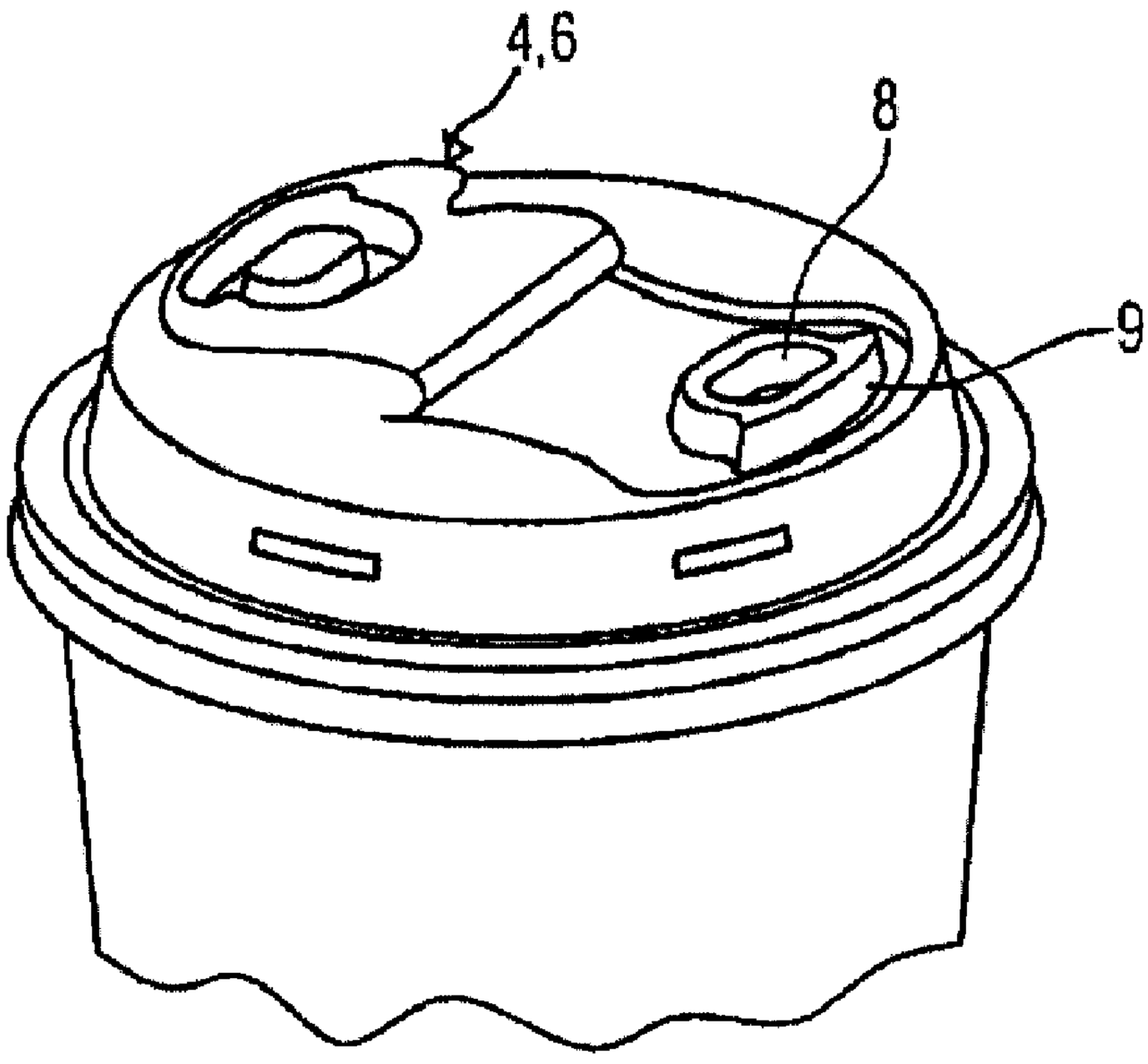

(57) **Abrégé/Abstract:**
The present invention provides a reclosable lid for a cup or beaker for beverage, the lid comprising an edge region adapted to provide the coupling with a respective edge of said cup or beaker, and a dispensing port of the beverage contained within of said cup or beaker, the lid is characterized in that it comprises a further upper region connected from the edge region and where closing means for closing said dispensing port and supporting means for supporting said closing means are formed.

(12) INTERNATIONAL APPLICATION PUBLISHED UNDER THE PATENT COOPERATION TREATY (PCT)

(19) World Intellectual Property Organization
International Bureau

(43) International Publication Date
21 May 2015 (21.05.2015)

WIPO | PCT

(10) International Publication Number
WO 2015/071743 A1

(51) International Patent Classification:
B65D 43/02 (2006.01)

(21) International Application Number:
PCT/IB2014/002456

(22) International Filing Date:
16 November 2014 (16.11.2014)

(25) Filing Language: Italian

(26) Publication Language: English

(30) Priority Data:
RM2013U000196 16 November 2013 (16.11.2013) IT

(71) Applicant: **SEDA SUISSE A.G.** [CH/CH]; 3 Rigistrasse, CH-6300 Zug (CH).

(72) Inventor: **D'AMATO, Gianfranco**; Corso Salvatore D'Amato 84, I-80022 Arzano NA (IT).

(74) Agent: **IACOBELLI, Daniele, T.**; Via Filippi 9, I-00146 Roma (IT).

(81) Designated States *(unless otherwise indicated, for every kind of national protection available)*: AE, AG, AL, AM, AO, AT, AU, AZ, BA, BB, BG, BH, BN, BR, BW, BY, BZ, CA, CH, CL, CN, CO, CR, CU, CZ, DE, DK, DM, DO, DZ, EC, EE, EG, ES, FI, GB, GD, GE, GH, GM, GT, HN, HR, HU, ID, IL, IN, IR, IS, JP, KE, KG, KN, KP, KR, KZ, LA, LC, LK, LR, LS, LU, LY, MA, MD, ME, MG, MK, MN, MW, MX, MY, MZ, NA, NG, NI, NO, NZ, OM, PA, PE, PG, PH, PL, PT, QA, RO, RS, RU, RW, SA, SC, SD, SE, SG, SK, SL, SM, ST, SV, SY, TH, TJ, TM, TN, TR, TT, TZ, UA, UG, US, UZ, VC, VN, ZA, ZM, ZW.

(84) Designated States *(unless otherwise indicated, for every kind of regional protection available)*: ARIPO (BW, GH, GM, KE, LR, LS, MW, MZ, NA, RW, SD, SL, ST, SZ, TZ, UG, ZM, ZW), Eurasian (AM, AZ, BY, KG, KZ, RU, TJ, TM), European (AL, AT, BE, BG, CH, CY, CZ, DE, DK, EE, ES, FI, FR, GB, GR, HR, HU, IE, IS, IT, LT, LU, LV, MC, MK, MT, NL, NO, PL, PT, RO, RS, SE, SI, SK, SM, TR), OAPI (BF, BJ, CF, CG, CI, CM, GA, GN, GQ, GW, KM, ML, MR, NE, SN, TD, TG).

Published:

— *with international search report (Art. 21(3))*

[Continued on next page]

(54) Title: RECLOSABLE LID

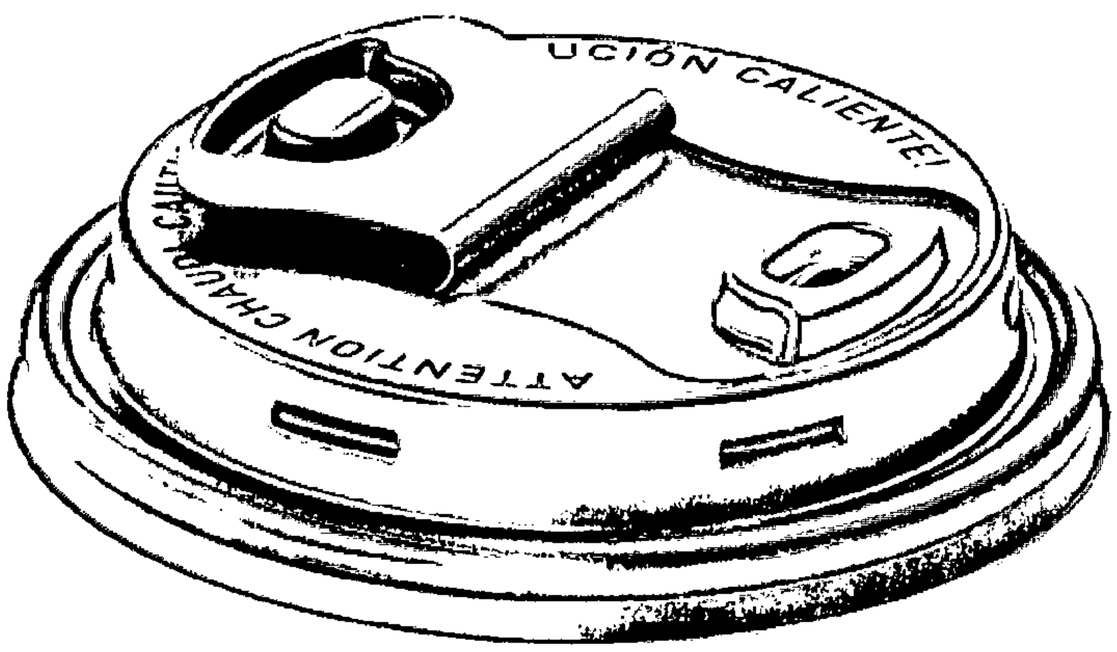

FIG. 3

(57) Abstract: The present invention provides a reclosable lid for a cup or beaker for beverage, the lid comprising an edge region adapted to provide the coupling with a respective edge of said cup or beaker, and a dispensing port of the beverage contained within of said cup or beaker, the lid is characterized in that it comprises a further upper region connected from the edge region and where closing means for closing said dispensing port and supporting means for supporting said closing means are formed.

WO 2015/071743 A1

— *before the expiration of the time limit for amending the claims and to be republished in the event of receipt of amendments (Rule 48.2(h))*

RECLOSABLE LID

DESCRIPTION

The present invention relates to a lid and, more precisely, to a reclosable lid for a cup or beaker for beverages of the type suitable for the take-away and the subsequent consumption of the beverage.

Prior Art

Up until now, different types of lids for cups or beakers for soft drinks or the like have been widely used, and typically in "fast food" where the beverage within said cups is taken away for the subsequent consummation of the beverage.

For example, in the case of hot beverages such as coffee or tea there is provided the use of a first type of lids which in addition to ensuring a sealed coupling with the edge of the cup, have a small dispensing port above the lid where the consumer can put his own lips and slowly sip the beverage without causing spills. This functional solution, although very practical and simple has the drawback of not preventing any leakage of the beverage in the event of overturning of the cup.

Alternatively, there have been proposed on the market different types of reclosable lids, which allow the closing of the upper dispensing port after the user sip the beverage or during the transporting of the cup. With this aim, there may be provided different arrangements.

Brief Description of the Invention

According to a first embodiment, there is provided a movable closing member connected to the lid and which is used by inserting it in the dispensing port, obtaining the closing of the same. Alternatively to this embodiment, a different solution is proposed and foresees that the lid be made by two members arranged one above the other, and that the closing of the dispensing port be obtained by rotation of the first member with respect to the second member.

All these constructive solutions discretely solve in a satisfactory manner the problem of being able to close the dispensing port of the lid during the transporting or non-use of the cup.

An object of the present invention is to provide an improved lid for cups or beakers which guarantees seal against spillage at the coupling area between the edge of the cup and the lid and, at the same time, ensures an improved sealing at the dispensing port.

Another object of the present invention is to provide an improved lid for cups or beakers for the containing of hot drinks at "Fast Food" selling points, and ensuring a good seal against spillage of the beverage through the dispensing port and in case of overturning of the cup.

A further object of the present invention is to provide a lid for cups or beakers which is reclosable with high sealing reliability against spillage and at the same time that is easy to make, effective, and low cost.

According to a broad aspect, the invention provides a reclosable lid for a cup or beaker for beverage, the lid comprising first and second lid bodies each comprising an edge region adapted to provide coupling with a respective edge of the cup or beaker, and an upper region connected to the edge regions, wherein the first lid body is configured to be insertable inside the second lid body and comprises a dispensing port in the upper region, wherein the second lid body comprises a closure member for closing the dispensing port and a supporting means for supporting the closure member in an opened position, and wherein the closure member and the supporting means are formed in the upper region of the second lid body.

Preferably, the present invention provides a reclosable lid for cups or beakers, which comprises an edge region adapted to provide the coupling with a respective edge of a cup or beaker, a dispensing port formed integrally at the top of the lid, and a closure member of said dispensing port integrally formed at the top wall of the lid,

the closure member being mounted in order to oscillate between a first closed condition, wherein it is inserted into the dispensing opening of the lid, and a second opened condition where the dispensing port it is opened, and wherein the closure member it is rotated by 180° from its first condition and is locked onto a locking member integral to said lid.

The closure member may comprise a projecting member integrally formed in the upper region of the second lid body. The supporting means may comprise a protruding member and, in the opened position, the closure member is pivotable onto the protruding member such that the protruding member supports the closure member. When the reclosable lid is in a closed position, the closure member closes the dispensing port, and when the reclosable lid is in the opened position, the closure member is pivoted by 180°. The projecting member of the closure member is within the dispensing port when the reclosable lid is in the closed position, and when the closure member is pivoted onto the protruding member and the reclosable lid is in the opened position, the protruding member is within the projecting member. The protruding member may be diametrically opposite to the dispensing port and, when the reclosable lid is in the opened position, the dispensing port is free and the closure member is pivoted by 180° onto the protruding member. The closure member may have a hollow shape around the projecting member such that the projecting member is within the dispensing port and the dispensing port is within the hollow shape when the reclosable lid is in the closed position. The protruding member may be formed integrally onto the second lid body.

Thus, the present invention provides a reclosable lid for cups or beakers.

Detailed Description of the Invention

A detailed description of a preferred embodiment of the reclosable lid for cups or beakers of the present invention will now be given by way of a non limiting example and with reference to the appended drawings, wherein:

Figure 1 is a front perspective view from above of the lid of the present invention when coupled with a beaker;

Figure 2 is a front perspective view and from above of the lid of Figure 1 in the closed condition;

Figure 3 is a front perspective view and from above of the lid of Figure 1 in the opened condition;

Figure 4 is a perspective view and in a longitudinal section of the lid of the present invention in the closed condition where the arrow shows pivotable direction into the opened condition; and

Figure 5 is a perspective view and in a longitudinal section of the lid of the present invention in the opened condition.

Variants, examples and preferred embodiments of the invention are described hereinbelow.

More particularly, with reference to Figure 1, therein is illustrated the lid 1 of the present invention coupled to a paper material beaker. According to the present invention, there is provided a reclosable lid 1 for cups 2 or beakers, which comprises an edge region 3 adapted to provide the coupling with a respective edge 12 of a cup 2 or beaker.

Above the edge region 3, the lid 1 has a pair of protruding members 4, 5 each arranged diametrically opposite to the other, a first protruding member 4 consisting of a closure member, while the second protruding member 5 being a supporting member 7 of the closure member or closing means 6. As will be better illustrated hereinafter, the closure member 6 has a hollow shape and is mounted in an oscillating manner with respect to the top of the lid 1.

With particular reference now to Figures 2 and 3, the closure member 6 for a dispensing port 8 of the lid 1 has a hollow shape and projects above from the plane.

With particular reference to Figure 3, there is illustrated therein the reclosable lid 1 in an opened operating condition, wherein the closure member 6 of the dispensing port 8 is in a rotated condition by 180° with respect to the closed condition. According to this embodiment and as it is apparent from the drawing, the beverage dispensing port 8 of the lid has a further projecting member 9 that is protruding from a second lid body 10 which it is arranged below a first lid body 11 (better illustrated below).

With reference now to Figure 4, the lid 1 of the present invention is shown in a longitudinal cross section and in the closed condition. The lid is formed by said two lid bodies 10, 11, wherein the first lid body 11 is inserted inside the second lid body 10. In this condition, the closure member 6 is inserted over a projecting member 9 integral to the second lid body 10 and which comprises the dispensing port 8 of the lid 1.

According to Figure 5, the lid 1 is in its fully opened condition, wherein the dispensing port 8 is free of any closure, and wherein the closure member 6 is completely rotated by 180° onto the second lid body 10. In this condition, the closure member 6 is rotated onto the respective supporting member integrally formed onto the second lid body and at the opposite side of the closure member 6.

As it is evident, the closure member 6 of the lid 1 is hollow and is adapted to be rotated onto the dispensing port of the lid, and also it is adapted to be mounted in a removable manner onto the supporting member which is integrally projecting from to the second body lid and formed at a diametrically opposite part from the closure member.

CLAIMS

1. A reclosable lid for a cup or beaker for beverage, the lid comprising first and second lid bodies each comprising an edge region adapted to provide coupling with a respective edge of the cup or beaker, and an upper region connected to the edge regions, wherein the first lid body is configured to be insertable inside the second lid body and comprises a dispensing port in the upper region, wherein the second lid body comprises a closure member for closing the dispensing port and a supporting means for supporting the closure member in an opened position, and wherein the closure member and the supporting means are formed in the upper region of the second lid body.

2. The reclosable lid according to claim 1, wherein the closure member comprises a projecting member integrally formed in the upper region of the second lid body.

3. The reclosable lid according to claim 1 or 2, wherein the supporting means comprises a protruding member and wherein, in the opened position, the closure member is pivoted onto the protruding member such that the protruding member supports the closure member.

4. The reclosable lid according to any one of claims 1 to 3, wherein, when the reclosable lid is in a closed position, the closure member closes the dispensing port, and when the reclosable lid is in the opened position, the closure member is pivoted by 180°.

5. The reclosable lid according to claim 3, wherein the projecting member of the closure member is within the dispensing port when the reclosable lid is in a closed position, and wherein, when the closure member is pivoted onto the protruding member and the reclosable lid is in the opened position, the protruding member is within the projecting member.

6. The reclosable lid according to claim 3, wherein the protruding member is diametrically opposite to the dispensing port and wherein, when the reclosable lid is in

the opened position, the dispensing port is free and the closure member is pivoted by 180° onto the protruding member.

7. The reclosable lid according to claim 3, wherein the closure member has a hollow shape around the projecting member such that the projecting member is within the dispensing port and the dispensing port is within the hollow shape when the reclosable lid is in a closed position.

8. The reclosable lid according to claim 7, wherein the protruding member is diametrically opposite to the dispensing port and wherein, when the reclosable lid is in the opened position, the dispensing port is free and the closure member is pivoted by 180° onto the protruding member.

9. The reclosable lid according to any one of claims 3 to 8, wherein the protruding member is formed integrally onto the second lid body.

FIG. 1

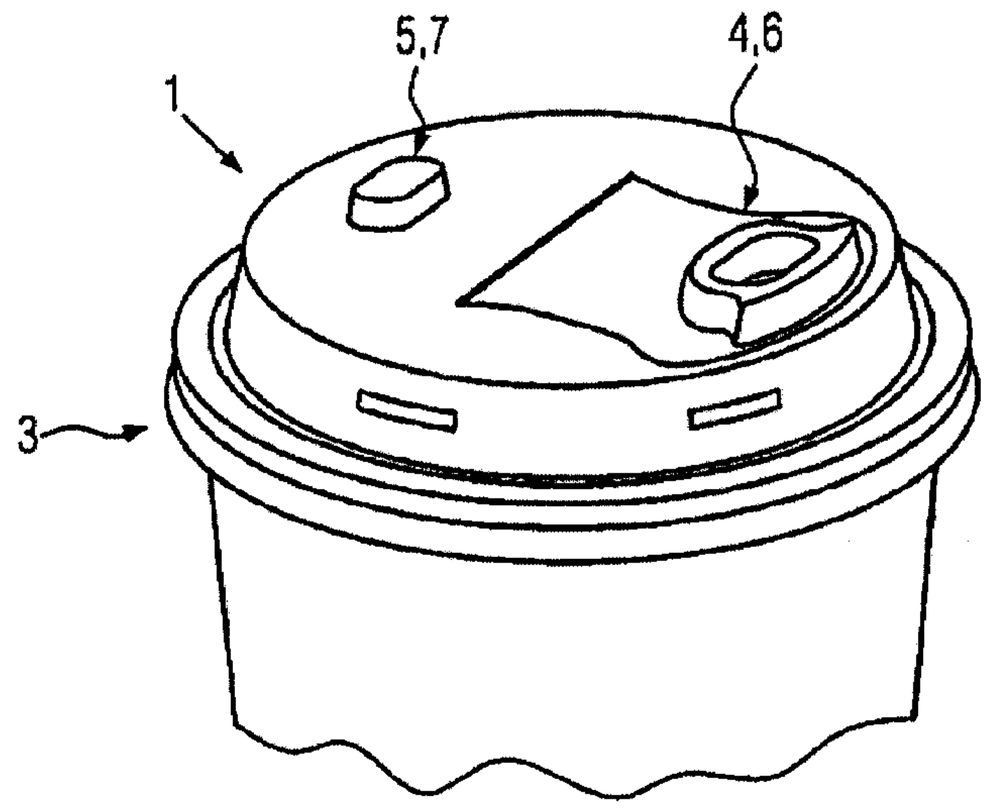

FIG. 2

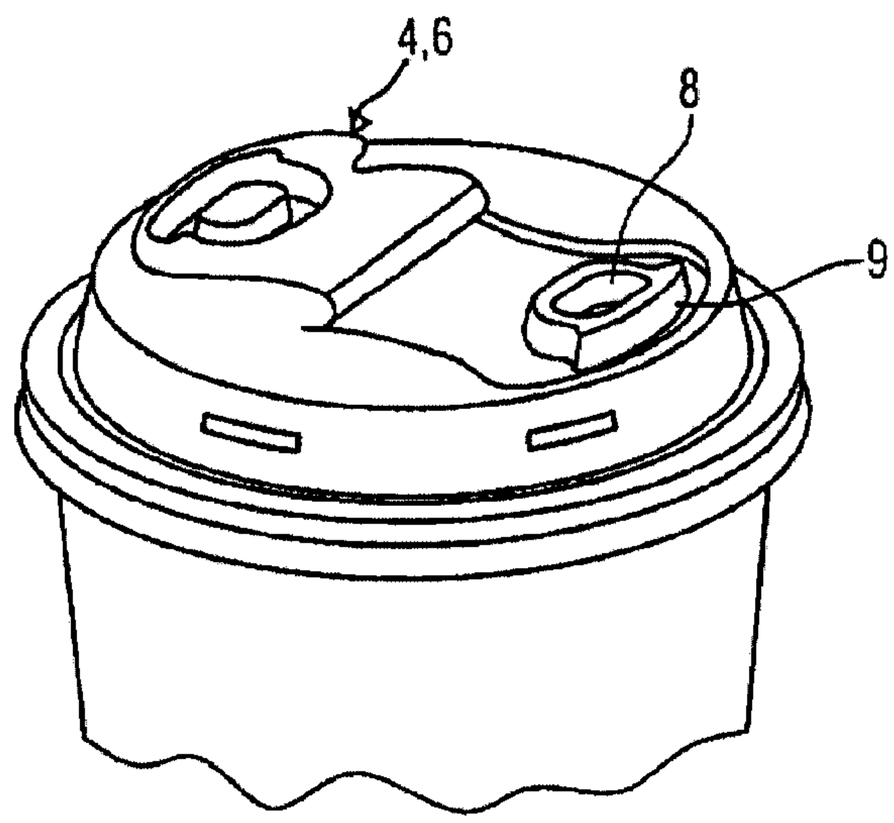

FIG. 3

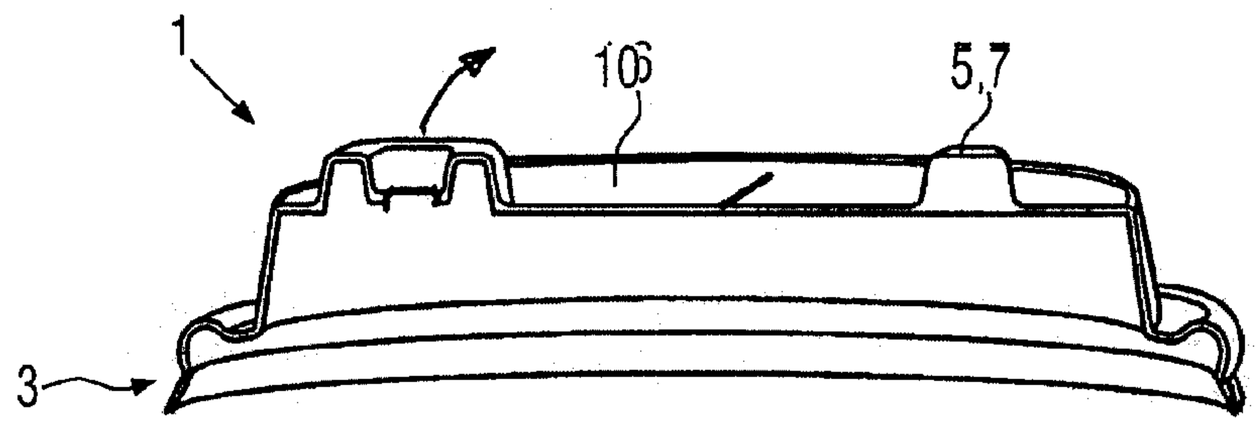

FIG. 4

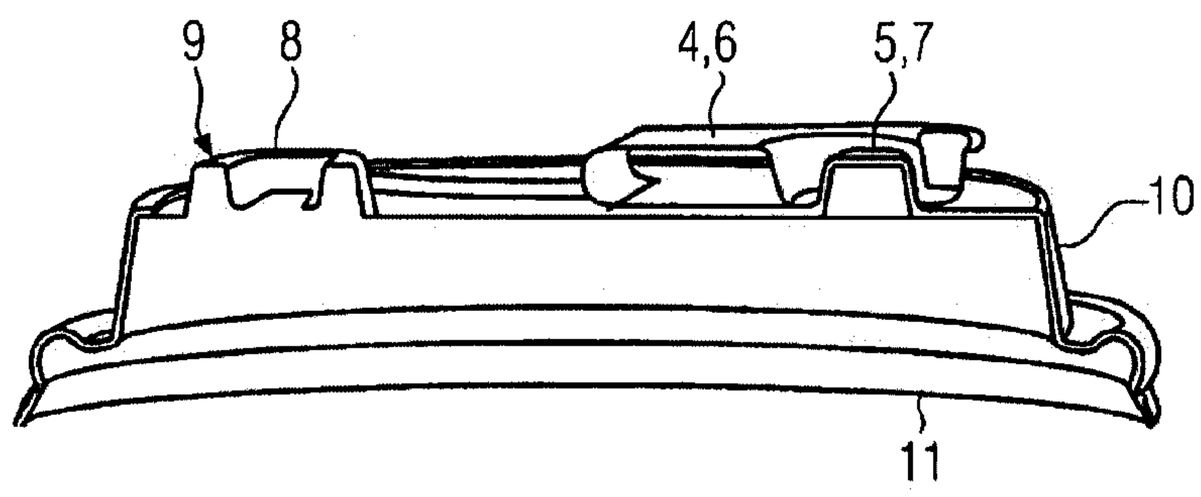

FIG. 5

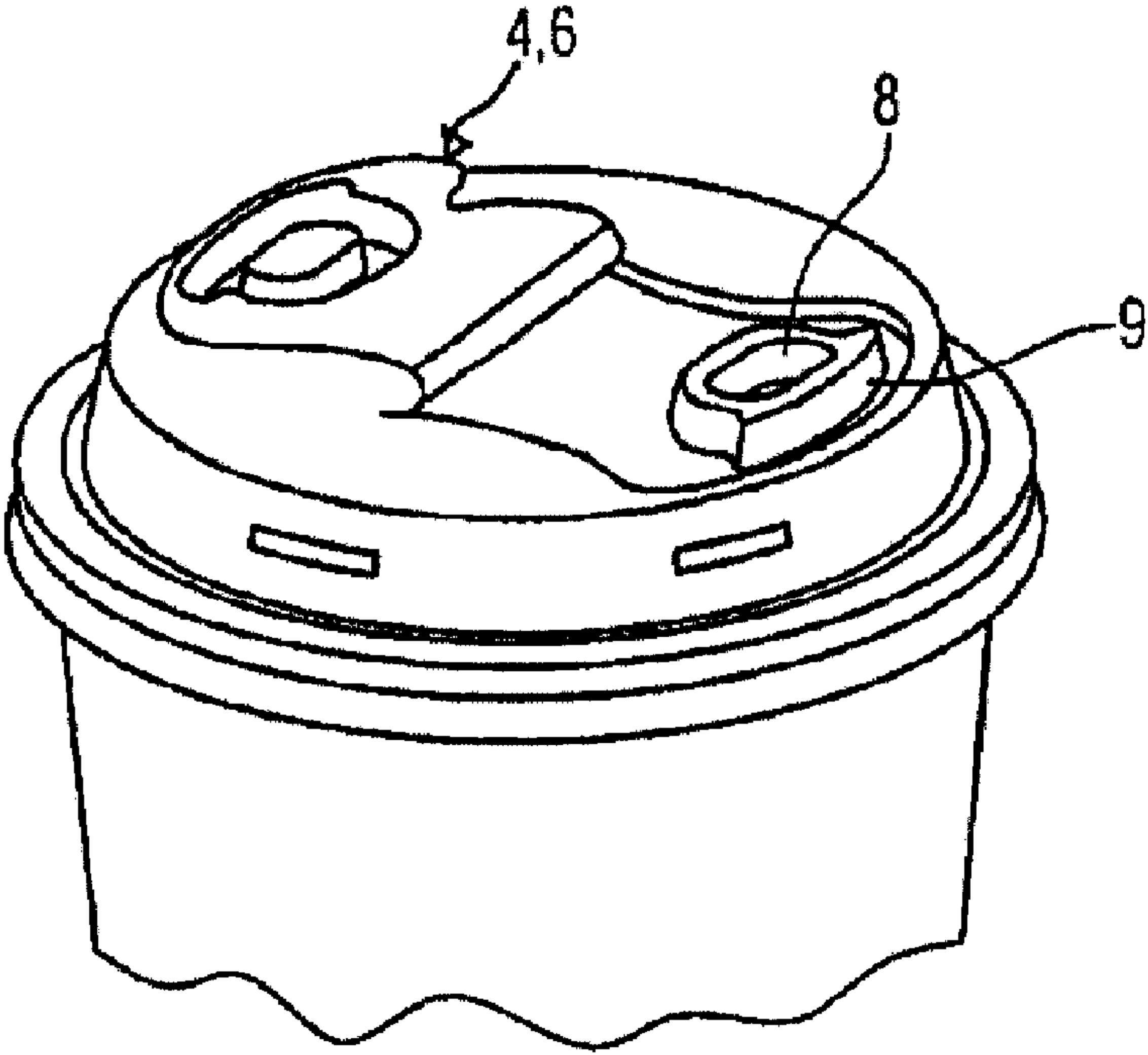
4,6
8
9