668519

SPRUSON & FERGUSON

AUSTRALIA

PATENTS ACT 1990

PATENT REQUEST: STANDARD PATENT

I/We, the Applicant(s)/Nominated Person(s) specified below, request I/We be granted a patent for the invention disclosed in the accompanying standard complete specification.

[70,71] Applicant(s)/Nominated Person(s):

InterVentional Technologies, Inc., of 3574 Ruffin Road, San Diego, California, 92123, UNITED STATES OF AMERICA

[54] Invention Title:

Stenotic Dilatation Device

[72] Inventor(s):

Dennis M. Vigil, Peter Barath

[74] Address for service in Australia:

Spruson & Ferguson, Patent Attorneys
Level 33 St Martins Tower
31 Market Street
Sydney New South Wales Australia (Code **SF**)

Details of Basic Application(s):

[31] Appl'n No(s):	**[33] Country:**	**[32] Application Date:**
870,148	US	17 April 1992

DATED this SEVENTH day of OCTOBER 1992

InterVentional Technologies, Inc.

By: J. Ferguson

Registered Patent Attorney

IRN: 221119

INSTR CODE: 64228

5845/4

SPRUSON & FERGUSON

Australia

Patents Act 1990

NOTICE OF ENTITLEMENT

I, Gerard F. Becker, Vice President, of InterVentional Technologies, Inc., 3574 Ruffin Road, San Diego, California, 92123, United States of America, being authorised by the Applicant/Nominated Person in respect of an application entitled:

Stenotic Dilitation Device

state the following:-

The Applicant/Nominated Person has entitlement from the actual inventor(s) as follows:-

The Applicant/Nominated Person is the assignee of the actual inventor(s).

The Applicant/Nominated Person is entitled to rely on the basic application(s) listed on the Patent Request as follows:

The Applicant/Nominated Person is the assignee of the basic applicant(s).

The basic application(s) listed on the Patent Request is/are the application(s) first made in a Convention country in respect of the invention.

DATED this 28th day of October 1992

Gerard F. Becker
Vice President

IRN: 221119 INSTR CODE: 64228

KRS/7040T

AU9226313

(12) PATENT ABRIDGMENT (11) Document No. AU-B-26313/92
(19) AUSTRALIAN PATENT OFFICE (10) Acceptance No. 668519

(54) Title
STENOTIC DILATATION DEVICE

(51)[5] International Patent Classification(s)
A61M 029/02

(21) Application No. : **26313/92** (22) Application Date : **08.10.92**

(30) Priority Data

(31) Number	(32) Date	(33) Country
870148	**17.04.92**	**US UNITED STATES OF AMERICA**

(43) Publication Date : **21.10.93**

(44) Publication Date of Accepted Application : **09.05.96**

(71) Applicant(s)
INTERVENTIONAL TECHNOLOGIES, INC.

(72) Inventor(s)
DENNIS M. VIGIL; PETER BARATH

(74) Attorney or Agent
SPRUSON & FERGUSON , GPO Box 3898, SYDNEY NSW 2001

(56) Prior Art Documents
US 5196024
AU 50982/90 A61B, A61M
DE 3402573

(57) Claim

1. An angioplasty device for dilating a stenosis in a blood vessel comprising:

a catheter having a distal end and a proximal end;

a flexible and substantially cylindrical balloon membrane having an inner surface, an outer surface, a distal end, and a proximal end, said distal end of said balloon membrane being attached near the distal end of said catheter, and said proximal end of said balloon membrane being attached to said catheter at a distance proximal from the distal end of said catheter to said catheter;

a plurality of atherotomes each said atherotome comprising a cutting structure with a base, each said base being embedded in a substrate mounted on the outer surface of said balloon membrane and aligned along the longitudinal axis of said catheter; and wherein said balloon membrane is adapted to form flaps when deflated to protect a blood vessel wall from said atherotomes.

14. An angioplasty device for dilating a stenosis in a blood vessel, comprising:

a balloon membrane having a substantially cylindrical shape when inflated and forming a plurality of concave sides when deflated;

a plurality of atherotomes, each of said atherotomes having a blade-like structure embedded in a substrate with a cutting edge of the structure protruding from said substrate, said substrate being mounted on the outer surface of said balloon membrane to align said atherotome along the longitudinal axis of said balloon and

.../2

circumferentially position said atherotomes equidistant from each adjacent said atherotome;

a plurality of creases formed in the surface of said balloon membrane to form flaps in said balloon membrane when said balloon membrane is deflated each crease being in substantially parallel alignment with the longitudinal axis of said balloon to provide an attachment point for one said atherotome and position said atherotome between said flaps; and

a catheter in fluid communication with said balloon membrane for inflating/deflating the balloon membrane.

18. A method for using an angioplasty device for dilating a stenosis in a blood vessel which comprises the steps of:

inserting said device into said blood vessel, said device comprising a catheter having a distal end and a proximal end, a flexible and substantially cylindrical balloon membrane having an inner surface, an outer surface, a distal end, and a proximal end, said distal end of said balloon membrane being attached near the distal end of said catheter, and said proximal end of said balloon membrane being attached at a distance proximal from the distal end of said catheter to said catheter, and a plurality of atherotomes each having a cutting edge structure with a base, each said base being embedded in a substrate mounted on the outer surface of said balloon membrane and aligned along the longitudinal axis of said catheter with said cutting edges oriented radially outwardly from said catheter;

positioning said balloon membrane of said device across said stenosis;

inflating said balloon membrane to urge said cutting edges of said atherotomes into said stenosis and to simultaneously dilate said stenosis;

deflating said balloon to form a plurality of flaps adapted to protect a blood vessel wall from said atherotomes; and

withdrawing said device from said blood vessel.

668519 & F Ref: 221119

AUSTRALIA

PATENTS ACT 1990

COMPLETE SPECIFICATION

FOR A STANDARD PATENT

ORIGINAL

Name and Address of Applicant: InterVentional Technologies, Inc.
3574 Ruffin Road
San Diego California 92123
UNITED STATES OF AMERICA

Actual Inventor(s): Dennis M. Vigil, Peter Barath

Address for Service: Spruson & Ferguson, Patent Attorneys
Level 33 St Martins Tower, 31 Market Street
Sydney, New South Wales, 2000, Australia

Invention Title: Stenotic Dilatation Device

The following statement is a full description of this invention, including the best method of performing it known to me/us:-

FIELD OF THE INVENTION

The present invention relates generally to devices which treat stenoses in blood vessels. More particularly, the present invention relates to angioplasty devices. The present invention particularly, though not exclusively, relates to an angioplasty device which enhances dilation of a vessel wall across a stenotic section by incising the stenosis to relieve stress in the vessel during dilation.

BACKGROUND OF THE INVENTION

Blockage of human arteries is a widespread malady and, as such, represents a significant health concern. Blockages reducing blood flow through the coronary arteries to the heart can cause heart attacks, while blockages reducing blood flow through the arteries to the brain can cause strokes. Similarly, arterial blockages reducing blood flow through arteries to other parts of the body can produce grave consequences in an affected organ or limb.

The build-up of atherosclerotic plaque is a chief cause of blockages, termed stenoses, which reduce blood flow through the arteries. Consequently, several methods have been introduced to alleviate the effects of plaque build-up restricting the artery. One such method is a procedure termed angioplasty, which uses an inflatable device positioned at the stenosis to dilate the artery. A typical angioplasty device is disclosed in U.S. Patent No. 4,896,669 to Bhate et al. The device of Bhate et al is typical and, like other angioplasty devices, includes an inflatable balloon which is attached to the distal end of a hollow catheter. The proximal end of the catheter is attached to a fluid source. To treat an arterial stenosis, the balloon is introduced into the artery in a deflated state and guided through the artery over a guide wire to a position adjacent the stenosis. Fluid from the fluid source is then infused into the balloon via the catheter to inflate the balloon. As the balloon expands, it presses

against the arterial wall in the region of the stenosis, dilating the artery at the stenosis and restoring it to a sufficient size for adequate blood flow. The balloon is then deflated and removed form the artery, thereby completing the treatment.

While effective for dilating blood vessels, angioplasty devices simultaneously traumatize the tissue of the vessel wall. The dilation procedure can sometimes excessively stress the tissue of the wall, even to the point of tearing it. Dire consequences to the patient such as an acute occlusion or a thrombosis can result. To address this shortcoming, angioplasty devices have been developed which employ a cutting element in cooperation with the balloon to reduce stress on the tissue of the vessel wall.

One particular disadvantage of an angioplasty device which employs a cutting element, however, is that the cutting element can be exposed to surrounding healthy tissue during placement of the device in the blood vessel of a patient, even when the balloon is deflated. As a result, the sharpened cutting element can inadvertently damage healthy tissue with which it comes in contact. Accordingly, the present invention recognizes a need to provide an angioplasty device which effectively employs a cutting element in cooperation with a balloon during a procedure for dilatation of a stenosis, yet protects healthy tissue from damage during placement of the device in a blood vessel to be treated.

It is an object of this invention to provide an improved stenotic dilatation device which may be placed or removed without damage to healthy tissue, thus minimizing trauma, by incorporating one or more cutting elements (atherotomes) and a balloon membrane which, when deflated, protects a blood vessel wall from said atherotomes.

AUSTRALIAN PATENT OFFICE PB

SUMMARY OF THE INVENTION

This invention in one broad form provides an angioplasty device for dilating a stenosis in a blood vessel comprising:

a catheter having a distal end and a proximal end;

a flexible and substantially cylindrical balloon membrane having an inner surface, an outer surface, a distal end, and a proximal end, said distal end of said balloon membrane being attached near the distal end of said catheter, and said proximal end of said balloon membrane being attached to said catheter at a distance proximal from the distal end of said catheter to said catheter; and

a plurality of atherotomes each said atherotome comprising a cutting structure with a base, each said base being embedded in a substrate mounted on the outer surface of said balloon membrane and aligned along the longitudinal axis of said catheter, and wherein said balloon membrane is adapted to form flaps when deflated to protect a blood vessel wall from said atherotomes.

In a further broad form, this invention provides an angioplasty device for dilating a stenosis in a blood vessel, comprising:

a balloon membrane having a substantially cylindrical shape when inflated and forming a plurality of concave sides when deflated;

a plurality of atherotomes, each of said atherotomes having a blade-like structure embedded in a substrate with a cutting edge of the structure protruding from said substrate, said substrate being mounted on the outer surface of said balloon membrane to align said atherotome along the longitudinal axis of said balloon and circumferentially position said atherotomes equidistant from each adjacent said atherotome;

a plurality of creases formed in the surface of said balloon membrane to form flaps in said balloon membrane when said balloon membrane is deflated each crease being in substantially parallel alignment with the longitudinal axis of said balloon to provide an attachment point for one said atherotome and position said atherotome between said flaps; and

a catheter in fluid communication with said balloon membrane for inflating/deflating the balloon membrane.

The preferred atherotome, for purposes of the present invention, is a metallic blade-like structure embedded in a polyurethane substrate.

There is still further disclosed herein a method for using an angioplasty device for dilating a stenosis in a blood vessel which comprises the steps of:

inserting said device into said blood vessel, said device comprising a catheter having a distal end and proximal end, a flexible and substantially cylindrical balloon membrane having an inner surface, an outer surface, a distal end, and a proximal end, said distal end of said balloon membrane being attached near the distal end of said

AUSTRALIAN PATENT OFFICE RB

catheter, and said proximal end of said balloon membrane being attached at a distance proximal from the distal end of said catheter to said catheter, and a plurality of atherotomes each having a cutting edge structure with a base, each said base being embedded in a substrate mounted on the outer surface of said balloon membrane and aligned along the longitudinal axis of said catheter with said cutting edges oriented radially outwardly from said catheter;

positioning said balloon membrane of said device across said stenosis;

inflating said balloon membrane to urge said cutting edges of said atherotomes into said stenosis and to simultaneously dilate said stenosis;

deflating said balloon to form a plurality of flaps adapted to protect a blood vessel wall from said atherotomes; and

withdrawing said device from said blood vessel.

When deflated, each atherotome is preferably mounted on the outer surface of the deflated balloon is aligned along the longitudinal axis of the catheter and is circumferentially equidistant from each adjacent atherotome. Further, each atherotome is typically attached to the balloon along a crease in the balloon that is longitudinal to the axis of the catheter. As attached, the blade of each atherotome projects readily outward from the axis of the catheter. It is preferred that retraction of the atherotomes toward the longitudinal axis of the catheter during deflation of the balloon forms a flap in the balloon between adjacent atherotomes. Each flap has a folded edge that is generally parallel to the axes of each atherotome and the catheter. In such a deflated insertion configuration, the folded edges and flaps, rather than the blades of the atherotomes, contact the vessel wall as the device is manipulated into position adjacent a stenotic site, thus shielding the unoccluded vessel walls from contact with the cutting edges of the blades in the atherotomes.

AUSTRALIAN PATENT OFFICE

It will be appreciated that the balloon may be guided to the stenotic segment through a protective sheath to further minimize the possibility of damage to the vessel wall. At the stenosis, the balloon can then be extended from the sheath and positioned across the stenosis.

After dilation of the vessel, the balloon is deflated. Deflation of a preferred form of the balloon causes the balloon to collapse at the creases and have the atherotomes resume their retracted positions along the creases. Again, during withdrawal of the device from the vessel, the flaps and folded edges of the flaps will shield the wall of the vessel from the blades of the atherotomes.

BRIEF DESCRIPTION OF THE DRAWINGS

Figure 1 is a perspective view of a preferred embodiment of the present invention showing the atherotomes mounted on the inflated balloon.

Figures 2A, 2B, and 2C are perspective views of the components of an atherotome shown before attachment to the outer surface of the balloon.

Figure 3A is a cross-sectional view of the stenotic dilatation device of the present invention as seen along line 3-3 in Figure 1.

AUSTRALIAN PATENT OFFICE

Figure 3B is a cross-sectional view of the stenotic dilitation device of the present invention as shown in Figure 3A, but showing the balloon deflated.

Figure 4A is a schematic cross-sectional view of the deflated device of the present invention as seen along line 4-4 in Figure 1 within its intended operational environment.

Figure 4B is a schematic cross-sectional view of the inflated device of the present invention as seen along line 4-4 in Figure 1 within its intended operational environment.

DESCRIPTION OF PREFERRED EMBODIMENTS

Referring initially to Figure 1, the stenotic dilitation device of the present invention is shown inflated and generally designated **10**. Device **10** includes a balloon **12** positioned near the distal end **13** of a hollow catheter **14**. Catheter **14** has an extended length and is connected at its proximal end to a conventional apparatus (not shown) which has a plurality of ports formed therein. The use of various apparatus are well known to those skilled in the art for a variety of functions including placement of a guide wire in a catheter during positioning of a balloon assembly in a blood vessel, pressurized infusion of fluids into a balloon assembly using a catheter, or withdrawal of fluids or other materials from a balloon assembly through a catheter under vacuum during operation of an angioplasty device.

Figure 1 also shows that inflated balloon **12** is substantially cylindrical between a distal annulus **16a** of the outer surface **18** of balloon **12** and a proximal annulus **16b** of outer surface **18** of balloon **12**. As shown, end **22a** of balloon **12** is inwardly tapered from distal annulus **16a** toward catheter **14**. Similarly end **22b** of balloon **12** is inwardly tapered from proximal annulus **16b** toward the catheter **14**. As further shown in Figure 1, tapered ends

22a, 22b are formed with an aperture 24a, 24b accessing the interior of balloon 12 and are substantially coaxial with the longitudinal axis of catheter 14.

As further shown in Figure 1, catheter 14 enters balloon 12 through proximal aperture 24a and exits balloon 12 through distal aperture 24b. Accordingly, catheter 14 coaxially extends through balloon 12 and sealingly engages the inner surface 20 of balloon 12 (as shown in Figure 3A) at apertures 24a, 24b to prevent fluid communication between the interior of balloon 12 and apertures 24a, 24b. Sealing engagement is provided by adhesive bonding, thermal bonding, or any means well known in the art. Figure 1 also shows that extending from distal end 13 of catheter 14 is a flexible tip 26 which is made by forming a continuous helical slit along the tip 26 from distal point 26a of tip 26 to proximal point 26b of tip 26.

Figure 1 further shows balloon 12 includes a plurality of substantially identical atherotomes 28a, 28b, 28c mounted on outer surface 18 of balloon 12 aligned along the longitudinal axis of catheter 14 and circumferentially equidistant from each adjacent atherotome. (Only atherotomes 28a, 28b are visible in the view of Figure 1.) Further, although only these atherotomes are shown for device 10 in Figure 1, it will be appreciated that additional atherotomes 28 can be employed.

Figures 2A, 2B, and 2C are perspective views of components and embodiments of the atherotomes 28. As shown in Figure 2A, an atherotome 28 for the present invention can be a metallic blade-like structure 30 embedded in a polyurethane substrate 32. As shown, the blade-like structure has a cutting edge 31. Figure 2B shows the preferred embodiment of blade-like structure 30 prior to being embedded into substrate 32. In Figure 2B it is shown that the structure 30 has a cutting edge 31, step extensions 33a and 33b and, for purposes of the preferred embodiment, a plurality of semi-circular grooves 35a,b, and

c forward into the base 37. As shown, the groves 35a,b,c which are each perpendicular to the longitudinal axis of structure 30 for enhanced flexibility of the structure 30. As indicated in Figure 2B, structure 30 will be embedded into polyurethane substrate 32 (see Figure 2A) to cover the structure 30 from hash-marked line 39.

Figure 2C shows an alternate embodiment of a cutter device 34 which is also embeddable in a polyurethane substrate 32. As shown, the cutter device 34 has a base 41 formed with a cutter edge 43, and integral step extensions 45a and 45b.

As indicated in Figure 1, the atherotomes 28a, 28b, 28c will be as shown in Figure 2A. Atherotome 28 may, however, be of an embodiment as shown in Figure 2B or 2C. Either way they are attached by an adhesive to outer surface 18 of balloon 12 along the longitudinal axis of catheter 14 and circumferentially equidistant from each adjacent atherotome.

The details of the stenotic dilatation device 10 are perhaps best seen with reference to Figures 3A and 3B. Referring initially to Figure 3A, a cross-sectional view of device 10 along line 3-3 in Figure 1, balloon 12 is shown in an inflated configuration. The thicknesses of balloon 12 between outer surface 18 and inner surface 20 is exaggerated for purposes of illustration. Atherotomes 28a, 28b, 28c are shown attached to balloon 12 and substantially equidistant from each adjacent atherotome. Further, they are aligned along the longitudinal axis of catheter 14. The present embodiment of device 10 shows three atherotomes, but four or more atherotomes may be attached to balloon 12 in accordance with the present teaching.

Figures 3A and 3B show catneter 14 extending coaxially through balloon 12. Catheter 14 is shown as a single lumen catheter, although multiple lumen catheters, as are well known in the art, may be employed in device 10. One or more ports 36a, 36b in the wall of catheter 14 are shown

positioned within the interior of balloon **12** to enable the infusion or withdrawal of fluid from balloon **12** through catheter **14**. Referring to Figure 3B, a cross-sectional view of device **10** along line 3-3 in Figure 1, balloon **12** of stenotic dilatation device **10** is shown in a deflated configuration prior to insertion into a blood vessel. Balloon **12** will also assume this configuration after incisions are made in a stenosis and preparatory to removal of device **10** from the vessel. As shown in Figure 3B, when balloon **12** is deflated, each atherotome **28** mounted on outer surface **18** of balloon **12** is still aligned along the longitudinal axis of catheter **14** and is circumferentially equidistant from each adjacent atherotome **28**. As further shown in Figure 3B, on deflation of balloon **12**, outer surface **18** of balloon **12** is reconfigured and a plurality of creases **38a**, **38b**, **38c** are formed on outer surface 18 of balloon 12, which result in a plurality of concave sides **40a**, **40b**, **40c**. In pairs these concave sides **40a,b,c** form flaps **42a**, **42b**, **42c** which are actually folds in the surface of the balloon **12** between creases **38a**, **38b**, **38c** respectively. Thus, upon retraction of atherotomes **28a**, **28b**, **28c**, toward the longitudinal axis of catheter **14** during deflation of balloon **12**, each pair of the flaps **42a**, **42b**, **42c**, in balloon **12** straddle one of the atherotomes **28a**, **28b**, **28c**. Flaps **42a**, **42b**, **42c** are shown to extend substantially the entire length of balloon **12** between distal annulus **15a** and proximal annulus **16b**, to shield the lumen of an artery from contact with cutting edges **32** of the atherotomes **28**.

Referring now to Figure 5, an alternate embodiment of the present invention incorporates a dual lumen catheter which is shown and generally designated **50**. As shown, dual lumen catheter **50** includes an inner catheter **52** which is coaxially aligned inside an outer catheter **54**. Importantly, inner catheter **52** has a central lumen **56** which extends the length of dual lumen catheter **50** for receiving

a guide wire therethrough. Further, the outer diameter of inner catheter **52** is sufficiently shorter than the inner diameter of outer catheter **52** to establish a fluid lumen **58** between the coaxial catheters **52** and **54**. This fluid lumen **58** terminates at a port **60** which is located inside balloon **12**. Figure 5 also shows that the proximal tapered end **22b** of balloon **12** is attached to the outer surface of outer catheter **54**, and that the distal tapered end **22a** of balloon **12** is attached to the outer surface of inner catheter **52**. Consequently, with a fluid tight seal between distal tapered end **22a** and catheter **52** there can only be fluid communication with balloon **12** through fluid lumen **58**.

OPERATION

In the operation of stenotic dilitation device **10**, reference is made to Figures 4A and 4B. Initially, balloon **12** is deflated while positioned at the stenosis **44** within artery **46** as shown in Figure 4A. Positioning of device **10** is performed in accordance with well-known surgical techniques and may employ a guide wire (not shown) threaded through catheter **14** as discussed above in conjunction with Figure 5.

Once stenotic dilation device **10** is in place at stenosis **44**, it is inflated as shown in Figure 4B by infusion of fluids from a fluid source (not shown) into balloon **12** through catheter **14** and ports **36a**, **36b**. Inflation of balloon **12** causes cutting edge **31** in each atherotome **28a**, **28b**, **28c** to incise stenosis **44**. This relieves some stress on the wall of artery **46** while dilating stenosis **44**. The incisions made in stenosis **44** correspond in length to the length of atherotomes **28a**, **28b**, **28c** and are predetermined to be shallower than the wall of artery **46** so as not to penetrate through artery **46**. After balloon **12** incises and dilates stenosis **44**, it is deflated by withdrawing fluid from balloon **12** under vacuum through

catheter **14** and ports **36a, 36b.** Stenotic dilitation device **10** is then removed from artery **46.**

While the particular stenotic dilitation device as herein shown and disclosed in detail is capable of obtaining the objects and providing the advantages hereinbefore stated, it is understood that this particular treatment device is merely illustrative of presently preferred embodiments of the invention. It is further understood that the present invention is not intended to be so limited and that other embodiments are further possible within the scope of the present invention.

The claims defining the invention are as follows:

1. An angioplasty device for dilating a stenosis in a blood vessel comprising:

a catheter having a distal end and a proximal end;

a flexible and substantially cylindrical balloon membrane having an inner surface, an outer surface, a distal end, and a proximal end, said distal end of said balloon membrane being attached near the distal end of said catheter, and said proximal end of said balloon membrane being attached to said catheter at a distance proximal from the distal end of said catheter to said catheter;

a plurality of atherotomes each said atherotome comprising a cutting structure with a base, each said base being embedded in a substrate mounted on the outer surface of said balloon membrane and aligned along the longitudinal axis of said catheter; and

wherein said balloon membrane is adapted to form flaps when deflated to protect a blood vessel wall from said atherotomes.

2. A device as recited in claim 1, wherein said catheter is in fluid communication with said balloon membrane through fluid ports formed in said catheter between said distal end and said proximal end of said balloon membrane.

3. A device as recited in claim 1, wherein each of said atherotome comprises a blade-like structure with a base, and said base is embedded in a substrate.

4. A device as recited in claim 1, wherein said blade-like structure and base is formed from metal.

5. A device as recited in claim 3, wherein said structure is formed having step extensions in the base of each said structure for permanently embedding said structure in said substrate.

AUSTRALIAN PATENT OFFICE RB

6. A device as recited in claim 3, wherein said structure is formed having a plurality of semi-circular grooves formed into the base of said structure to enhance longitudinal flexibility of said structure.

7. A device as recited in claim 1 wherein said atherotomes are permanently mounted to said outer wall of said balloon membrane.

8. A device as recited in claim 7 wherein each said atherotome is permanently mounted on said outer surface of said balloon membrane with an adhesive bond applied to the outer surface of said balloon membrane, in patches substantially codimensional with the substrate surface to be attached to said outer surface of said balloon membrane.

9. A device as recited in claim 3, wherein said substrate is formed from a resinous material.

10. A device as recited in claim 3, wherein said substrate is made of polyurethane.

11. A device as recited in claim 1, wherein said plurality of said atherotomes consists of three or more of said atherotomes.

12. A device as recited in claim 1, wherein a plurality of flaps is formed in said balloon between said adjacent atherotomes when said balloon membrane is deflated.

13. A device as recited in claim 1 wherein each said atherotome is circumferentially equidistant from each adjacent said atherotome.

14. An angioplasty device for dilating a stenosis in a blood vessel, comprising:

a balloon membrane having a substantially cylindrical shape when inflated and forming a plurality of concave sides when deflated;

a plurality of atherotomes, each of said atherotomes having a blade-like structure embedded in a substrate with a cutting edge of the structure protruding from said substrate, said substrate being mounted on the outer surface of said balloon membrane to align said atherotome along the longitudinal axis of said balloon and circumferentially position said atherotomes equidistant from each adjacent said atherotome;

a plurality of creases formed in the surface of said balloon membrane to form flaps in said balloon membrane when said balloon membrane is deflated each crease being in substantially parallel alignment with the longitudinal axis of said balloon to provide an attachment point for one said atherotome and position said atherotome between said flaps; and

a catheter in fluid communication with said balloon membrane for inflating/deflating the balloon membrane.

15. An angioplasty device as recited in claim 14, wherein said structure is formed having step extensions in the base of each said structure for permanently embedding said structure in said substrate.

16. An angioplasty device as recited in claim 15, wherein said structure is formed having a plurality of semi-circular grooves in the base of said structure.

17. An angioplasty device as recited in claim 14, wherein said substrate is made of polyurethane.

RB

18. A method for using an angioplasty device for dilating a stenosis in a blood vessel which comprises the steps of:

inserting said device into said blood vessel, said device comprising a catheter having a distal end and a proximal end, a flexible and substantially cylindrical balloon membrane having an inner surface, an outer surface, a distal end, and a proximal end, said distal end of said balloon membrane being attached near the distal end of said catheter, and said proximal end of said balloon membrane being attached at a distance proximal from the distal end of said catheter to said catheter, and a plurality of atherotomes each having a cutting edge structure with a base, each said base being embedded in a substrate mounted on the outer surface of said balloon membrane and aligned along the longitudinal axis of said catheter with said cutting edges oriented radially outwardly from said catheter;

positioning said balloon membrane of said device across said stenosis;

inflating said balloon membrane to urge said cutting edges of said atherotomes into said stenosis and to simultaneously dilate said stenosis;

deflating said balloon to form a plurality of flaps adapted to protect a blood vessel wall from said atherotomes; and

withdrawing said device from said blood vessel.

19. A method as recited in claim 18 wherein each said atherotome is circumferentially equidistant from each adjacent said atherotome.

AUSTRALIAN PATENT OFFICE KB

20. A method as recited in claim 18 wherein said catheter is in fluid communication with said balloon membrane through fluid ports formed in said catheter between said distal end and said proximal end of said balloon membrane, and wherein each said atherotome comprises a blade-like structure with a base, and said base is embedded in a substrate, said substrate being attachable to said balloon.

21. A method as recited in claim 18 wherein a plurality of flaps is formed in said balloon between said adjacent atherotomes when said balloon membrane is deflated.

22. An angioplasty device substantially as hereinbefore described with reference to Figs. 1, 2A, and 3A to 4B, or 2B or 2C of the accompanying drawings.

23. A method for using an angioplasty device, said method being substantially as described herein with reference to Figs. 1, 2A and 3A to 4B, or 2B or 2C of the accompanying drawings.

DATED this Twenty-sixth Day of February 1996

InterVentional Technologies, Inc.

Patent Attorneys for the Applicant

SPRUSON & FERGUSON

Stenotic Dilitation Device

Abstract

A stenotic dilitation device (10) includes a plurality of elongated atherotomes (28a, 28b) with cutters mounted on the outer surface (18) of a flexible balloon (12) along predetermined crease lines. The atherotomes (28a, 28b) are aligned along the longitudinal axis of the catheter (14). The ends (22a, 22b) of the balloon (12) are attached to a hollow catheter tube (14) over fluid ports in the catheter which establish fluid communication between the catheter (14) and the internal chamber of the balloon (12). Fluid flow into and out of the chamber will inflate and deflate the balloon (12). When the balloon (12) is deflated, retraction of the atherotomes (28a, 28b) toward the longitudinal axis of the catheter (14) causes the creases and lines to form flaps of the balloon (12) membrane material between adjacent atherotomes (28a, 28b). In such deflated configuration, the flaps, rather than the cutters of the atherotomes (28a, 28b), contact the vessel wall as the device is manipulated into position adjacent a stenotic site. On inflation of the balloon (12) at the stenotic site, the atherotomes (28a, 28b) are urged against the stenosis to incise the stenosis. The incisions relieve pressure in the wall of the vessel and thus enhance dilation of the vessel by the balloon (12). After dilation, the balloon (12) is deflated and the device (10) is removed.

Figure 1

04 10 92 26313

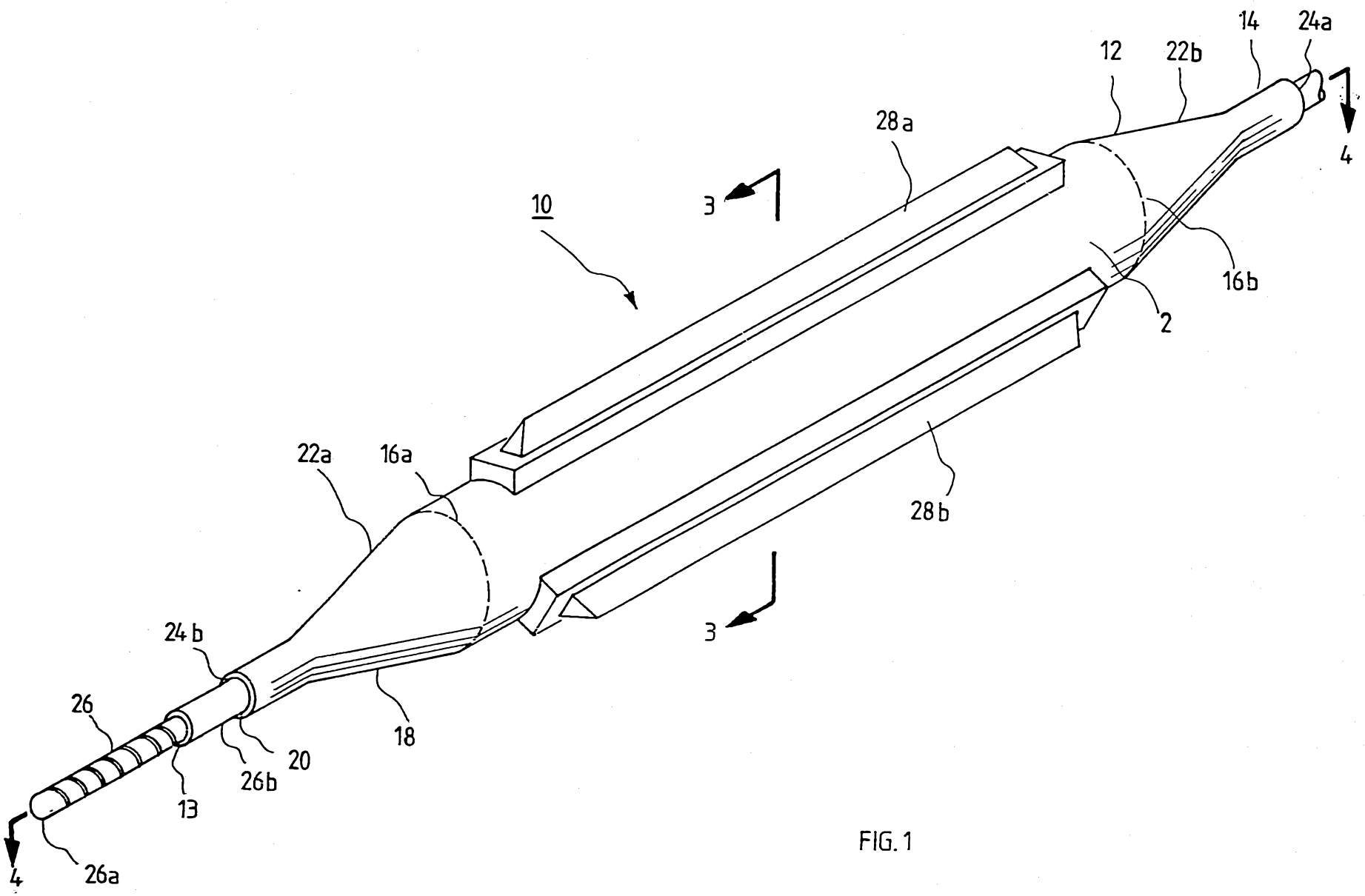

FIG. 1

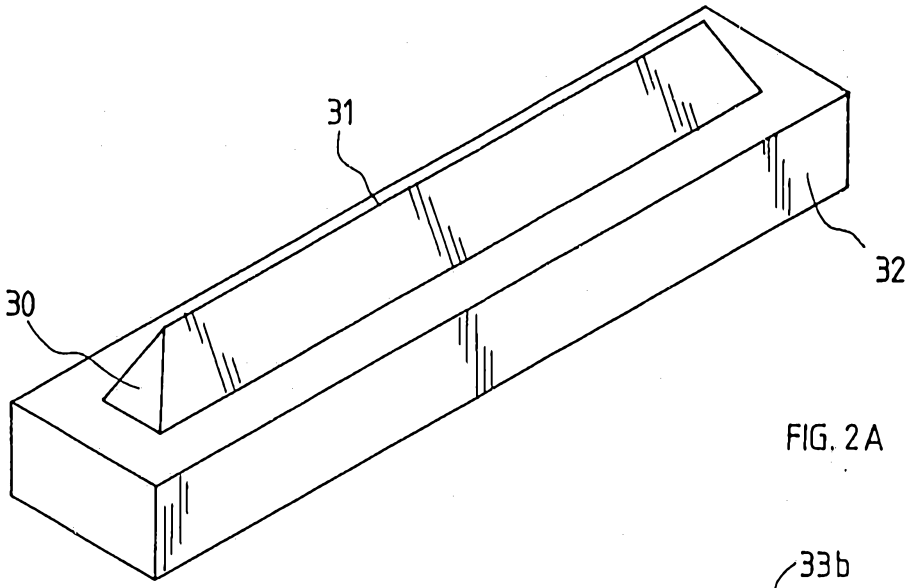

FIG. 2 A

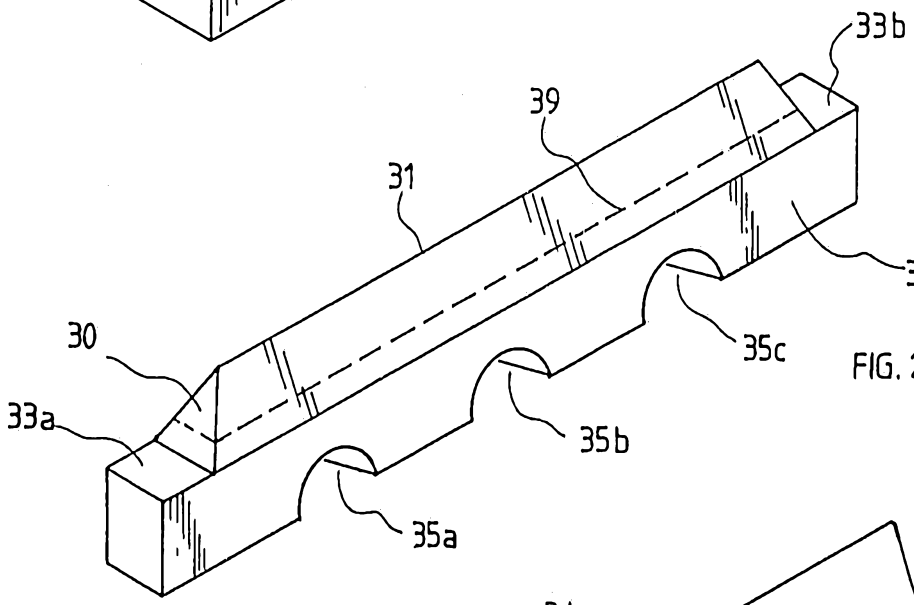

FIG. 2 B

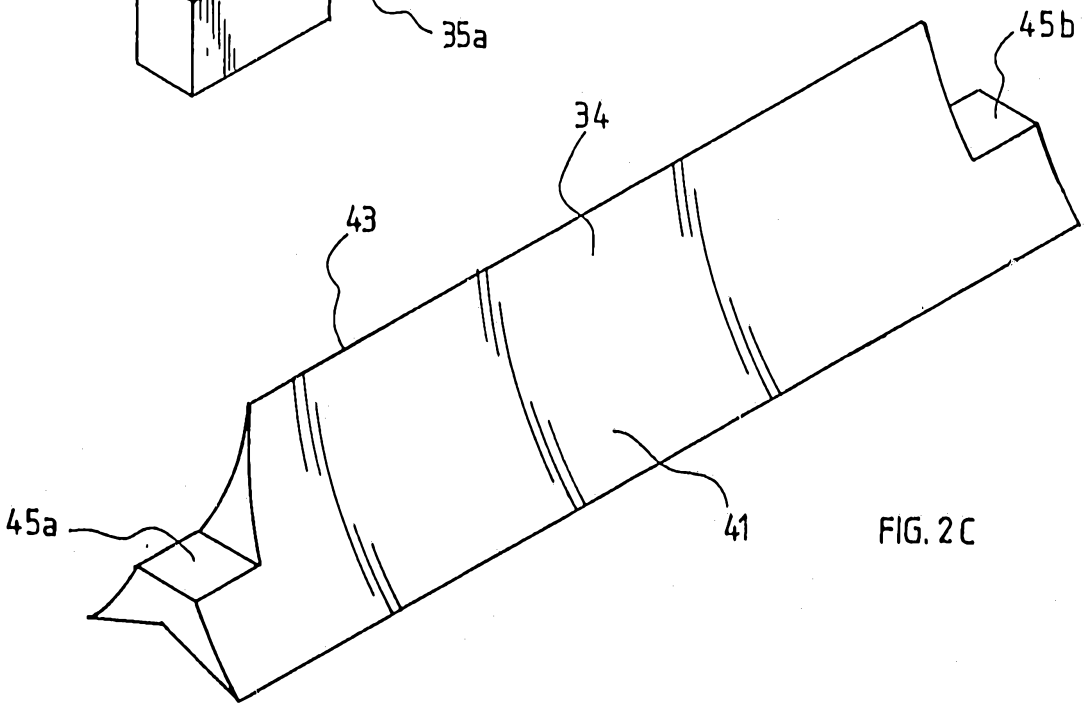

FIG. 2 C

26313/92

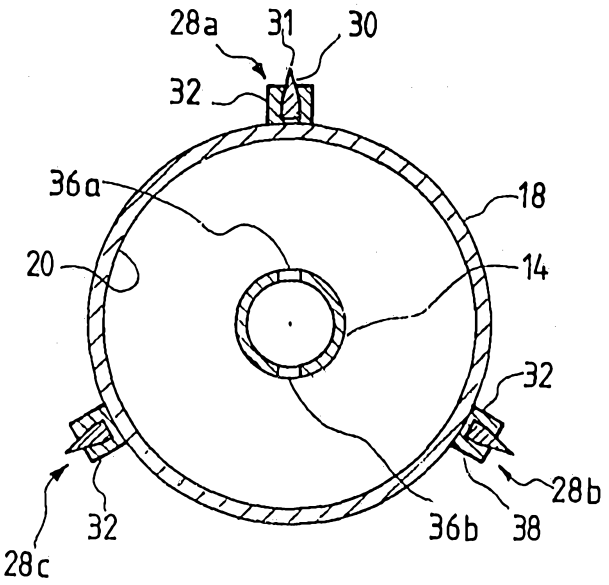

FIG. 3A

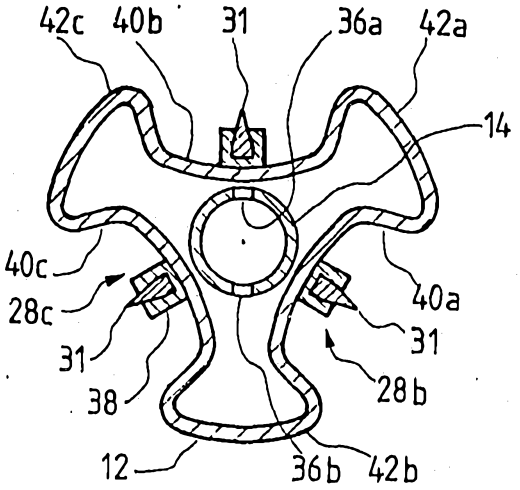

FIG. 3 B

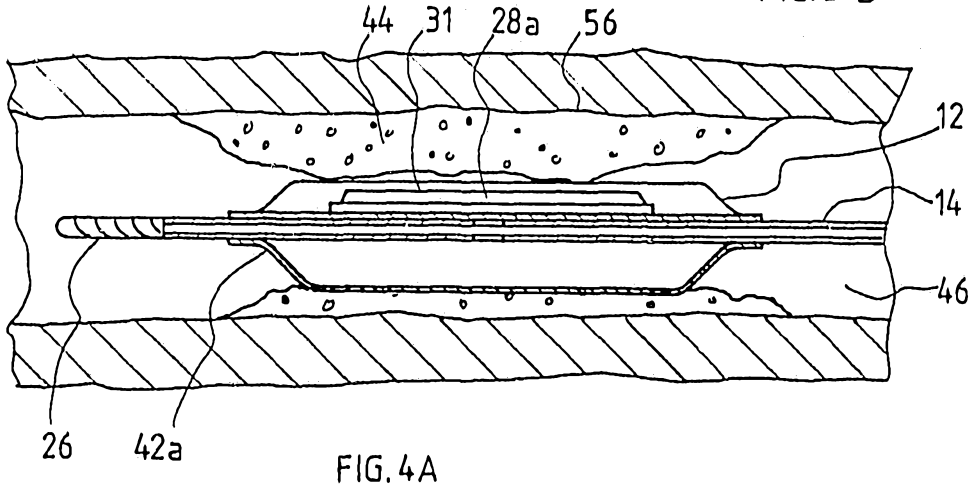

FIG. 4A

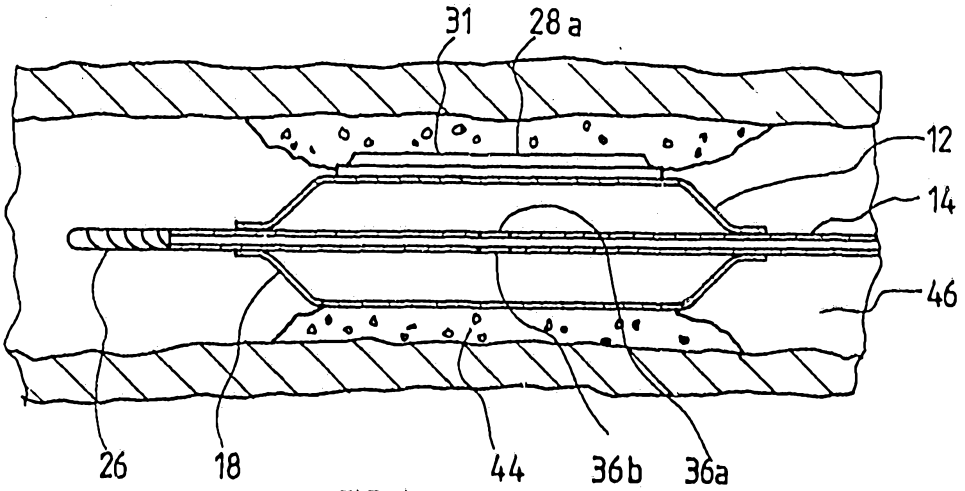

FIG. 4B

04 10 92 28313

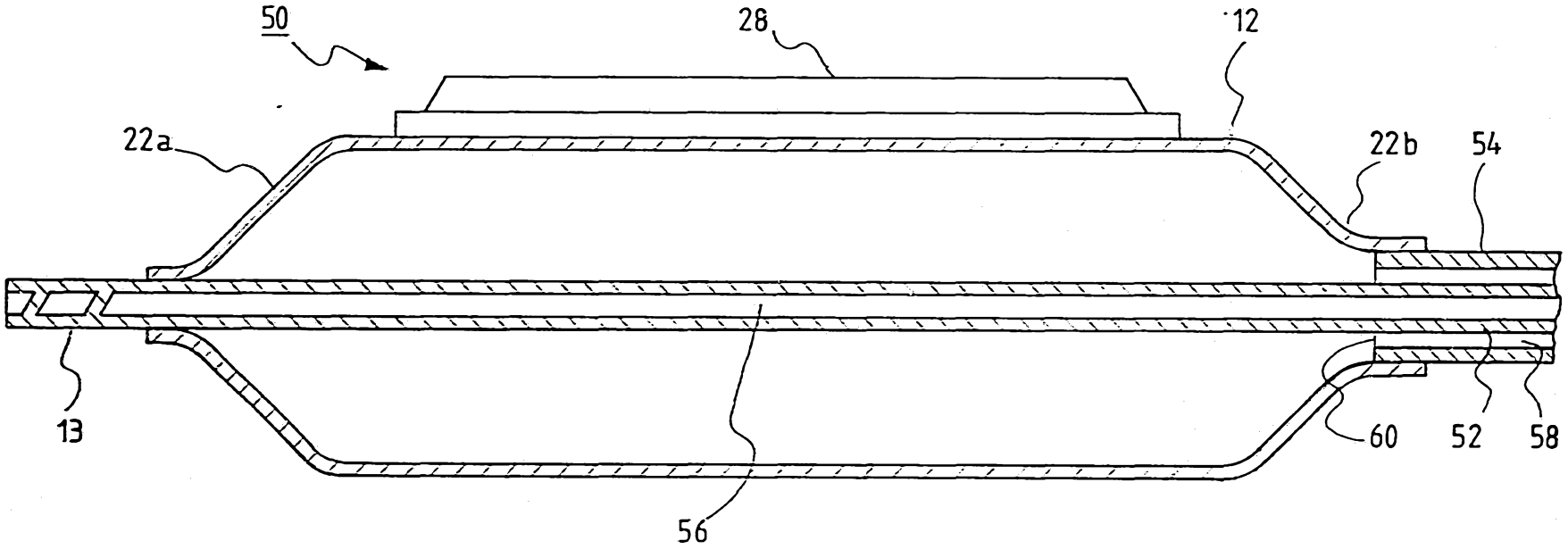

FIG.5