June 19, 1956 B. H. SELTZMAN 2,751,227

RACING GAME

Filed March 14, 1955 6 Sheets-Sheet 1

FIG. 1.

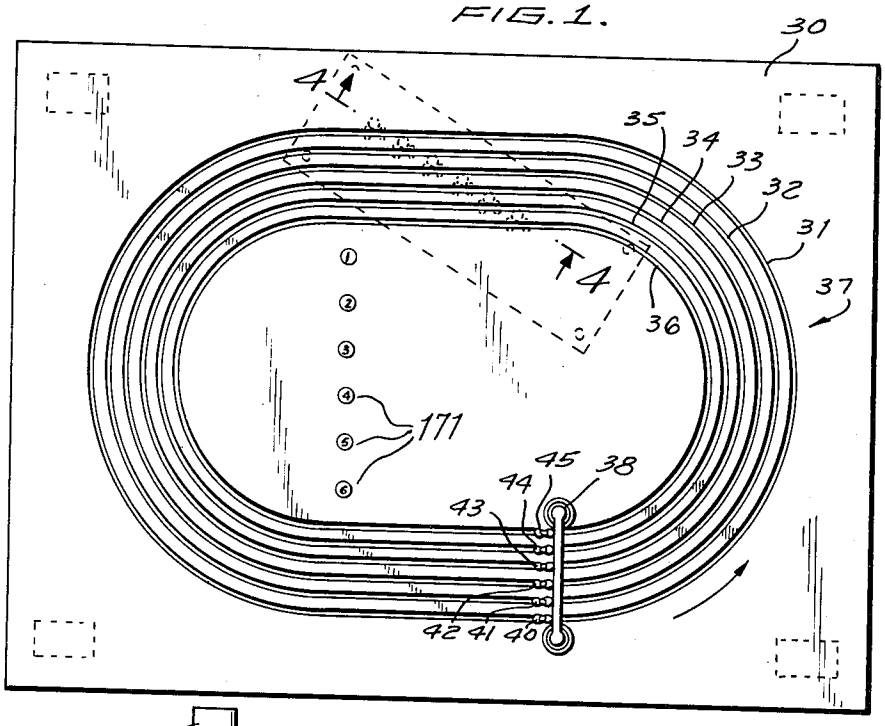

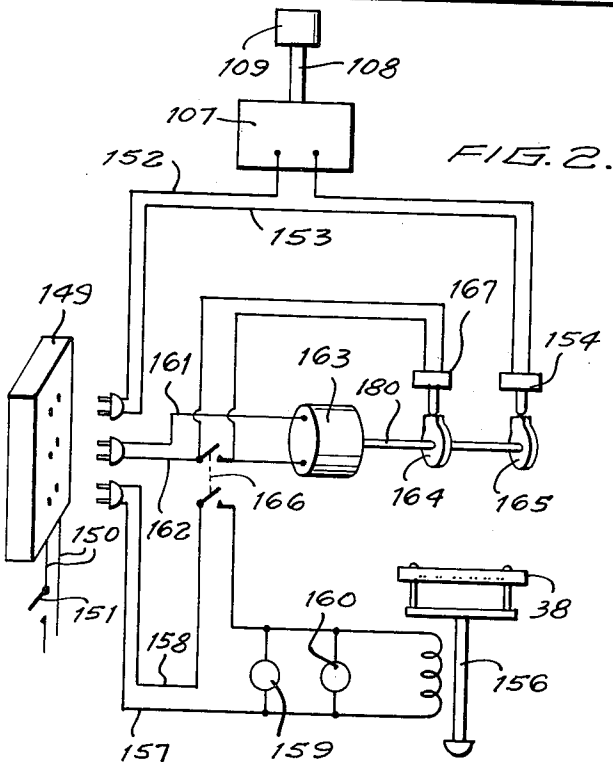

FIG. 2.

FIG. 3.

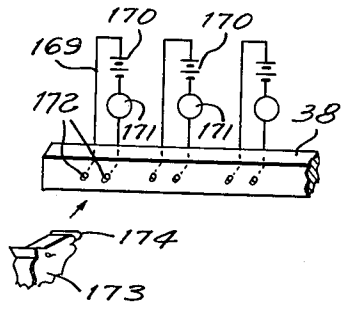

INVENTOR.
BENJAMIN H. SELTZMAN
BY
Percy Freeman
ATTORNEY

June 19, 1956 B. H. SELTZMAN 2,751,227

RACING GAME

Filed March 14, 1955 6 Sheets-Sheet 2

FIG. 4.

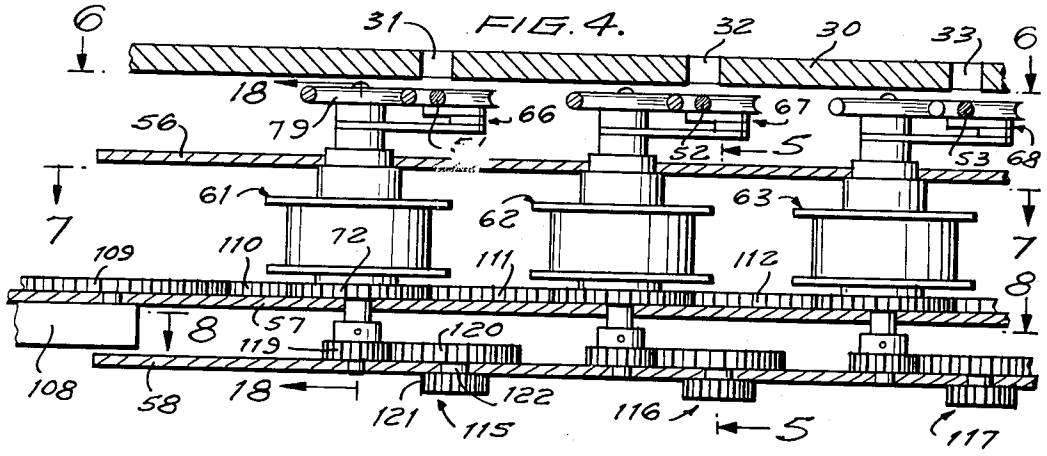

FIG. 5.

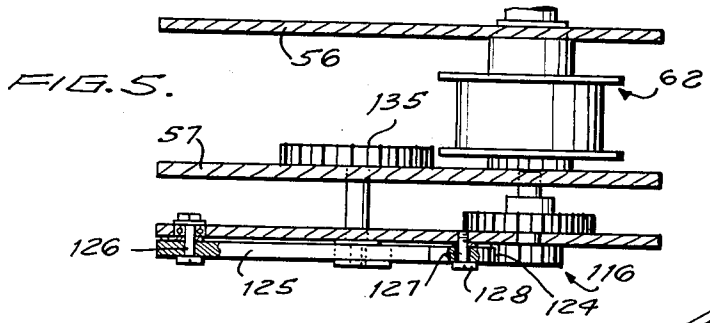

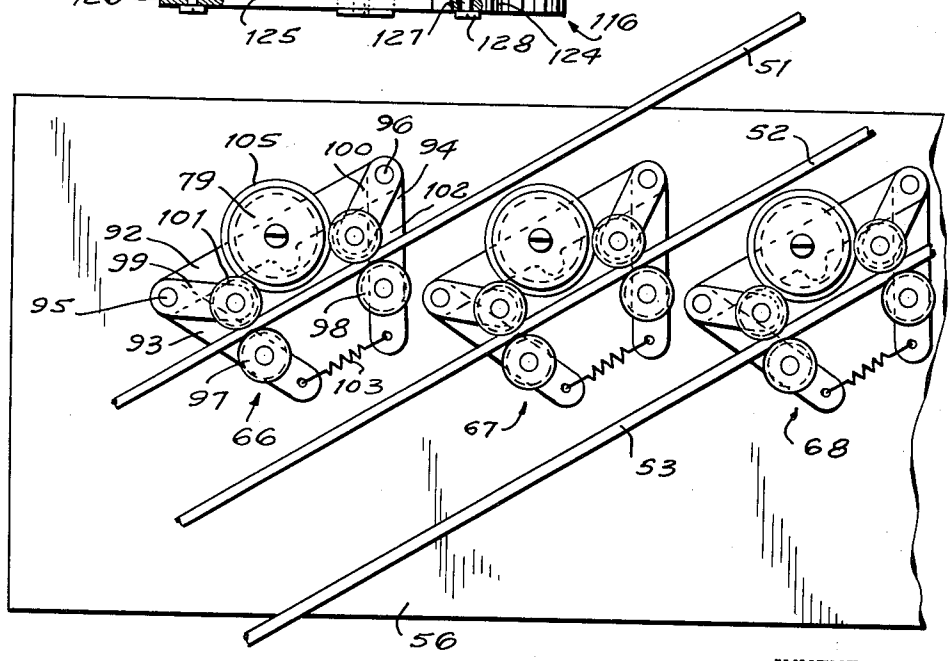

FIG. 6.

INVENTOR.
BENJAMIN H. SELTZMAN
BY
Burgess Freeman
ATTORNEY

June 19, 1956 B. H. SELTZMAN 2,751,227

RACING GAME

Filed March 14, 1955 6 Sheets-Sheet 3

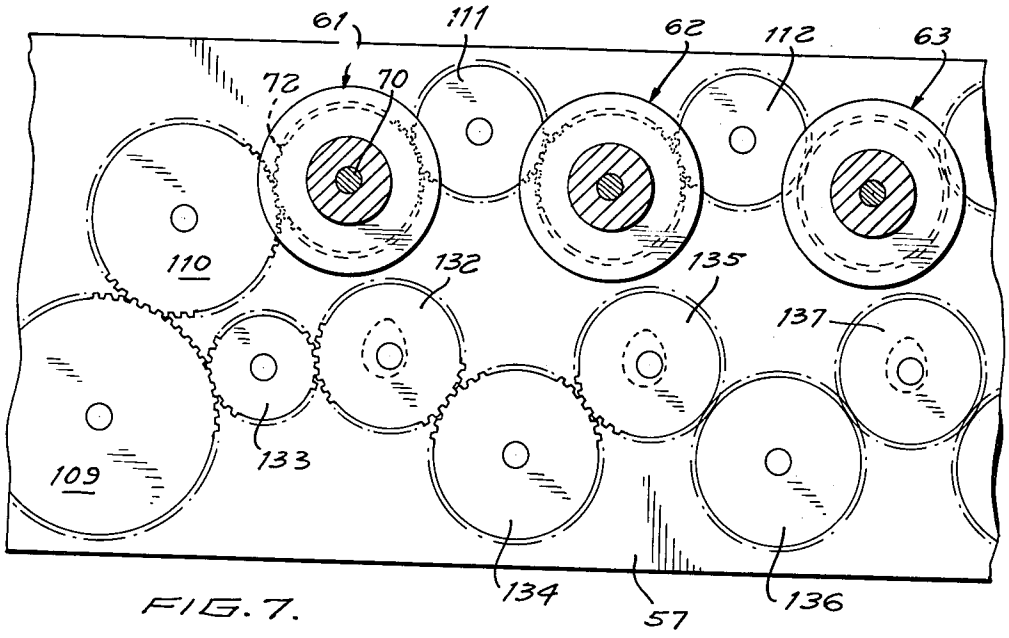

FIG. 7.

FIG. 8.

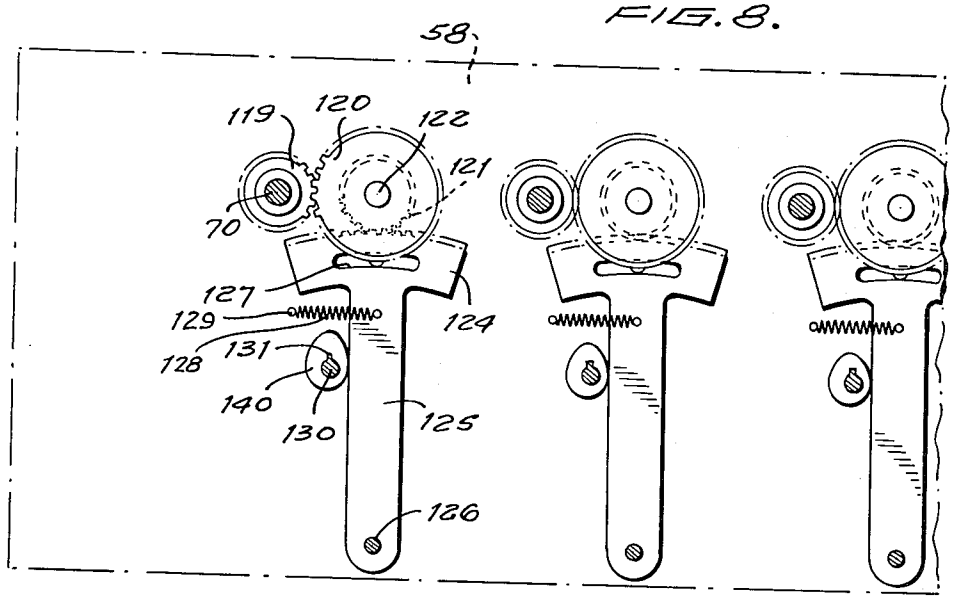

INVENTOR.
BENJAMIN H. SELTZMAN
BY
ATTORNEY

June 19, 1956 B. H. SELTZMAN 2,751,227

RACING GAME

Filed March 14, 1955 6 Sheets-Sheet 4

FIG. 9.

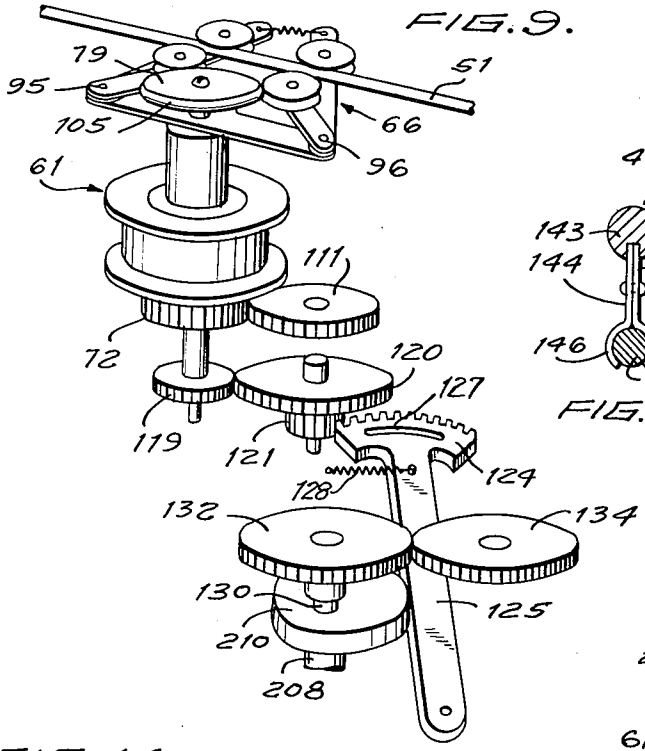

FIG. 10.

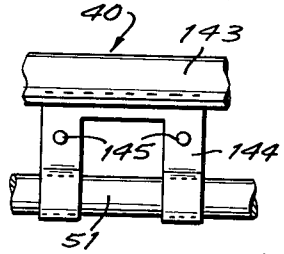

FIG. 11

FIG. 12.

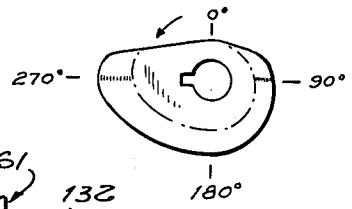

FIG. 14.

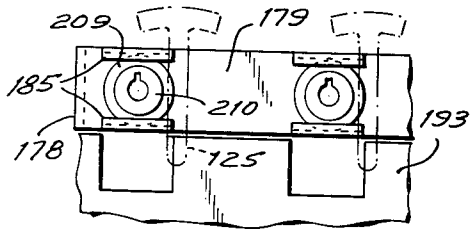

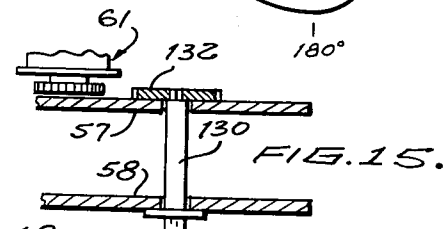

FIG. 15.

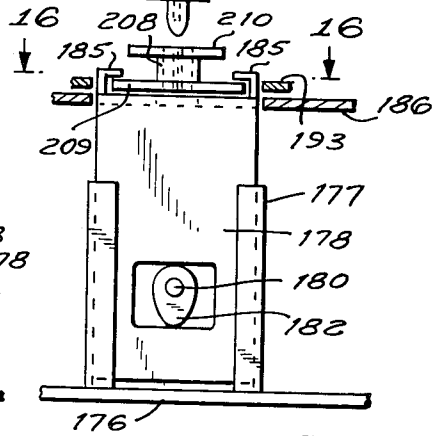

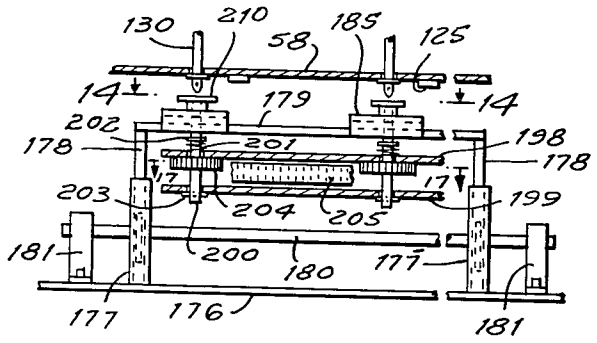

FIG. 13.

INVENTOR.
BENJAMIN H. SELTZMAN
BY
Percy Freeman
ATTORNEY

June 19, 1956 B. H. SELTZMAN 2,751,227

RACING GAME

Filed March 14, 1955

6 Sheets-Sheet 5

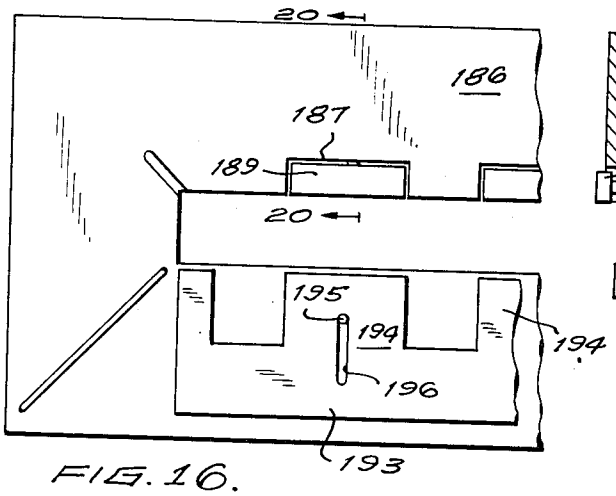

FIG. 16.

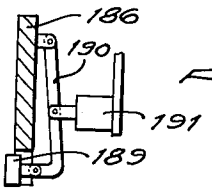

FIG. 20.

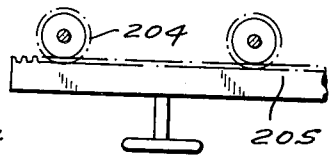

FIG. 17.

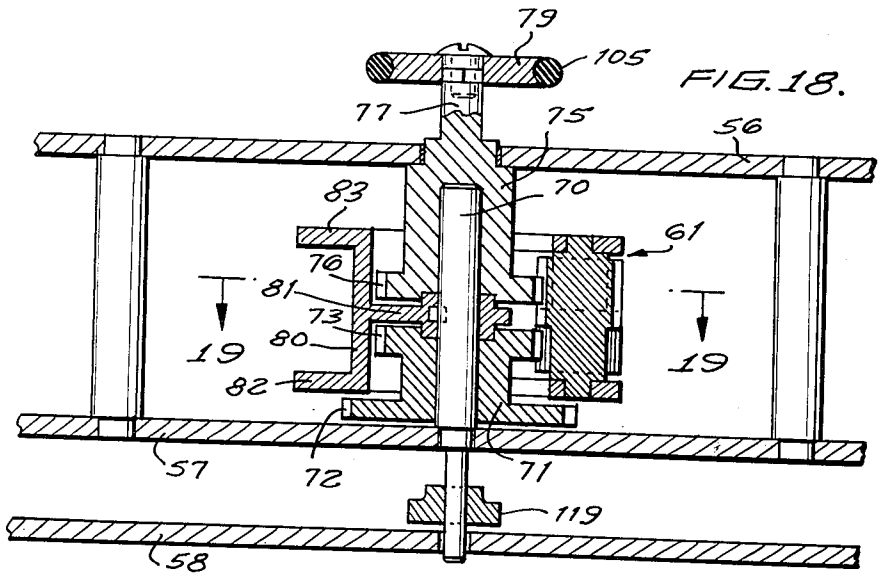

FIG. 18.

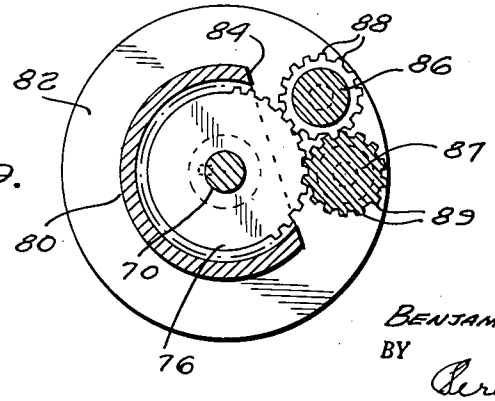

FIG. 19.

INVENTOR.
BENJAMIN H. SELTZMAN
BY
Perez Freeman
ATTORNEY

June 19, 1956 B. H. SELTZMAN 2,751,227

RACING GAME

Filed March 14, 1955 6 Sheets-Sheet 6

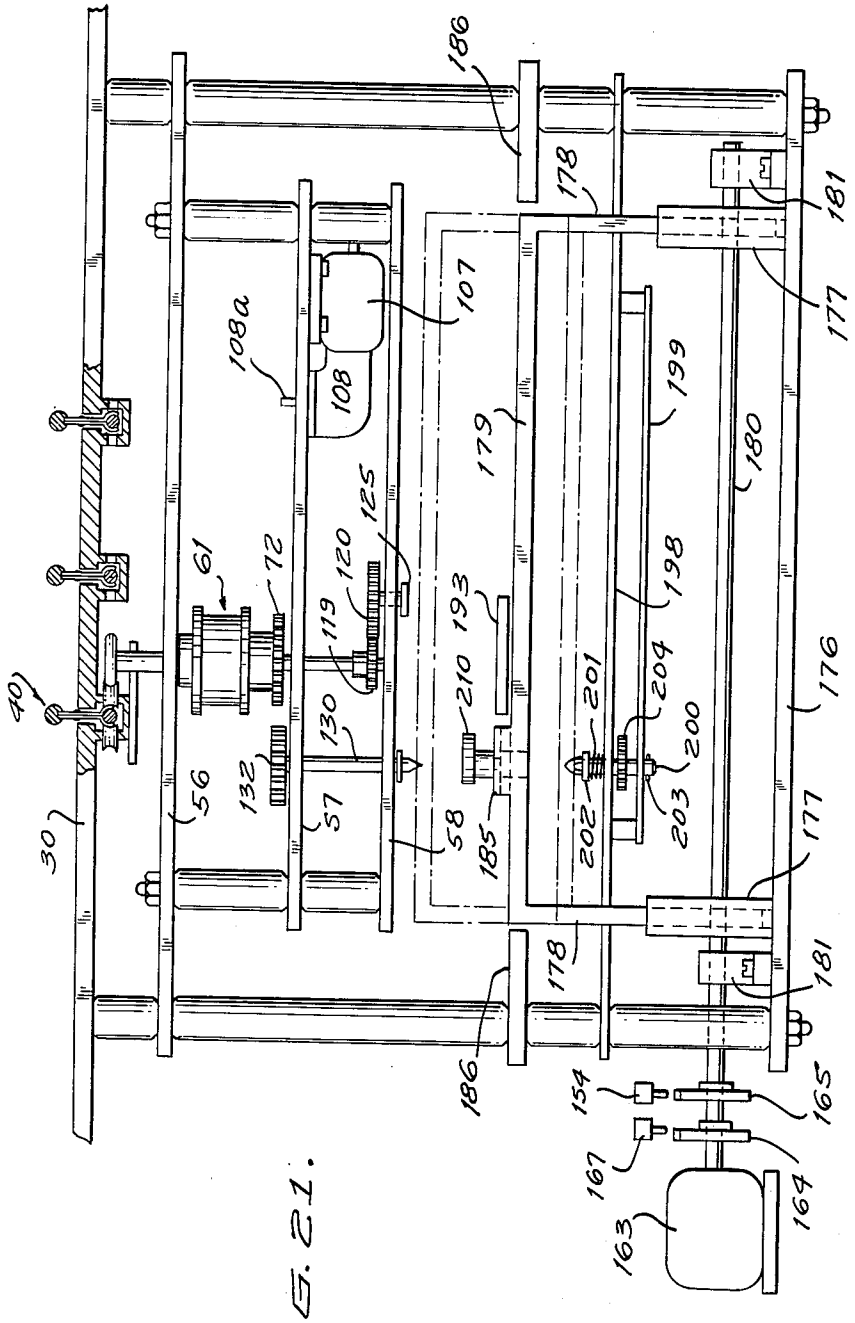

FIG. 21.

INVENTOR
BENJAMIN H. SELTZMAN
BY Bert Freeman
ATTORNEY

United States Patent Office

2,751,227

Patented June 19, 1956

2,751,227

RACING GAME

Benjamin H. Seltzman, New Hyde Park, N. Y.

Application March 14, 1955, Serial No. 494,104

5 Claims. (Cl. 273—86)

This invention relates generally to amusement devices or games, and is particularly directed to a highly improved table type racing game.

The particular embodiment of the present invention, which is illustrated in the drawings and which will be described hereinafter in greater detail, comprises generally a playing surface or table simulating a race course or track, haul means movable along the track for carrying elements representing the contestants, such as horses, cars, boats or the like, means for driving each of the racing elements, and means for controlling the speed of the racing elements according to the laws of probability.

While there have in the past been various types of racing game devices, such devices have been subject to numerous difficulties. One common failing of the prior art racing games was the lack of compensation for different lengths of paths traveled by the racing elements over an oblong track or loop. This, of course, handicapped the outer track positions, and rendered unequal the probability of the different elements winning. Also, it was heretofore considered necessary to employ operating mechanisms which were readily subject to wear and malfunctioning, thus further adversely affecting the equal probabilities of winning of the different contestants. More particularly, the operating mechanisms of prior art devices were not positively driven, but usually involved considerable relative sliding which caused uneven wear and resulted in frequent breakdowns of the device. In addition, the previous racing game devices were complex in construction, difficult to operate, and expensive to manufacture and maintain.

Accordingly, it is a general object of the present invention to provide a racing game device of the type described which overcomes the above-mentioned difficulties, which is extremely easy and safe to operate and enjoyable to play, being capable of unsupervised use by relatively small children, and wherein the probabilities of the different contestants winning are equal and remain equal for the useful life of the device. That is, the device of the instant invention is not subject to wear liable to change the probabilities of winning of the various racing elements. More particularly, the racing elements are positively driven and not dependent upon the variable results of relative sliding movement.

It is a further object of the present invention to provide a racing game having the advantageous characteristics mentioned in the foregoing paragraph, which is simple and durable in construction, reliable in use and requires a minimum of maintenance. In addition, the instant device is capable of being completely power driven, well adapted for coin slot operation, and can be manufactured and sold at a reasonable cost.

Other objects of the present invention will become apparent upon reading the following specification and referring to the accompanying drawings, which form a material part of this disclosure.

The invention accordingly consists in the features of

construction, combinations of elements, and arrangements of parts, which will be exemplified in the construction hereinafter described, and of which the scope will be indicated by the appended claims.

In the drawings:

Fig. 1 is a top plan view showing a racing game constructed in accordance with the present invention.

Fig. 2 is a schematic illustration of the electrical system of the game device.

Fig. 3 is a partial perspective view showing a starting gate and electrical signal means associated therewith.

Fig. 4 is a partial, sectional elevational view taken substantially along the line 4—4 of Fig. 1.

Fig. 5 is a partial, sectional elevational view taken substantially along the line 5—5 of Fig. 4.

Fig. 6 is a partial, horizontal sectional view taken substantially along the line 6—6 of Fig. 4.

Fig. 7 is a partial, horizontal sectional view taken substantially along the line 7—7 of Fig. 4.

Fig. 8 is a partial, horizontal sectional view taken substantially along the line 8—8 of Fig. 4.

Fig. 9 is a perspective view showing the operating elements of the present invention apart from their mounting structure.

Fig. 10 is a transverse sectional view showing a racing element attached to its haul means or cable.

Fig. 11 is a partial, side elevational view showing the racing element and haul means.

Fig. 12 is a plan view showing a pair of information or control cam contours in superposed relation, one being shown in dot-and-dash lines.

Fig. 13 is a side elevational view, partly in section, showing means for mounting and removing the information cams with respect to the operating mechanism.

Fig. 14 is a horizontal sectional view taken substantially along the line 14—14 of Fig. 13.

Fig. 15 is an end elevational view showing the cam mounting and removing mechanism of Fig. 13, somewhat enlarged.

Fig. 16 is a partial, horizontal sectional view taken substantially along the line 16—16 of Fig. 15.

Fig. 17 is a partial horizontal sectional view taken substantially along the line 17—17 of Fig. 13.

Fig. 18 is a vertical sectional view, somewhat enlarged, taken substantially along the line 18—18 of Fig. 4.

Fig. 19 is a horizontal sectional view taken substantially along the line 19—19 of Fig. 18.

Fig. 20 is a vertical sectional view taken substantially along the line 20—20 of Fig. 16.

Fig. 21 is an elevational view, partly broken away and showing, in assembled relation, the operating elements and cam mounting and removing means of the instant device, with parts removed for clarity of understanding.

Referring now more particularly to the drawings, and specifically to Fig. 1 thereof, the embodiment of the invention illustrated therein comprises a horizontally disposed board or table 30 providing a playing surface, and formed with a plurality of generally oval-shaped slots 31, 32, 33, 34, 35 and 36 extending in substantial parallelism one within the other, and defining a racing course or track generally designated 37. A starting gate, generally designated 38, is mounted on the table 30 extending transversely across the track 37; and, a plurality of simulated contestants or racing elements 40, 41, 42, 43, 44 and 45 are located respectively in the slots 31–36 for movement therealong about the track 37.

A plurality of flexible, endless haul cords or cables are arranged in generally ovaloid configuration each directly below one of the slots 31–36 respectively, and there supported by rollers or other suitable means (not shown) for longitudinal movement along the paths of their re-

spective slots. Three of such haul cords are partially illustrated in Fig. 6 at **51**, **52** and **53**, corresponding to the slots **31**, **32**, and **33**.

A plurality of mounting plates **56**, **57** and **58** are disposed substantially horizontally beneath the playing table **30** and fixed relative thereto in spaced, superposed relation. A plurality of generally vertically disposed differential drive elements or cyclic gear trains are supported between the upper mounting plate **56** and the intermediate mounting plate **57**, each adjacent to one of the slots **31–36**, respectively. Three of the differential gear trains or drive units **61**, **62** and **63** are illustrated in Fig. 4 adjacent to the slots **31**, **32** and **33**, respectively. Associated with each drive element is a mechanism for supporting a portion of the adjacent haul cord and effecting movement of the latter about its ovaloid path. That is, the pulley mechanisms generally designated **66**, **67** and **68** in Figs. 4 and 6, are disposed above the upper mounting plate **56** and carried respectively by the upper portions of differential drive units **61**, **62** and **63** for moving the haul cords **51**, **52** and **53**.

Each of the differential drive elements is substantially identical to the drive element **61**, so that a detailed description of the latter, shown in Figs. 18 and 19, will suffice. The cyclic or differential gear train **61** includes a vertically disposed shaft **70** rotatably supported intermediate its ends by the intermediate mounting plate **57** and having its lower end portion journaled in the lower mounting plate **59**. An input gear **71** is coaxially circumposed about the vertical shaft **70**, just above the intermediate mounting plate **57**, and freely rotatable relative to the shaft. A lower set of external teeth **72** is formed on the gear **71** adjacent to the mounting plate **56**; and, an upper set of external teeth **73**, of lesser number than the lower set, is also formed on the input gear. Rotatably journaled on the upper portion of the vertical shaft **70**, coaxially with the input gear **71**, is an output gear **75**, which has its lower end portion provided with a set of external teeth **76** and its upper end portion **77** extending rotatably through and upwards beyond the upper mounting plate **56**. A pulley-like friction wheel **79** is fixed to the upwardly extending portion **77** of the output gear **75**, coaxially thereof, for driving engagement with the haul cord supporting mechanism **66** as will appear more fully hereinafter.

A generally vertically cylindrical housing **80** is spacedly circumposed about the input and output gears **71** and **75**, above the input gear teeth **72**, and provided intermediate its ends with a generally horizontal web **81** extending between the input and output gears and keyed to the shaft **70**. In this manner, the housing **80** is mounted for rotation relative to the input and output gears, coaxially thereof. On the lower and upper ends, respectively, of the vertically disposed cylindrical housing **80** are provided external peripheral flanges **82** and **83**, and the housing is cut away or open laterally, as at **84**, between the flanges and in the region of the gear teeth **73** and **76**.

The differential gear train **61** also includes intermediate, transmitting gears **86** and **87** in meshing engagement with each other and mounted in the housing flanges **82** and **83** adjacent to the housing opening **84** for rotation about parallel vertical axes. More specifically, the intermediate gear **86** has its lower and upper ends journaled, respectively, in the housing flanges **82** and **83** for rotation about a vertical axis, which axis is revolvable about the axis of the shaft **70**. The lower portion of the gear **86** is provided with gear teeth **88** which mesh with the input gear teeth **73**, and the upper portion of the intermediate gear **86** is spaced from the input and output gears. The intermediate gear **87** similarly has its lower and upper ends journaled in the housing flanges **82** and **83** for rotation about a vertical axis parallel to that of the intermediate gear **86** and also revolvable about the shaft **70**. However, the intermediate gear **87** is provided on its upper portion with gear teeth **89** which mesh with the teeth **76** of the output gear, and has its lower portion clear of the input gear **71**. In the region between the input gear teeth **73** and the output gear teeth **76**, the lower and upper gear teeth **88** and **89** of the intermediate gears **86** and **87**, respectively, overlap and are in meshing engagement with each other, as best seen in Fig. 19. If the housing **80** is locked or held fast, it will now be understood that rotation of the input gear **71** will, through the intermediate gears **86** and **87**, effect rotation of the output gear **75**; and, if the housing is rotated simultaneously with the input gear, a speed differential will be added to or subtracted from the speed of the output gear according to the direction of housing rotation. Hence, in kinematic terminology, the intermediate gears **86** and **87** serve as planetary gears, and the housing **80** serves as an arm for revolving the planetary gears.

The cable driving and supporting mechanisms **66**, **67** and **68** are substantially identical in construction, each being carried by one of the driving elements **61**, **62** and **63**, respectively. The mechanism **66** includes a horizontally disposed elongated member or bar **92** pivotally supported intermediate its ends on the upper portion **77** of the output gear **75**, just below the wheel **79**. That is, the bar **92** is freely rotatable about the axis of the output gear **75**. A pair of relatively long arms **93** and **94** each have one end pivoted to opposite ends of the bar **92**. Stated otherwise, the arm **93** has one end pivoted, as by a vertical pin **95**, to one end of the bar **92**, and the arm **94** has one end pivoted by a vertical pin **96** to the other end of the bar **92**. In operation, the bar **92** is disposed on one side of its respective haul cord **51** (see Fig. 6), and the distal ends of the arms **93** and **94** extend to the other side of the cord. A pair of friction wheels or pulleys **97** and **98** are mounted, respectively, on the arms **93** and **94** remote from the pivoted ends of the latter so as to be on the opposite side of the cord **51** as the bar **92**.

A relatively short arm **99** also has one end pivoted to the pin **95**, and a second relatively short arm **100** has one end pivoted to the pin **96**. On the distal ends of the shorter arms **99** and **100** are rotatably mounted a pair of horizontally disposed pulleys or friction wheels **101** and **102**, which are disposed on the same side of the cord **51** as the bar **92**. A coil tension spring **103** is connected between the distal ends of the longer arms **93** and **94** to yieldably urge the latter towards each other and maintain the friction wheels **97** and **98** in engagement with the cord **51**. Further, the proportions of the relatively short arms **99** and **100** are such that the pulleys **101** and **102** will be normally disposed directly opposite the pulleys **97** and **98**, respectively, and urged by the latter into engagement with the wheel **79** when the cord is in its proper position below the slot **31**. Preferably circumposed about the wheel **79** is an annulus or ring **105**, formed of rubber or other high friction material, for non-slipping engagement with the pulleys or sheaves **101** and **102**.

It will now be appreciated that the pulleys **97** and **98**, being resiliently urged toward the pulleys **101** and **102**, respectively, combine with the latter pulleys to support haul cord **51** in proper position below the slot **31**; while rotation of the wheel **79**, as by operation of the driving element **61**, serves to turn the wheels or pulleys **101** and **102** to effect longitudinal movement of the haul cord. Of course, equivalent haul cord moving means may be employed, as by substituting a ladder cable and toothed wheels or sprockets meshing with the cable in place of the cord and sheaves.

Motive power for operating the differential drive elements is preferably provided by an electric motor schematically illustrated at **107** in Fig. 2, and operatively connected by a gear reduction drive **108**, having a stub shaft **108*a***, to a horizontally disposed motor or power gear **109** rotatably mounted on the plate **57** (see Figs. 4 and 7).

A horizontally disposed idler gear **110**, also rotatably mounted on the plate **57**, is in meshing engagement with both the motor gear **109** and the input gear **71** of the differential gear train **61** to transmit power to the latter. Additional horizontally disposed idlers **111** and **112** are rotatably mounted on the plate **57** for transmitting power to the input gears of the drive elements **62** and **63**, respectively. That is, the idler **111** is in meshing engagement with the input gears of the drive elements **61** and **62**, taking power from the former and transmitting power to the latter, while the idler **112** is in meshing engagement with the input gear of the drive element **62**, taking power therefrom, and meshes with the input gear of the drive element **63**, delivering power thereto. In order that the haul cords **51**, **52**, **53**, and those not shown, may complete an equal number of revolutions about the paths of their respective slots **31—36**, per unit of time, it is necessary to compensate for the different lengths of the slots. This may, of course, be accomplished in various ways, but it is preferred to provide the input gears of the drive elements **61**, **62** and **63** with successively greater numbers of teeth. For example, the input gear of the drive element **61** may have 50 teeth, the input gear of the drive element **62** may have 53 teeth, and the input gear of the drive element **63** may have 56 teeth, depending upon the track length and slot spacing, and all calculated to produce one revolution of the haul cords **51**, **52** and **53** in the same amount of time. Hence, it will now be seen that movements of the various cords are positively compensated for differences in cord and slot lengths.

In order to vary the speeds of the different haul cords, as is necessary to simulate a racing contest, independent control or information means, generally designated **115**, **116** and **117** are associated with the drive elements **61**, **62** and **63**, respectively. The control or information means **115** includes a relatively small information gear **119** disposed horizontally between the intermediate and lower supporting plates **57** and **58** and fixed to the lower portion of the shaft **70** for rotation therewith. The information gear **119** is thus fixed relative to the differential housing **80**. A pair of coaxial gears **120** and **121** are disposed, respectively, above and below the mounting plate **58**, and fixedly connected together by a vertical shaft **122** extending through and journaled in the latter mounting plate. The upper gear **120** is in meshing engagement with the gear **119**, and the lower gear **121** is in meshing engagement with a toothed sector **124** provided on a cam follower or arm **125**. More specifically, the follower or arm **125** is disposed horizontally below the mounting plate **58** and has one end pivotally connected to the latter mounting plate at a point spaced from the gear **121** by a vertically disposed, rotatable pivot pin **126**. The other end of the follower arm **125** is disposed adjacent to the gear **121** and provided with a horizontally disposed, externally toothed arcuate sector **124** having its center of curvature coincident with the pin **126**. The sector teeth are in meshing engagement with the teeth of the gear **121**, and a headed member or screw **128** depends from the underside of the mounting plate **58** through an arcuate slot **127** formed in the sector to limit swinging movement of the follower about the pivot **126** and maintain the follower arm horizontal. Obviously, angular displacement of the follower arm **125** will effect rotation of the drive element shaft **70** and hence of the housing **80**, thereby providing a differential either augmenting or decreasing the motion of the output gear **75**, according to the relative directions of movement.

The control means **115** also includes a vertically disposed cam shaft **130** extending upwards through and beyond the intermediate mounting plate **57** and downwards through and beyond the lower mounting plate **58** alongside of an intermediate portion of the follower arm **125**. The cam shaft **130** is rotatably journaled in the intermediate and lower mounting plates and preferably provided on its lower end portion, below the lower mounting plate, with a rib or key **131**, see Fig. 8. A cam drive gear **132** is disposed horizontally above the intermediate mounting plate **57** and fixed on the upper end of the cam shaft **130**. In meshing engagement with both the motor or power gear **109** and the cam drive gear **132** is a rotary idler gear **133**, adapted to transmit motion from the motor gear to the cam drive gear during operation of the drive elements. An additional rotary idler gear **134** is in meshing engagement with the cam drive gear **135** of the control means **116**, and still another idler gear **136** is in meshing engagement with the cam drive gear **135** and the cam drive gear **137** of the control means **117**. In similar manner, at least one rotary idler gear is in meshing engagement with the cam drive gears of each adjacent pair of control means.

Non-rotatably, but removably secured on the lower end of the cam shaft **130** is an information or control cam **140**. The contoured edge of the control cam **140** bears against the follower arm **125** so as to angularly displace or rotate the latter in response to the configuration of the cam, a tension spring **128** anchored at **129** resiliently maintaining the follower arm against the cam. In practice it has been found satisfactory to gear the cam shaft for less than one revolution, say approximately 270°, during the time necessary for a haul cord to make one revolution without the control means. Hence, the follower arm displacement as effected by the information cam **140** when rotated 270° will determine the differential in haul cord movement over that without the control means; and, of course, the control means employing the cam effecting the greatest follower arm displacement at 270° determines the first haul cord to complete one revolution of the track and hence the winner of a race.

In Figs. 10 and 11 are illustrated the racing element **40** in greater detail. The racing element may, of course, be shaped and decorated to simulate any desired type of contest, but is here illustrated as comprising a generally cylindrical body **143** having a pair of inverted, U-shaped, plate-like members **144**, **144** disposed in facing engagement with each other and having their bight portions imbedded in the underside of the cylindrical body. The U-shaped members are further fixed together by rivets **145** or other suitable securing means, and have the free ends of their legs bowed outwards, as at **146**, **146** for snugly receiving therebetween the cable **51**. That is, the free ends of the legs of the U-shaped members **144—144** are in clamping engagement with the haul cord **51** to maintain the cylindrical body **143** in position on the cord above the slot **31**. The spacing between the legs of each U-shaped member **144** is preferably different from the spacing between the drive sheaves or friction wheels **101** and **102**, to avoid slippage of the racing element on the haul cord when passing through the cord driving mechanism.

The electrical system, as shown in Fig. 2, includes a triple socket **149** or the like adapted to supply electrical energy, and connected by supply lines **150** to a power source. A master switch **151** may be provided in the supply lines, if desired. The main operating motor **107** is connected across the supply lines by conductors **152** and **153**, the latter being provided with a microswitch **154** or other suitable cam actuable switch, for purposes appearing presently. The starting gate **38** is mounted for vertical movement on a solenoid **156** which is connected across the supply lines by conductors **157** and **158**. Visual and audible signal means **159** and **160**, respectively, are preferably connected in parallel with the solenoid.

Also connected across the supply lines **150**, as by the conductors **161** and **162** is a timing motor **163** which drives a pair of cams **164** and **165**. The latter cam is disposed in position to operate the switch **154** upon rotation of the timing motor to energize and de-energize the main operating motor. A double pole, normally open, momentary hold switch **166** is connected in both the conductors **158** and **162** to close and open the solenoid and

timing motor circuits simultaneously. In addition, a suitable switch 167 is arranged to be actuated by the cam 164 and connected in parallel with the conductor 162 on opposite sides of the normally open switch 166. By this arrangement, the cam 164 operates to close the switch 167 and energize the timing motor 163 when the switch 166 is open.

In operation, with the master switch closed, the momentary-hold switch 166 is closed to energize the visual and audible signals 159 and 160, and the solenoid 156, the latter raising the starting gate 38. Momentary closure of the switch 166 also energizes the timing motor 163 to rotate the cams 164 and 165. Rotation of the latter cam closes the switch 154 and energizes the operating motor 107 to effect movement of the haul cords and rotation of the information cams to individually control the speeds of the different cords. The switch 167 is also closed upon rotation of the cam 164 so that the timing motor remains energized, although the switch 166 is open. After the racing elements have passed underneath the gate, the solenoid 156 permits the gate to return to its original position; and, upon substantially one revolution of the cams 164 and 165, which is substantially equal to the time of one race, the switches 154 and 167 are again actuated to their open condition to de-energize the timing motor 163 and main operating motor 107.

An enlarged, fragmentary view of the starting gate 38 is shown in Fig. 3, wherein a plurality of electrical circuits 169 each includes a series connected battery 170 and signal means 171, such as a light or the like, and terminates in a pair of contacts 172 disposed on the rear side of the starting gate 38 directly above each of the slots 31–36. The racing elements, such as the one shown fragmentarily at 173 in Fig. 3, are each provided on their front end with a conductive bar or strip 174 adapted to electrically connect the contacts 172 when the racing element reaches the starting gate. Hence, the signal lamp 171 will be illuminated when the racing element 173 completes the race and reaches the previously lowered starting gate 38.

As described in detail hereinbefore, the differential motion of the respective racing elements relative to their motion in the absence of the control means is determined by the contours of the cams carried on the lower ends of the cam shafts, and further, the winning racing element is determined by that particular control means having the cam with the greatest radius at 270°. Hence, in order to vary the results of successive races, it is necessary to change the information cams on the cam shafts.

In Figs. 13–17 and 20 are shown a device which greatly simplifies the placement and removal of cams with respect to the cam shafts, and insures a random order of cams on the cam shafts. A mounting plate 176 (see Fig. 13) is fixed horizontally below the mounting plate 58, and is provided with a pair of spaced, upstanding channels 177, 177 adapted to support standards 178, 178 for vertical shifting movement. The upper ends of the standards 178, 178 are fixedly connected together by a horizontal bar or bed 179. A horizontally disposed shaft 180 extends through and beyond the standards 178, 178 and has its opposite ends rotatably supported in journal bearings 181, 181. A pair of cams 182, 182 are disposed within the standards 178, 178 and fixed to the shaft 180 for rotation with the latter to effect up and down movement of the standards 178, 178 and the bed 179 between the upper and lower dot and dash line positions, and the solid line intermediate position. The bar or bed 179 extends directly below all of the control means cam shafts, and is provided in the region adjacent to each cam shaft with a pair of upstanding, inturned, facing flanges 185, 185. Thus, the flanges 185 on each side of the bar 179 are in aligned relation.

Substantially coplanar with the bed or bar 179, when the latter is in its intermediate position, and closely but spacedly surrounding the latter is a fixed horizontal plate 186 formed with a plurality of cutouts 187 on one side of and contiguous to the bar 179 each intermediate an adjacent pair of aligned inturned flanges 185. A plurality of elevator platforms or plates 189 are respectively mounted in the cutouts 187 for movement from a position flush with the plate 186 to a position just above the plane of the latter. One manner of mounting the elevator plates is illustrated in Fig. 20, where a swinging arm 190 has one end pivoted to the underside of the plate 186 and has its other end pivoted to the underside of an elevator plate, actuation of the arm 190 being effected by a vertically disposed solenoid 191 pivoted to an intermediate portion of the arm.

On the opposite side of the bar or bed 179 from the elevator plates 189, a horizontally disposed plate-like pusher 193 is mounted for sliding movement into and out of overlying relation with respect to the bed 179 when the latter is in its intermediate position. More particularly, the pusher 193 is formed with a plurality of generally rectangular ears or working portions 194, each disposed intermediate an adjacent aligned pair of inturned flanges 185 and movable with the pusher over the bed 179 to the opposite elevator platform 189. An upstanding pin 195 is fixed to the upper surface of the mounting plate 186 and projects into a pusher slot 196 to limit sliding movement of the pusher.

A carrier including a pair of horizontally arranged, vertically spaced supporting bars 198 and 199 are disposed below the bed 179, fixed relative to each other and relative to the bed. A plurality of vertically disposed positioning rods 200 are rotatably mounted in the supporting bars 198 and 199, each rod being in vertical alignment with one of the cam shafts. A coil compression spring 201 is circumposed about each of the rods 200 in bearing engagement with the upper surface of the upper supporting bar 198 and a collar 202 fixed to the rod, so that the rods have their upper ends resiliently biased through the bed 179 into the spaces between the facing pairs of inturned flanges 185, 185. Upward movement of the rods relative to the supporting bars 198 and 199 is limited by a transverse pin 203 extending through each of the rods and in bearing engagement with the underside of the lower supporting bar. A gear 204 is fixed to each of the rods 200 intermediate the supporting bars 198 and 199, and a rack 205 is adapted for meshing engagement with the gears 204 to rotate and spin the rods. The upper end portion of each rod 200, see Fig. 21, is provided with a rib or key. The gears 204 are in positive driving engagement with each other, by means not shown, so that the rod keys are held in predetermined angular relation.

The preferred spool-like construction of the cams is best seen in Figs. 14 and 15, wherein it is shown that a tubular shank 208, formed with a keyway, has a circular disc or collar 209 on one end, and a contoured cam collar 210 on the other end. The discs or collars 209 of all the cams are of the same size so as to slidably engage within the facing pairs of inturned flanges 185, while the contoured cam collars 210 are all slightly different and disposed above the flanges, as seen in Fig. 12.

With the pusher 193 in the position illustrated in Fig. 16, alongside of the bed 179 in its intermediate position, and with the elevator plates 189 in raised condition, it will be apparent that the bed combines with the inturned flanges 185, the pusher ears 194 and the elevator plates to define a channel or guideway adapted to slidably receive the collars 209 of the cams. That is, a plurality of the cams arranged in random order are slid into the above described channel or guideway. The elevator plates 189 are then lowered and the pusher moved laterally to displace those cams disposed in front of the pusher ears 194 off of the bed 197. Of course, the bed spacing between each facing pair of flanges 185, 185 is advantageously equal to a multiple of the diameter of the cam discs 209. The cams disposed between each

pair of facing flanges **185**, **185** will remain on the bed **179**, and the pusher may be returned to its position alongside of the bed.

With a cam disposed between each pair of facing flanges **185**, **185**, the bed **179** is lowered to its position of Fig. 13, and the rack **205** operated to rotate the rods **200**. The rods will be depressed downwards against the force of the springs **201** until they key with the keyways of the respective cams, whereupon the rods will engage in and effect rotation of the cams to orient the latter with their keyways in the same disposition as the keys of the cam shafts **130**. The bed **179** is then elevated by rotation of the shaft **180**, and the cams will be properly oriented to receive the keyed lower ends of the cam shafts.

After a race has been run, as described hereinbefore, the bed **179** is lowered to its intermediate position by rotating the shaft **180**, to withdraw the cams from the cam shafts, and a new series of cams in a random order may be slid into the channel or guide way in preparation for another contest.

From the foregoing, it is seen that the present invention provides a racing game which fully accomplishes its intended objects, and which is well adapted to meet practical conditions of manufacture and use.

Although the present invention has been described in some detail by way of illustration and example for purposes of clarity of understanding, it is understood that certain changes and modifications may be made within the spirit of the invention and scope of the appended claims.

Having thus described my invention, what I claim as new and desire to secure by Letters Patent, is:

1. In a racing game, a playing table shaped to define a race track, a plurality of flexible haul cords disposed in substantial parallelism along the course of said track, a plurality of cord moving mechanisms each mounting one of said haul cords for longitudinal movement along said track, each of said haul cords thus being adapted to carry a racing element along said track, a plurality of drive elements each operatively connected to one of said cord moving mechanisms to effect movement of the associated haul cord along said track at a predetermined speed, motive means operatively connected to said drive elements for actuating the latter, and independent control means associated with each of said drive elements to vary the speed of the respective drive element and hence of its haul cord, each of said drive elements comprising rotary input and output gears, and at least one rotary, revolvable planetary gear in transmitting connection between said input and output gears, said planetary gear being connected to the associated control means and revolved by the latter to vary the speed of said output gear relative to said input gear, each of said control means comprising a rotatable cam shaft, a cam removably keyed to said shaft, and a follower in engagement with said cam and connected to said planetary gear for revolving the latter in response to the contour of said cam.

2. A racing game according to claim 1, in combination with a bed disposed in adjacent facing relation with respect to the ends of said cam shafts and mounted for movement toward and away from the latter, said bed being being adapted to support a series of said cams in random order, and means for aligning one of said cams on said bed with each of said cam shafts, whereby movement of said bed toward and away from said cam shafts serves to mount and remove said cams from said cam shafts.

3. In a racing game, a playing table shaped to define an endless racing track, a plurality of flexible, endless haul cords disposed in substantial parallelism along the course of said track and supported for individual movement about said track, pulley means engaging each of said haul cords for effecting movement of the latter about said track, a plurality of differential gear trains each in driving connection respectively with one of said pulley means for rotating the latter and effecting movement of the associated haul cord along said track, motive means operatively connected to the input gears of said gear trains for driving the latter at substantially constant speeds, and independent control means operatively connected to each of said gear trains to vary the output speed of the latter and hence of its respective pulley means relative to its input speed, each of said differential gear trains comprising rotary input and output gears, and at least one rotary, revolvable planetary gear in power transmitting relation between said input and output gears, said planetary gear being connected to the associated control means and revolvable by the latter to vary the speed of said output gear relative to said input gear, each of said control means comprising a rotary cam shaft depending below said table and adapted to be driven by said motive means, a cam removably keyed on the lower end of each of said cam shafts, and a follower in engagement with each of said cams and connected to the respective planetary gear to revolve the latter in response to the contour of its associated cam.

4. A racing game according to claim 3, in combination with an upwardly facing bed disposed directly below the lower ends of said cam shafts and mounted for vertical movement toward and away from the latter, said bed being adapted to support a series of said cams in random order, and means for aligning one of said cams on said bed with each of said cam shafts, upward movement of said bed serving to mount said cams on said cam shafts for rotation therewith to actuate said followers, and downward bed movement serving to remove said cams from said cam shafts for replacement of said cams on said bed.

5. A racing game according to claim 4, said aligning means comprising a carrier fixedly disposed below said bed, a plurality of rods disposed below said bed in respective alignment with said cam shafts and mounted in said carrier for axial rotation and vertical shifting movement relative to said carrier, spring means urging said rods toward the upward position of their vertical shifting movement so that said rods extend yieldably through said bed upon downward movement of the latter, and means for rotating said rods to engage the latter in said cams and align said cams with said cam shafts, upward movement of said bed serving to key said cams on said cam shafts.

References Cited in the file of this patent

UNITED STATES PATENTS

2,077,464	Crowther et al.	Apr. 20, 1937
2,604,323	Smith et al.	July 22, 1952
2,641,472	Murphy	June 9, 1953