Office de la Propriété Intellectuelle du Canada
Un organisme d'Industrie Canada

Canadian Intellectual Property Office
An agency of Industry Canada

CA 2596584 A1 1999/01/28

(21) 2 596 584

(12) DEMANDE DE BREVET CANADIEN
CANADIAN PATENT APPLICATION

(13) A1

(22) Date de dépôt/Filing Date: 1998/07/15

(41) Mise à la disp. pub./Open to Public Insp.: 1999/01/28

(62) Demande originale/Original Application: 2 296 439

(30) Priorités/Priorities: 1997/07/15 (AUPO 8003); 1997/07/15 (AUPO 8017); 1997/07/15 (AUPO 8012); 1997/07/15 (AUPO 7993); 1997/07/15 (AUPO 7988); 1997/07/15 (AUPO 7998); 1997/07/15 (AUPO 7991); 1997/07/15 (AUPO 8031); 1997/07/15 (AUPO 8005); 1997/07/15 (AUPO 7980); 1997/07/15 (AUPO 8019); 1997/07/15 (AUPO 7989); 1997/07/15 (AUPO 7982); 1997/07/15 (AUPO 7978); 1997/07/15 (AUPO 8015); 1997/07/15 (AUPO 7979); 1997/07/15 (AUPO 7997); 1997/07/15 (AUPO 7938); 1997/07/15 (AUPO 8030); 1997/07/15 (AUPO 8016); ...

(51) Cl.Int./Int.Cl. *H04N 5/30* (2006.01), *G06T 5/00* (2006.01), *H04N 5/335* (2006.01)

(71) Demandeur/Applicant:
SILVERBROOK RESEARCH PTY. LIMITED, AU

(72) Inventeurs/Inventors:
SILVERBROOK, KIA, AU;
LAPSTUN, PAUL, AU

(74) Agent: BERESKIN & PARR

(54) Titre : SYSTEME PHOTOGRAPHIQUE AVEC INTERPRETEUR DE LANGAGE MACHINE
(54) Title: CAMERA SYSTEM WITH COMPUTER LANGUAGE INTERPRETER

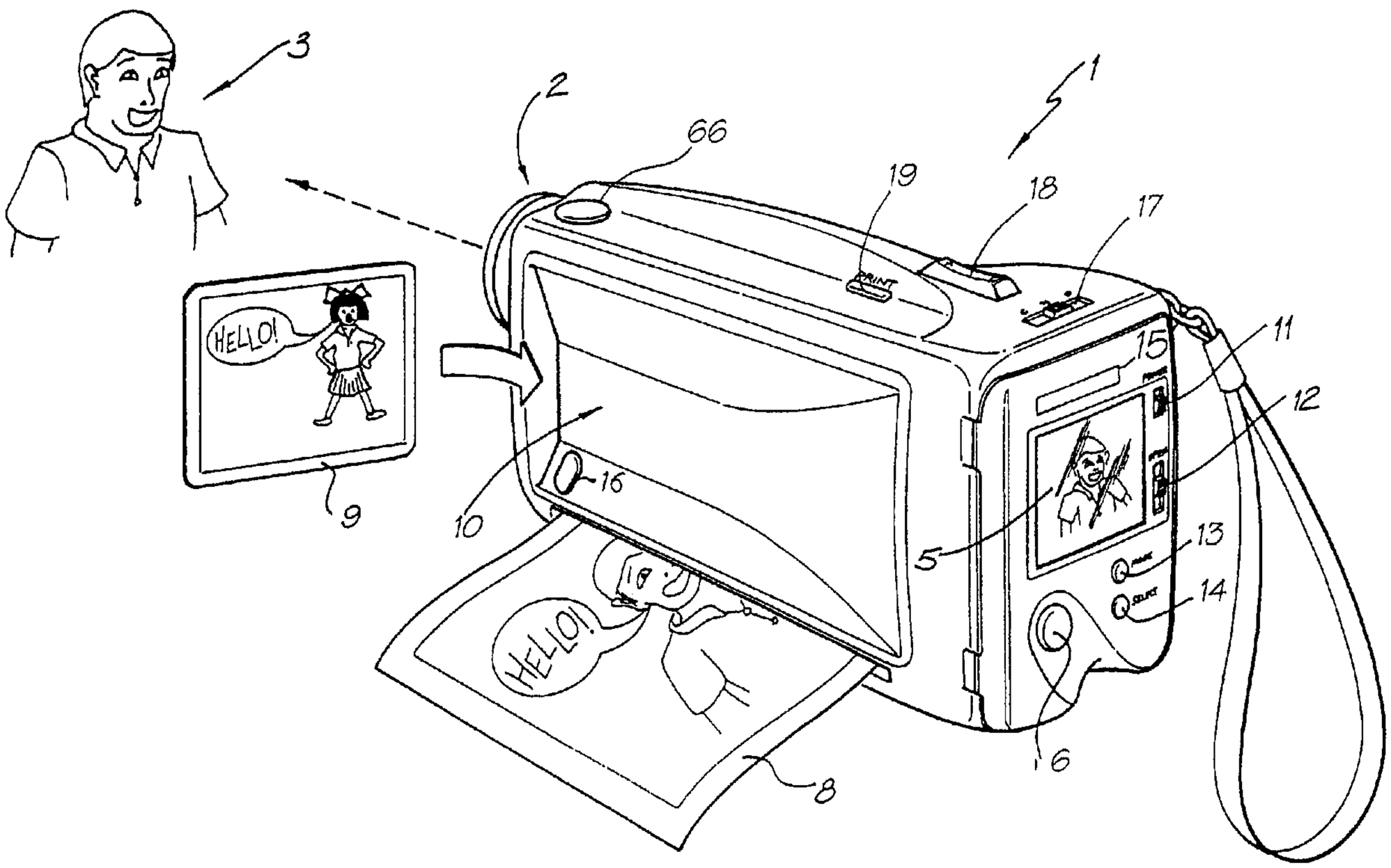

(57) Abrégé/Abstract:
This patent describes a portable camera with integral printer device. The camera includes a digital image capture device for the capturing of digital images; an integral programming language interpreter means connected to said digital image capture means for the manipulation of said digital image; a script input means for inputting a program script for the manipulation of said digital image; herein said script is executed by said interpreter means so as to modify said image in accordance with said script so to provide a printout of a modified image on said integral printer.

(21) 2 596 584

(13) A1

(30) Priorités(suite)/Priorities(continued): 1997/07/15 (AUPO 8024); 1997/07/15 (AUPO 7999); 1997/07/15 (AUPO 8032); 1997/07/15 (AUPO 8025); 1997/07/15 (AUPO 8014); 1997/07/15 (AUPO 7990); 1997/07/15 (AUPO 7934); 1997/07/15 (AUPO 7977); 1997/07/15 (AUPO 7981); 1997/07/15 (AUPO 7986); 1997/07/15 (AUPO 7983); 1997/07/15 (AUPO 8026); 1997/07/15 (AUPO 8027); 1997/07/15 (AUPO 8028); 1997/07/15 (AUPO 8023); 1997/07/15 (AUPO 8029); 1997/07/15 (AUPO 8022); 1997/07/15 (AUPO 7987); 1997/07/15 (AUPO 7985); 1997/07/15 (AUPO 8020); 1997/07/15 (AUPO 7939); 1997/07/15 (AUPO 7940); 1997/07/15 (AUPO 8000); 1997/07/15 (AUPO 8021); 1997/07/15 (AUPO 8018); 1997/07/15 (AUPO 7942); 1997/08/11 (AUPO 8497); 1997/08/11 (AUPO 8498); 1997/08/11 (AUPO 8505); 1997/08/11 (AUPO 8499); 1997/08/11 (AUPO 8502); 1997/08/11 (AUPO 8500); 1997/08/11 (AUPO 8501); 1997/08/11 (AUPO 8504); 1997/09/23 (AUPO 9395); 1997/09/23 (AUPO 9394); 1997/09/23 (AUPO 9404); 1997/09/23 (AUPO 9405); 1997/09/23 (AUPO 9403); 1997/09/23 (AUPO 9402); 1997/09/23 (AUPO 9401); 1997/09/23 (AUPO 9400); 1997/09/23 (AUPO 9399); 1997/09/23 (AUPO 9398); 1997/09/23 (AUPO 9397); 1997/09/23 (AUPO 9396); 1997/12/16 (AUPP 0959); 1998/01/19 (AUPP 1397); 1998/03/16 (AUPP 2370); 1998/03/16 (AUPP 2371); 1998/06/12 (AUPP 4094)

ABSTRACT

This patent describes a portable camera with integral printer device. The camera includes a digital image capture device for the capturing of digital images; an integral programming language interpreter means connected to said digital image capture means for the manipulation of said digital image; a script input means for inputting a program script for the manipulation of said digital image; herein said script is executed by said interpreter means so as to modify said image in accordance with said script so to provide a printout of a modified image on said integral printer.

DEMANDES OU BREVETS VOLUMINEUX

LA PRÉSENTE PARTIE DE CETTE DEMANDE OU CE BREVETS COMPREND PLUS D'UN TOME.

CECI EST LE TOME __1___ DE __2___

NOTE: Pour les tomes additionels, veillez contacter le Bureau Canadien des Brevets.

JUMBO APPLICATIONS / PATENTS

THIS SECTION OF THE APPLICATION / PATENT CONTAINS MORE THAN ONE VOLUME.

THIS IS VOLUME __1___ OF __2___

NOTE: For additional volumes please contact the Canadian Patent Office.

CAMERA SYSTEM WITH COMPUTER LANGUAGE INTERPRETER

Field of the Invention

The present invention relates to an image processing method and apparatus and, in particular, discloses a Digital Instant Camera with Image Processing Capability.

The present invention further relates to the field of digital camera technology and, particularly, discloses a digital camera having an integral color printer.

Background of the Invention

Traditional camera technology has for many years relied upon the provision of an optical processing system which relies on a negative of an image which is projected onto a photosensitive film which is subsequently chemically processed so as to "fix" the film and to allow for positive prints to be produced which reproduce the original image. Such an image processing technology, although it has become a standard, can be unduly complex, as expensive and difficult technologies are involved in full color processing of images. Recently, digital cameras have become available. These cameras normally rely upon the utilization of a charged coupled device (CCD) to sense a particular image. The camera normally includes storage media for the storage of the sensed scenes in addition to a connector for the transfer of images to a computer device for subsequent manipulation and printing out.

Such devices are generally inconvenient in that all images must be stored by the camera and printed out at some later stage. Hence, the camera must have sufficient storage capabilities for the storing of multiple images and, additionally, the user of the camera must have access to a subsequent computer system for the downloading of the images and printing out by a computer printer or the like.

Further, Polaroid™ type instant cameras have been available for some time which allow for the production of instant images. However, this type of camera has limited utility producing only limited sized images and many problems exist with the chemicals utilised and, in particular, in the aging of photographs produced from these types of cameras.

When using such devices and other image capture devices it will be desirable to be able to suitably deal with audio and other environmental information when taking a picture.

Further, the creation of stereoscopic views, with a first image being presented to the left eye and second image being presented to the right eye, thereby creating an illusion of a three dimensional surface is well known. However, previous systems have required complex preparation and high fidelity images have generally not been possible. Further, the general choice of images has been limited with the images normally only being specially prepared images.

There is a general need for being able to produce high fidelity stereoscopic images on demand and in particular for producing images by means of a portable camera device wherein the stereoscopic image can be taken at will.

Further, it would be highly convenient if such a camera picture image production system was able to create automatic customised postcards which, on a first surface contained the image captured by the camera device and, on a second surface, contains pre-paid postage marks and address details.

Recently, it has become more and more popular in respect of photographic reproduction techniques to produce longer and longer "panoramic" views of a image. These images can be produced on photographic paper or

the like and the structure of the image is normally to have longer and longer lengths in comparison to the width so as to produce the more "panoramic" type views. Unfortunately, this imposes a problem where the photographic paper to be imaged upon originally was stored on a roll of small diameter.

Recently, it has become quite popular to provide filters which produce effects on images similar to popular artistic painting styles. These filters are designed to take an image and produce a resultant secondary image which appears to be an artistic rendition of the primary image in one of the artistic styles. One extremely popular artist in modern times was Vincent van Gogh. It is a characteristic of art works produced by this artist that the direction of brush strokes in flat areas of his paintings strongly follow the direction of edges of dominant features in the painting. For example, his works entitled "Road with Cypress and Star", "Starry Night" and "Portrait of Doctor Gachet" are illustrative examples of this process. It would be desirable to provide a computer algorithm which can automatically produce a "van Gogh" effect on an arbitrary input image an output it on a portable camera system..

Unfortunately, warping systems generally utilised high end computers and are generally inconvenient in that an image must be scanned into the computer processed and then printed out. This is generally inconvenient, especially where images are captured utilising a hand held camera or the like as there is a need to, at a later stage, transfer the captured images to a computer system for manipulation and to subsequently manipulate them in accordance with requirements.

Further, new and unusual effects which simulate various painting styles are often considered to be of great value. Further, if these effects can be combined into one simple form of implementation they would be suitable for incorporation into a portable camera device including digital imaging capabilities and thereby able to produce desire filtered images of scenes taken by a camera device.

Unfortunately, changing digital imaging technologies and changing filter technologies result in onerous system requirements in that cameras produced today obviously are unable to take advantages of technologies not yet available nor are they able to take advantage of filters which have not, as yet, been created or conceived.

One extremely popular form of camera technology is the traditional negative film and positive print photographs. In this case, a camera is utilized to image a scene onto a negative which is then processed so as to fix the negative. Subsequently, a set of prints is made from the negative. Further sets of prints can be instantly created at any time from the set of negatives. The prints normally having a resolution close to that of the original set of prints. Unfortunately, with digital camera devices, including those proposed by the present applicant, it would be necessary to permanently store in a digital form the photograph captured and printed out if further copies of the image were desired at a later time. This would be generally inconvenient in that, ideally, a copy of a "photograph" should merely require the initial print. Of course, alternatively, the original print may be copied utilising a high quality colour photocopying device. Unfortunately, any such device has limited copy capabilities and signal degradation will often be the result when such a form of copying is used. Obviously, more suitable forms of producing copies of camera prints are desirable.

Further, Almost any artistic painting of a scene utilises a restricted gamut in that the artist is limited in the colours produced as a result of the choice of medium in rendering the image. This restriction is itself often exploited by the artist to produce various artistic effects. Classic examples of this process include the following well known artistic works:

- Camille Pissaro "L'le Lacroix - Rouen, effect de brouillard" 1888. Museum of Art, Philadelphie
- Charles Angrand "Le Seine - L'aube" - 1889
  collection du Petit Palais, Geneve
- Henri van de Velde "Crepuscule" - 1892. Rijksmuseum Kröller Müller, Otterlo
- Georges Seurat. "La cote du Bas-Butin, Honfleur" 1886 - Muse des Beaux - Arts, Tournai

It would be desirable to produce, from an arbitrary input image, an output image having similar effects or characteristics to those in the above list.

A number of creative judgements are made when any garment is created. Firstly, there is the shape and styling of the garment and additionally, there is the fabric colours and style. Often, a fashion designer will try many different alternatives and may even attempt to draw the final fashion product before creating the finished garment.

Such a process is generally unsatisfactory in providing a rapid and flexible turn around of the garments and also providing rapid opportunities judgement of the final appearance of a fashion product on a person.

A number of creative judgements are made when any garment is created. Firstly, there is the shape and styling of the garment and additionally, there is the fabric colours and style. Often, a fashion designer will try many different alternatives and may even attempt to draw the final fashion product before creating the finished garment.

Such a process is generally unsatisfactory in providing a rapid and flexible turn around of the garments and also providing rapid judgement of the final appearance of a fashion product on a person.

Binocular and telescope devices are well known. In particular, taking the example of a binocular device, the device provides for telescopic magnification of a scene so as to enhance the user's visual capabilities. Further, devices such as night glasses etc. also operate to enhance the user's visual system. Unfortunately, these systems tend to rely upon real time analog optical components and a permanent record of the viewed scene is difficult to achieve. One methodology perhaps suitable for recording a permanent copy of a scene is to attach a sensor device such as a CCD or the like so as to catch the scene and store it on a storage device for later printing out. Unfortunately, such an arrangement can be unduly cumbersome especially where it is desired to utilize the binocular system in the field in a highly portable manner.

Many forms of condensed information storage are well known. For example, in the field of computer devices, it is common to utilize magnetic disc drives which can be of a fixed or portable nature. In respect of portable discs, "Floppy Discs", "Zip Discs", and other forms of portable magnetic storage media have to achieve to date a large degree of acceptance in the market place. Another form of portable storage is the compact disc "CD" which utilizes a series of elongated pits along a spiral track which is read by a laser beam device. The utilization of CD's provides for an extremely low cost form of storage. However, the technologies involved are quite complex and the use of rewritable CD type devices is extremely limited.

Other forms of storage include magnetic cards, often utilized for credit cards or the like. These cards normally have a magnetic strip on the back for recording information which is of relevance to the card user. Recently, the convenience of magnetic cards has been extended in the form of SmartCard technology which includes

incorporation of integrated circuit type devices on to the card. Unfortunately, the cost of such devices is often high and the complexity of the technology utilized can also be significant.

Traditionally silver halide camera processing systems have given rise to the well known utilisation of a "negative" for the production of multiple prints. The negative normally forms the source of the production prints and the practice has grown up for the independent care and protection of negatives for their subsequent continual utilisation.

With any form of encoding system which is to be sensed in a fault tolerant manner, there is the significant question of how best to encode the data so that it can be effectively and efficiently decoded. It is therefore desirable to provide for an effective encoding system.

Summary of the Invention

A portable camera with integral printer device, said camera including:

(a) a digital image capture device for the capturing of digital images;

(b) an integral programming language interpreter means connected to said digital image capture means for the manipulation of said digital image;

(c) a script input means for inputting a program script for the manipulation of said digital image;

herein said script is executed by said interpreter means so as to modify said image in accordance with said script so to provide a printout of a modified image on said integral printer.

Further aspects disclosed herein include:

An alternative form of camera system which includes a digital camera with an integral color printer. Additionally, the camera provides hardware and software for the increasing of the apparent resolution of the image sensing system and the conversion of the image to a wide range of "artistic styles" and a graphic enhancement.

In accordance with a further aspect of the present invention, there is provided a camera system comprising at least one area image sensor for imaging a scene, a camera processor means for processing said imaged scene in accordance with a predetermined scene transformation requirement, a printer for printing out said processed image scene on print media, print media and printing ink stored in a single detachable module inside said camera system, said camera system comprising a portable hand held unit for the imaging of scenes by said area image sensor and printing said scenes directly out of said camera system via said printer.

Preferably the camera system includes a print roll for the storage of print media and printing ink for utilization by the printer, the print roll being detachable from the camera system. Further, the print roll can include an authentication chip containing authentication information and the camera processing means is adapted to interrogate the authentication chip so as to determine the authenticity of said print roll when inserted within said camera system.

Further, the printer can include a drop on demand ink printer and guillotine means for the separation of printed photographs.

In accordance with a first aspect of the present invention, there is provided a camera system comprising at least one area image sensor for imaging a scene, a camera processor means for processing said image scene in accordance with a predetermined scene transformation requirement, a printer for printing out said processed image scene on print media said printer, print media and printing ink stored in a single detachable module inside said camera system, said camera system comprising a portable hand held unit for the imaging of scenes by said area image sensor and printing said scenes directly out of said camera system via said printer.

Preferably the camera system includes a print roll for the storage of print media and printing ink for utilisation by the printer, s the aid print roll being detachable from the camera system. Further, the print roll can include an authentication chip containing authentication information and the camera processing means is adapted to interrogate the authentication chip so as to determine the authenticity of said print roll when inserted within said camera system.

Further, the printer can include a drop on demand ink printer and guillotine means for the separation of

printed photographs.

In accordance with a further aspect of the invention there is provided a user interface for operating a device, said user interface comprising a card which is inserted in a machine and on the face of the card is contained a visual representation of the effect the card will have on the output of the machine.

In accordance with a further aspect of the invention there is provided the camera system comprising:

at least one area image sensor for imaging a scene;

a camera processor means for processing said imaged scene in accordance with a predetermined scene transformation requirement;

a printer for printing out said processed image scene on print media said printer;

a detachable module for storing said print media and printing ink for said printer;

said camera system comprising a portable hand held unit for the imaging of scenes by said area image sensor and printing said scenes directly out of said camera system via said printer.

In accordance with a further aspect of the present invention, there is provided a camera system comprising a sensor means for sensing an image; a processing means for processing the sensed image in accordance with a predetermined processing requirement, if any; audio recording means for according an audio signal to be associated with the sensed image; printer means for printing the processed sensed image on a first area of a print media supplied with the camera system, in addition to printing an encoded version of the audio signal on a second area of the print media. Preferably the sensed image is printed on a first surface of the print media and the encoded version of the audio signal is printed on a second surface of the print media.

In accordance with the present invention there is provided a camera system having:

an area image sensor means for sensing an image;

an image storage means for storing the sense image;

an orientation means for sensing the camera's orientation when sensing the image; and

a processing means for processing said sensed image utilising said sensed camera orientation.

In accordance with the present invention there is provided a camera system having:

an area image sensor means for sensing an image;

an image storage means for storing the sense image;

an orientation means for sensing the camera's orientation when sensing the image; and

a processing means for processing said sensed image utilising said sensed camera orientation.

In accordance with a further aspect of the present invention there is provided a method of processing a digital image comprising:

capturing the image utilising an adjustable focusing technique;

utilising the focusing settings as an indicator of the position of structures within the image;

processing the image, utilising the said focus settings to produce effects specific to said focus settings; and

printing out the image.

Preferably the image can be captured utilising a zooming technique; and the zooming settings can be used in a heuristic manner so as to process portions of said image.

In accordance with a further aspect of the invention there is provided a method of processing an image taken with a digital camera including an eye position sensing means said method comprising the step of utilizing the eye position information within the sensed image to process the image in a spatially varying sense, depending upon said location information.

The utilizing step can comprise utilizing the eye position information to locate an area of interest within said sensed image. The processing can includes the placement of speech bubbles within said image or applying a region specific warp to said image. Alternatively the processing can include applying a brush stroke filter to the image having greater detail in the area of said eye position information. Ideally the camera is able to substantially immediately print out the results of the processing.

In accordance with a further aspect of the invention there is provided a method of processing an image taken with a digital camera including an auto exposure setting, said method comprising the step of utilising said information to process a sensed image.

The utilising step can comprise utilising the auto exposure setting to determine an advantageous re-mapping of colours within the image so as to produce an amended image having colours within an image transformed to account of the auto exposure setting. The processing can comprise re-mapping image colours so they appear deeper and richer when the exposure setting indicates low light conditions and re-mapping image colours to be brighter and more saturated when the auto exposure setting indicates bright light conditions.

The utilising step includes adding exposure specific graphics or manipulations to the image.

Recently, digital cameras have become increasingly popular. These cameras normally operate by means of imaging a desired image utilising a charge coupled device (CCD) array and storing the imaged scene on an electronic storage medium for later down loading onto a computer system for subsequent manipulation and printing out. Normally, when utilising a computer system to print out an image, sophisticated software may available to manipulate the image in accordance with requirements.

Unfortunately such systems require significant post processing of a captured image and normally present the image in an orientation to which is was taken, relying on the post processing process to perform any necessary or required modifications of the captured image. Further, much of the environmental information available when the picture was taken is lost.

Recently, digital cameras have become increasingly popular. These cameras normally operate by means of imaging a desired image utilising a charge coupled device (CCD) array and storing the imaged scene on an electronic storage medium for later down loading onto a computer system for subsequent manipulation and printing out. Normally, when utilising a computer system to print out an image, sophisticated software may available to manipulate the image in accordance with requirements.

Unfortunately such systems require significant post processing of a captured image and normally present the image in an orientation to which is was taken, relying on the post processing process to perform any necessary or required modifications of the captured image. Further, much of the environmental information available when the picture was taken is lost.

In accordance with a further aspect of the present invention there is provided a method of processing an image captured utilising a digital camera and a flash said method comprising the steps of :

a) locating distortions of said captured image due to the utilisation of said flash;

b) retouching said image so as to locally reduce the effect of said distortions.

In accordance with the second aspect of the present invention there is provided a digital camera having reduced flash distortion effects on captured images comprising;

(a) a digital means capturing image for the capture of images;

(b) a distortion location means for locating flash induced colour distortions in the captured image; and

(c) image inversed distortion means connected to said distortion location means and said digital image capture means and adapted to process said captured image to reduce the effects of said distortions;

(d) display means connected to said distortion for displaying.

In accordance with a further aspect of the present invention there is provided a method of creating a stereoscopic photographic image comprising:

(a) utilising a camera device to image a scene stereographically;

(b) printing said stereographic image as an integrally formed image at predetermined positions on a first surface portion of a transparent printing media, said transparent printing media having a second surface including a lensing system so as to stereographically image said scene to the left and right eye of a viewer of said printed stereographic image.

In accordance with a further aspect of the present invention there is provided a print media and ink supply means adapted to supply a printing mechanism with ink and printing media upon which the ink is to be deposited, said media and ink supply means including a roll of media rolled upon a media former within said media and ink supply means and at least one ink reservoir integrally formed within said media and ink supply means and adapted to be connected to said printing mechanism for the supply of ink and printing media to said printing mechanism.

In accordance with a further aspect of the present invention there is provided a print media and ink supply means adapted to supply a printing mechanism with ink and printing media upon which the ink is to be deposited, said media and ink supply means including a roll of media rolled upon a media former within said media and ink supply means and at least one ink reservoir integrally formed within said media and ink supply means and adapted to be connected to said printing mechanism for the supply of ink and printing media to said printing mechanism.

In accordance with a further aspect of the present invention there is provided a print roll for use in a camera imaging system said print roll having a backing surface having a plurality of formatted postcard information printed at pre-determined intervals.

In accordance with the second aspect of the present invention there is provided a method of creating customised postcards comprising the steps of: utilising a camera device having a print roll having a backing surface including a plurality of formatted postcard information sections at pre-determined positions on said backing surface;

imaging a customised image on a corresponding imaging surface of said print roll; and

utilising said print roll to produce postcards via said camera device.

In accordance with the third aspect of the present invention there is provided a method of sending postcards comprising camera images through the postal system said method comprising steps of:

selling a print roll having prepaid postage contained within the print roll;

utilising the print roll in a camera imaging system to produce postcards having prepaid postage; and sending said prepaid postcards through the mail.

The present invention is further directed to a camera system with an integral printer type device. The print media being detachable from the camera system and including a means for the storage of significant information in respect of the print media.

The present invention is further directed to a camera system with an integral printer type device. The print media being detachable from the camera system and including means for providing an authentication access to the print media.

In accordance with a further aspect of the present invention there is provided a plane print media having a reduced degree of curling in use, said print media having anisotropic stiffness in the direction of said planes.

In accordance with the second aspect of the present invention there is provided a method of reducing the curl in an image printed on plane print media having an anisotropic stiffness said method comprising applying a localised pressure to a portion of said print media.

The present invention is further directed to a camera system with an integral printer type device. The camera system including an indicator for the number of images left in the printer, with the indicator able to display the number of prints left in a number of different modes.

In accordance with a further aspect of the present invention there is provided a method of automatically processing an image comprising locating within the image features having a high spatial variance and stroking the image with a series of brush strokes emanating from those areas having high spatial variance. Preferably, the brush strokes have decreasing sizes near important features of the image. Additionally, the position of a predetermined portion of brush strokes can undergo random jittering.

In accordance with a further aspect of the invention there is provided a method of warping of producing a warped image from an input image, said method comprising the steps of:

inputting a warp map for an arbitrary output image having predetermined dimensions A x B, each element of said warp map mapping a corresponding region in a theoretical input image to a pixel location of said arbitrary output image corresponding to the co-ordinate location of said element within said warp map;

scaling said warp map to the dimensions of said warped image so as to produce a scaled warp map;

for substantially each element in said scaled warp map, calculating a contribution region in said input image through utilization of said element value and adjacent element values; and

determining an output image colour for a pixel of said warped image corresponding to said element from said contribution region.

In accordance with a further aspect of the present invention, there is provided a method of increasing the resilience of data stored on a medium for reading by a sensor device pricing the steps of:

(a) modulating the stored data in a recoverable fashion with the modulating signal having a high frequency component.

(b) storing the data on said medium in a modulated form;

(c) sensing the modulated stored data by said sensor device;

(d) neutralising the modulation of the modulated stored data to track the spread of location of

said modulated stored data on said medium; and

(e) recovering the unmodulated stored data from the modulated stored data.

The preferred embodiment of the present invention will be described with reference to a card reading system for reading data via a CCD type device into a camera system for subsequent decoding. Further, the discussion of the preferred embodiment relies heavily upon the field of error control systems. Hence, the person to which this specification is directed should be an expert in error of control systems and in particular, be firmly familiar with such standard texts such as "Error control systems for Digital Communication and Storage" by Stephen B Wicker published 1995 by Prentice - Hall Inc. and in particular, the discussion of Reed - Solomon codes contained therein and in other standard text.

It is an object of the present invention to provide for a method of converting a scanned image comprising scanned pixels to a corresponding bitmap image, said method comprising the steps of, for each bit in the bitmap image;

a. determining an expected location in said scanned image of a current bit from the location of surrounding bits in said scanned image;

b. determining a likely value of said bit from the values at the locations of expected corresponding pixels in said scanned image;

c. determining a centroid measures of the centre of the centre of the expected intensity at the said expected location;

d. determining similar centroid measures for adjacent pixels surrounding said current bit in said scanned image and;

e. where said centroid measure is improved relative to said expected location, adjusting said expected location to be an adjacent pixel having an improved centroid measure.

In accordance with a further aspect of the present invention there is provided an apparatus for text editing an image comprising a digital camera device able to sense an image; a manipulation data entry card adapted to be inserted into said digital camera device and to provide manipulation instructions to said digital camera device for manipulating said image, said manipulation instructions including the addition of text to said image; a text entry device connected to said digital camera device for the entry of said text for addition to said image wherein said text entry device includes a series of non-roman font characters utilised by said digital camera device in conjunction with said manipulation instructions so as to create new text characters for addition to said image.

Preferably, the font characters are transmitted to said digital camera device when required and rendered by said apparatus in accordance with said manipulation instructions so as to create said new text characters. The manipulation data entry card can include a rendered roman font character set and the non-roman characters include at least one of Hebrew, Cyrillic, Arabic, Kanji or Chinese characters.

In accordance with a further aspect of the present invention there is provided an apparatus for text editing an image comprising a digital camera device able to sense an image; a manipulation data entry card adapted to be inserted into said digital camera device and to provide manipulation instructions to said digital camera device for manipulating said image, said manipulation instructions including the addition of text to said image; a text entry device connected to said digital camera device for the entry of said text for addition to said image wherein said

text entry device includes a series of non-roman font characters utilised by said digital camera device in conjunction with said manipulation instructions so as to create new text characters for addition to said image.

Preferably, the font characters are transmitted to said digital camera device when required and rendered by said apparatus in accordance with said manipulation instructions so as to create said new text characters. The manipulation data entry card can include a rendered roman font character set and the non-roman characters include at least one of Hebrew, Cyrillic, Arabic, Kanji or Chinese characters.

It is an object of the present invention to provide a system which readily is able to take advantage of updated technologies in a addition to taking advantage of new filters being created and, in addition, providing a readily adaptable form of image processing of digitally captured images for printing out.

In accordance with a further aspect of the present invention, there is provided an image copying device for reproduction of an input image which comprises a series of ink dots, said device comprising:

(a) imaging array means for imaging said input image at a sampling rate higher than the frequency of said dots so as to produce a corresponding sampled image;

(b) processing means for processing said image so as to determine the location of said print dots in said sample image;

(c) print means for printing ink dots on print media at locations corresponding to the locations of said print dots.

2. An image copying device as claimed in claim 1 wherein said copying device prints a full color copies of said input image.

In accordance with a further aspect of the present invention there is provided a camera system for outputting deblurred images, said system comprising;

an image sensor for sensing an image; a velocity detection means for determining any motion of said image relative to an external environment and to produce a velocity output indicative thereof; a processor means interconnected to said image sensor and said velocity detection means and adapted to process said sensed image utilising the velocity output so as to deblurr said image and to output said deblurred image.

Preferably, the camera system is connected to a printer means for immediate output of said deblurred image and is a portable handheld unit. The velocity detection means can comprise an accelerometer such as a micro-electro mechanical (MEMS) device.

In accordance with a further aspect of the present invention, there is provided a photosensor reader preform comprising:

(a) a series of light emitter recesses for the insertion of light emitted devices;

(b) light emitter focusing means for focusing light emitted from the series of light emitter devices onto the surface of an object to be imaged as it traverses the surface of said preform;

(c) a photosensor recess for the insertion of a linear photosensor array; and

(d) focussing means for focussing light reflected from said object to be imaged onto a distinct portion of said CCD array.

In accordance with an aspect of the present invention, there is provided a printer device for interconnection with a computer system comprising a printer head unit including an ink jet print head for printing

images on print media and further having a cavity therein for insertion of a consumable print roll unit and a print roll unit containing a consumable print media and ink for insertion into said cavity, said ink being utilised by said ink jet print head for printing images on said print media.

In accordance with a further aspect of the present invention, there is provided a digital camera system comprising a sensing means for sensing an image; modification means for modifying the sensed image in accordance with modification instructions input into the camera; and an output means for outputting the modified image; wherein the modification means includes a series of processing elements arranged around a central crossbar switch. Preferably, the processing elements include an Arithmetic Logic Unit (ALU) acting under the control of a microcode store wherein the microcode store comprises a writeable control store. The processing elements can include an internal input and output FIFO for storing pixel data utilized by the processing elements and the modification means is interconnected to a read and write FIFO for reading and writing pixel data of images to the modification means.

Each of the processing elements can be arranged in a ring and each element is also separately connected to its nearest neighbours. The ALU accepts a series of inputs interconnected via an internal crossbar switch to a series of core processing units within the ALU and includes a number of internal registers for the storage of temporary data. The core processing units can include at least one one of a multiplier, an adder and a barrel shifter.

The processing elements are further connected to a common data bus for the transfer of pixel data to the processing elements and the data bus is interconnected to a data cache which acts as an intermediate cache between the processing elements and a memory store for storing the images.

In accordance with a further aspect of the present invention there is provided a method of rapidly decoding, in real time, sensed image data stored at a high pitch rate on a card, said method comprising the steps of;

detecting the initial position of said image data;

decoding the image data so as to determine a corresponding bit pattern of said image data.

In accordance with a further aspect of the present invention there is provided a method of rapidly decoding sensed image data in a fault tolerant manner, said data stored at a high pitch rate on a card and subject to rotations, warping and marking, said mehtod comprising the steps of:

determining an initial location of a start of said image data;

sensing said image data at a sampling rate greater than said pitch rate;

processing said sensed image data in a column by column process, keeping an expected location of the center of each dot (centroid) of a next column and utilising fine adjustments of said centroid when processing each column so as to update the location of an expected next centroid.

In accordance with a further aspect of the present invention there is provided a method of accurately detecting the value of a dot of sensed image data, said image data comprising an array of dots and said sensed image data comprising a sampling of said image data at a rate greater than the pitch frequency of said array of dots so as to produce an array of pixels, said method comprising the steps of:

determining an expected middle pixel of said array of pixels, said middle pixel corresponding to an expected

central location of a corresponding dot;

utilising the sensed value of said middle pixel and the sensed value of a number of adjacent pixels as an index to a lookup table having an output corresponding to the value of a dot centred around the corresponding location of said pixel.

In accordance with a further aspect of the present invention there is provided a method of accurately determining the location of dots of sensed image data amongst an array of dots of image data in a fault tolerant manner, said data stored at a high pitch rate on a card and subject to rotations, warping and marking effects, said method comprising the steps of:

processing the image data in a column by column format;

recording the dot pattern of previously processed columns of pixels;

generating an expected dot pattern at a current column position from the recorded dot pattern of previously processed pixels;

comparing the expected dot pattern with an actual dot pattern of sensed image data at said current column position;

if said comparison produces a match within a predetermined error, utilising said current column position as an actual dot position otherwise altering said current column position to produce a better fit to said expected dot pattern to thereby produce new actual dot position, and

utilising said actual dot position of the dot at a current column position in the determining of dot location of dots of subsequent columns.

In accordance with a further aspect of the present invention there is provided a method of combining image bump maps to simulate the effect of painting on an image, the method comprising:

defining an image canvas bump map approximating the surface to be painted on;

defining a painting bump map of a painting object to be painted on said surface;

combining said image canvas bump map and said painting bump map to produce a final composited bump map utilising a stiffness factor, said stiffness factor determining the degree of modulation of said painting bump map by said image canvas bump map.

In accordance with a further aspect of the present invention there is provided a method of automatically manipulating an input image to produce an artistic effect comprising:

predetermining a mapping of an input gamut to a desired output gamut so as to produce a desired artistic effect;

utilising said mapping to map said input image to an output image having a predetermined output gamut;

Preferably, the method further comprises the step of post processing the output image utilising a brush stroke filter.

Further, preferably the output gamut is formed from mapping a predetermined number of input gamut values to corresponding output colour gamut values and interpolating the remaining mapping of input gamut values to output colour gamut values. The interpolation process can include utilising a weighted sum of said mapping of a predetermined number of input gamut values to corresponding output colour gamut values.

In accordance with the second aspect of the present invention there is provided a method of compressing an input colour gamut to be within an output colour gamut, said method comprising the steps of:

determining a zero chrominance value point at a current input colour intensity;

determining a source distance being the distance from said zero chrominance value to the edge of said input colour gamut;

determining a suitable edge of said output colour gamut;

determining a target distance being the distance from said zero chrominance value to the edge of said output colour gamut; and

scaling the current input colour intensity by a factor derived from the ratio of source distance to target distance;

Preferably said current input colour intensity is further scaled by a factor dependent on the distance for said current input colour from said zero chrominance value point.

In accordance with a further aspect of the present invention, there is provided a handheld camera for the output of an image sensed by the camera, with the camera including:

sensing means for sensing an image;

tiling means for adding tiling effects to the sensed image to produce a tiled image; and

display means for displaying the tiled image.

In accordance with a further aspect of the present invention, there is provided a handheld camera for the output of an image sensed by the camera, with the camera including:

sensing means for sensing an image;

texture mapping means for adding texturing effects to the sensed image to produce a textured image; and

display means for displaying the textured image.

In accordance with a further aspect of the present invention, there is provided a handheld camera for the output of an image sensed by the camera, with the camera including:

sensing means for sensing an image;

lighting means for adding lighting to the sensed image to produce an illuminated image which simulates the effect of light sources projected at the sensed image; and

display means for displaying the illuminated image.

In accordance with a further aspect of the present invention there is provided a garment creation system comprising:

a series of input tokens for inputting to a camera device for manipulation of a sensed image for outputting on a display device depicting a garment constructed of fabric having characteristics of said sensed image;

a camera device adapted to read said input tokens and sense an image and manipulate said image in accordance with a read input token so as to produce said output image; and a display device adapted to display said output image

In accordance with a further aspect of the present invention there is provided A garment creation system comprising:

an expected image creation system including an image sensor device and an image display device, said image creation system mapping portions of an arbitrary image sensed by said image sensor device onto a garment and outputting on said display device a depiction of said garment;

a garment fabric printer adapted to be interconnected to said image creation system for printing out corresponding pieces of said garment including said mapped portions..

In accordance with a further aspect of the present invention as provided a method of creating a manipulated image comprising interconnecting a series of camera manipulation units, each of said camera manipulation unit applying an image manipulation to an inputted image so as to produce a manipulated output image, an initial one of said camera manipulation units sensing an image from an environment and at least a final one of said camera manipulation units producing a permanent output image.

In accordance with a further aspect of the present invention there is provided a portable imaging system for viewing distant objects comprising an optical lensing system for magnifying a viewed distant object; a sensing system for simultaneously sensing said viewed distant object; a processor means interconnected to said sensing system for processing said sensed image and forwarding it to a printer mechanism; and a printer mechanism connected to said processor means for printing out on print media said sensed image on demand by said portable imaging system.

Preferably the system further comprises a detachable print media supply means provided in a detachable module for interconnection with said printer mechanism for the supply of a roll of print media and ink to said printer mechanism.

The printer mechanism can comprise an ink jet printing mechanism providing a full color printer for the output of sensed images.

Further, the preferred embodiment is implemented as a system of binoculars with a beam splitting device which projects said distant object onto said sensing system.

In accordance with a further aspect of the present invention, there is provided a system for playing prerecorded audio encoded in a fault tolerant manner as a series of dots printed on a card, the system comprising an optical scanner means for scanning the visual form of the prerecorded audio; a processor means interconnected to the optical scanner means for decoding the scanned audio encoding to produce a corresponding audio signal; and audio emitter means interconnected to the processor means for emitting or playing the corresponding audio signal on demand.

The encoding can include Reed-Solomon encoding of the prerecorded audio and can comprise an array of ink dots which are high frequency modulated to aid scanning.

The system can include a wand-like arm having a slot through which is inserted the card.

In accordance with a further aspect of the present invention, there is provided a method of information distribution on printed cards, the method comprising the steps of dividing the surface of the card into a number of predetermined areas; printing a first collection of data to be stored in a first one of the predetermined areas; utilising the printed first predetermined area when reading information stored on the card; and, when the information stored on the card is to be updated, determining a second one of the predetermined areas to print further information stored on the card, the second area not having being previously utilized to print data.

Preferably, the areas are selected in a predetermined order and the printing utilizes a high resolution ink dot printer for printing data having a degree of fault tolerance with the fault tolerance, for example, coming from Reed-Solomon encoding of the data. Printed border regions delineating the border of the area can be provided, in addition to a number of border target markers to assist in indicating the location of the regions. The border targets can comprise a large area of a first colour with a small region of a second colour located centrally in the first area.

Preferably, the data is printed utilising a high frequency modulating signal such as a checkerboard pattern. The printing can be an array of dots having a resolution of greater then substantially 1200 dots per inch and preferably at least 1600 dots per inch. The predetermined areas can be arranged in a regular array on the surface of the card and the card can be of a generally rectangular credit card sized shape.

In accordance with a further aspect of the present invention, there is provided a method of creating a set of instructions for the manipulation of an image, the method comprising the steps of displaying an initial array of sample images for a user to select from; accepting a user's selection of at least one of the sample images; utilizing attributes of the images selected to produce a further array of sample images; iteratively applying the previous steps until such time as the user selects at least one final suitable image; utilising the steps used in the creation of the sample image as the set of instructions; outputting the set of instructions.

The method can further include scanning a user's photograph and utilising the scanned photograph as an initial image in the creation of each of the sample images. The instructions can be printed out in an encoded form on one surface of a card in addition to printing out a visual representation of the instructions on a second surface of the card. Additionally, the manipulated image can itself be printed out.

Various techniques can be used in the creation of images including genetic algorithm or genetic programming techniques to create the array. Further, 'best so far' images can be saved for use in the creation of further images.

The method is preferably implemented in the form of a computer system incorporated into a vending machine for dispensing cards and photos.

In accordance with a further aspect of the present invention, there is provided an information storage apparatus for storing information on inserted cards the apparatus comprising a sensing means for sensing printed patterns on the surface stored on the card, the patterns arranged in a predetermined number of possible active areas of the card; a decoding means for decoding the sensed printed patterns into corresponding data; a printing means for printing dot patterns on the card in at least one of the active areas; a positioning means for positioning the sensed card at known locations relative to the sensing means and the printing means; wherein the sensing means is adapted to sense the printed patterns in a current active printed area of the card, the decoding means is adapted to decode the sensed printed patterns into corresponding current data and, when the current data requires updating, the printing means is adapted to print the updated current data at a new one of the active areas after activation of the positioning means for correctly position the card.

Preferably, the printing means comprises an ink jet printer device having a card width print head able to print a line width of the card at a time. The positioning means can comprise a series of pinch rollers to pinch the card and control the movement of the card. The printed patterns can be laid out in a fault tolerant manner, for

example, using Reed – Solomon decoding, and the decoding means includes a suitable decoder for the fault tolerant pattern.

In accordance with a further aspect of the present invention, there is provided a digital camera system comprising an image sensor for sensing an image; storage means for storing the sensed image and associated system structures; data input means for the insertion of an image modification data module for modification of the sensed image; processor means interconnected to the image sensor, the storage means and the data input means for the control of the camera system in addition to the manipulation of the sensed image; printer means for printing out the sensed image on demand on print media supplied to the printer means; and a method of providing an image modification data module adapted to cause the processor means to modify the operation of the digital camera system upon the insertion of further image modification modules.

Preferably, the image modification data module comprises a card having the data encoded on the surface thereof and the data encoding is in the form of printing and the data input means includes an optical scanner for scanning a surface of the card. The modification of operation can include applying each image modification in turn of a series of inserted image modification modules to the same image in a repetitive manner.

In accordance with a further aspect of the present invention, there is provided a digital camera system comprising an image sensor for sensing an image; storage means for storing the sensed image and associated system structures; data input means for the insertion of an image modification data module for modification of the sensed image; processor means interconnected to the image sensor, the storage means and the data input means for the control of the camera system in addition to the manipulation of the sensed image; printer means for printing out the sensed image on demand on print media supplied to the printer means; including providing an image modification data module adapted to cause the processor means to perform a series of diagnostic tests on the digital camera system and to print out the results via the printer means.

Preferably, the image modification module can comprise a card having instruction data encoded on one surface thereof and the processor means includes means for interpreting the instruction data encoded on the card. The diagnostic tests can include a cleaning cycle for the printer means so as to improve the operation of the printer means such as by printing a continuous all black strip. Alternatively, the diagnostic tests can include modulating the operation of the nozzles so as to improve the operation of the ink jet printer. Additionally, various internal operational parameters of the camera system can be printed out. Where the camera system is equipped with a gravitational shock sensor, the diagnostic tests can include printing out an extreme value of the sensor.

In accordance with a further aspect of the present invention, there is provided a camera system for the creation of images, the camera system comprising a sensor for sensing an image; a processing means for processing the sensed image in accordance with any predetermined processing requirements; a printer means for printing the sensed image on the surface of print media, the print media including a magnetically sensitive surface; a magnetic recording means for recording associated information on the magnetically sensitive surface.

The associated information can comprises audio information associated with the sensed image and the printer means preferably prints the sensed image on a first surface of the print media and the magnetic recording means records the associated information on a second surface of the print media. The print media can be stored on an

internal detachable roll in the camera system. In one embodiment, the magnetic sensitive surface can comprise a strip affixed to the back surface of the print media.

In accordance with a further aspect of the present invention, there is provided a method of creating a permanent copy of an image captured on an image sensor of a handheld camera device having an interconnected integral computer device and an integral printer means for printing out on print media stored with the camera device, the method comprising the steps of sensing an image on the image sensor; converting the image to an encoded form of the image, the encoded form having fault tolerant encoding properties; printing out the encoded form of the image as a permanent record of the image utilizing the integral printer means.

Preferably, the integral printer means includes means for printing on a first and second surface of the print media and the sensed image or a visual manipulation thereof is printed on the first surface thereof and the encoded form is printed on the second surface thereof. A thumbnail of the sensed image can be printed alongside the encoded form of the image and the fault tolerant encoding can include forming a Reed-Solomon encoded version of the image in addition to applying a high frequency modulation signal such as a checkerboard pattern to the encoded form such that the permanent record includes repeatable high frequency spectral components. The print media can be supplied in a print roll means which is detachable from the camera device.

In accordance with a first aspect of the present invention, there is provided a distribution system for the distribution of image manipulation cards for utilization in camera devices having a card manipulation interface for the insertion of the image manipulation cards for the manipulation of images within the camera devices, the distribution system including a plurality of printer devices for outputting the image manipulation cards; each of the printer devices being interconnected to a corresponding computer system for the storage of a series of image manipulation card data necessary for the construction of the image manipulation cards; the computer systems being interconnected via a computer network to a card distribution computer responsible for the distribution of card lists to the computer systems for printing out corresponding cards by the printer systems.

Preferably the computer systems store the series of image manipulation card data in a cached manner over the computer network and card distribution computer is also responsible for the distribution of new image manipulation cards to the computer systems.

The present invention has particular application when the image manipulation cards include seasonal event cards which are distributed to the computer systems for the printing out of cards for utilization in respect of seasonal events.

In accordance with a further aspect of the present invention, there is provided a data structure encoded on the surface of an object comprising a series of block data regions with each of the block data regions including: an encoded data region containing data to be decoded in an encoded form; a series of clock marks structures located around a first peripheral portion of the encoded data region; and a series of easily identifiable target structures located around a second peripheral portion of the encoded data region.

The block data regions can further include an orientation data structure located round a third peripheral portion of the encoded data region. The orientation data structure can comprises a line of equal data points along an edge of the peripheral portion.

The clock marks structures can include a first line of equal data points in addition to a substantially adjacent

second line of alternating data points located along an edge of the encoded data region. The clock mark structures can be located on mutually opposite sides of the encoded data region.

The target structures can comprise a series of spaced apart block sets of data points having a substantially constant value of a first magnitude except for a core portion of a substantially opposite magnitude to the first magnitude. The block sets can further includes a target number indicator structure comprising a contiguous group of the values of the substantially opposite magnitude.

The data structure is ideally utilized in a series of printed dots on a substrate surface.

In accordance with a second aspect of the present invention, there is provided a method of decoding a data structure encoded on the surface of an object, the data structure comprising a series of block data regions with each of the block data regions including: an encoded data region containing data to be decoded in an encoded form; a series of clock marks structures located around a first peripheral portion of the encoded data region; a series of easily identifiable target structures located around a second peripheral portion of the encoded data region; the method comprising the steps of: (a) scanning the data structure; (b) locating the start of the data structure; (c) locating the target structures including determining a current orientation of the target structures; (d) locating the clock mark structures from the position of the target structures; (e) utilizing the clock mark structures to determine an expected location of bit data of the encoded data region; and (f) determining an expected data value for each of the bit data.

The clock marks structures can include a first line of equal data points in addition to a substantially adjacent second line of alternating data points located along an edge of the encoded data region and the utilising step (e) can comprise running along the second line of alternating data points utilizing a pseudo phase locked loop type algorithm so as to maintain a current location within the clock mark structures.

Further, the determining step (f) can comprise dividing a sensed bit value into three contiguous regions comprising a middle region and a first lower and a second upper extreme regions, and with those values within a first lower region, determining the corresponding bit value to be a first lower value; with those values within a second upper region, determining the corresponding bit value to be a second upper value; and with those values in the middle regions, utilising the spatially surrounding values to determine whether the value is of a first lower value or a second upper value.

In accordance with a further aspect of the present invention, there is provided a method of determining an output data value of sensed data comprising: (a) dividing a sensed data value into three contiguous regions comprising a middle region and a first lower and a second upper extreme regions, and, with those values within a first lower region, determining the corresponding bit value to be a first lower value; with those values within a second upper region, determining the corresponding bit value to be a second upper value; and with those values in the middle regions, utilising the spatially surrounding values to determine whether the value is of a first lower value or a second upper value.

In accordance with a further aspect of the present invention, there is provided a fluid supply means for supplying a plurality of different fluids to a plurality of different supply slots, wherein the supply slots are being spaced apart at periodic intervals in an interleaved manner, the fluid supply means comprising a fluid inlet means for each of the plurality of different fluids, a main channel flow means for each of the different fluids, connected to said

fluid inlet means and running past each of the supply slots, and sub-channel flow means connecting each of the supply slots to a corresponding main channel flow means. The number of fluids is greater than 2 and at least two of the main channel flow means run along the first surface of a moulded flow supply unit and another of the main channel flow means runs along the top surface of the moulded piece with the subchannel flow means being interconnected with the slots by means of through-holes through the surface of the moulded piece.

Preferably, the supply means is plastic injection moulded and the pitch rate of the slots is substantially less than, or equal to 1,000 slots per inch. Further the collection of slots runs substantially the width of a photograph. Preferably, the fluid supply means further comprises a plurality of roller slot means for the reception of one or more pinch rollers and the fluid comprises ink and the rollers are utilised to control the passage of a print media across a print-head interconnected to the slots. The slots are divided into corresponding colour slots with each series of colour slots being arranged in columns.

Preferably, at least one of the channels of the fluid supply means is exposed when fabricated and is sealed by means of utilising sealing tape to seal the exposed surface of the channel. Advantageously, the fluid supply means is further provided with a TAB slot for the reception of tape automated bonded (TAB) wires.

In accordance with a further aspect of the present invention, there is provided a fluid supply means for supplying a plurality of different fluids to a plurality of different supply slots, wherein the supply slots are being spaced apart at periodic intervals in an interleaved manner, the fluid supply means comprising a fluid inlet means for each of the plurality of different fluids, a main channel flow means for each of the different fluids, connected to said fluid inlet means and running past each of the supply slots, and sub-channel flow means connecting each of the supply slots to a corresponding main channel flow means. The number of fluids is greater than 2 and at least two of the main channel flow means run along the first surface of a moulded flow supply unit and another of the main channel flow means runs along the top surface of the moulded piece with the subchannel flow means being interconnected with the slots by means of through-holes through the surface of the moulded piece.

Preferably, the supply means is plastic injection moulded and the pitch rate of the slots is substantially less than, or equal to 1,000 slots per inch. Further the collection of slots runs substantially the width of a photograph. Preferably, the fluid supply means further comprises a plurality of roller slot means for the reception of one or more pinch rollers and the fluid comprises ink and the rollers are utilised to control the passage of a print media across a print-head interconnected to the slots. The slots are divided into corresponding colour slots with each series of colour slots being arranged in columns.

Preferably, at least one of the channels of the fluid supply means is exposed when fabricated and is sealed by means of utilising sealing tape to seal the exposed surface of the channel. Advantageously, the fluid supply means is further provided with a TAB slot for the reception of tape automated bonded (TAB) wires.

In accordance with a further aspect of the present invention, there is provided a printer mechanism for printing images utilizing at least one ink ejection mechanism supplied through an ink supply channel, the mechanism comprising a series of ink supply portals at least one per output color, adapted to engage a corresponding ink supply mechanism for the supply of ink to the printer; a series of conductive connector pads along an external surface of the printer mechanism; a page width print head having a series of ink ejection

mechanisms for the ejection of ink; an ink distribution system for distribution of ink from the ink supply portals to the ink ejection mechanisms of the page width print head; a plurality of interconnect control wires interconnecting the page width print head to the conductive connector pads; wherein the printer mechanism is adapted to be detachably inserted in a housing mechanism containing interconnection portions for interconnecting to the conductive connector pads and the ink supply connector of interconnection to the ink supply portals for the supply of ink by the ink supply mechanism.

Preferably, the plurality of interconnect control wires form a tape automated bonded sheet which wraps around an external surface of the printer mechanism and which is interconnected to the conductive connector pads. The interconnect control wires can comprise a first set of wires interconnecting the conductive connector pads and running along the length of the print head, substantially parallel to one another and a second set of wires running substantially parallel to one another from the surface of the print head, each of the first set of wires being interconnected to a number of the second set of wires. The ink supply portals can include a thin diaphragm portion which is pierced by the ink supply connector upon insertion into the housing mechanism.

The page width print head can includes a number of substantially identical repeatable units each containing a predetermined number of ink ejection mechanisms, each of the repeatable units including a standard interface mechanism containing a predetermined number of interconnect wires, each of the standard interface mechanism interconnecting as a group with the conductive connector pads. The print head itself can be conducted from a silicon wafer, separated into page width wide strips.

In accordance with a further aspect of the present invention there is provided a method of providing for resistance to monitoring of an integrated circuit by means of monitoring current changes, said method comprising the step of including a spurious noise generation circuit as part of said integrated circuit.

The noise generation circuit can comprises a random number generator such as a LFSR (Linear Feedback Shift Register).

In accordance with a further aspect of the present invention there is provided a CMOS circuit having a low power consumption, said circuit including a p-type transistor having a gate connected to a first clock and to an input and an n-type transistor connected to a second clock and said input and wherein said CMOS circuit is operated by transitioning said first and second clocks wherein said transitions occur in a non-overlapping manner.

The circuit can be positioned substantially adjacent a second circuit having high power switching characteristics. The second circuit can comprise a noise generation circuit.

In accordance with a further aspect of the present invention, there is provided a method of providing for resistance to monitoring of an memory circuit having multiple level states corresponding to different output states, said method comprising utilizing the intermediate states only for valid output state. The memory can comprise flash memory and can further include one or more parity bits.

In accordance with a further aspect of the present invention, there is provided a method of providing for resistance to tampering of an integrated circuit comprising utilizing a circuit path attached to a random noise generator to monitor attempts at tampering with the integrated circuit.

The circuit path can include a first path and a second path which are substantially inverses of one another and which are further connected to various test circuitry and which are exclusive ORed together to produce a

reset output signal. The circuit paths can substantially cover the random noise generator.

In accordance with a second aspect of the present invention, there is provided a tamper detection line connected at one end to a large resistance attached to ground and at a second end to a second large resistor attached to a power supply, the tamper detection line further being interconnected to a comparator that compares against the expected voltage to within a predetermined tolerance, further in between the resistance are interconnected a series of test, each outputting a large resistance such that if tampering is detected by one of the tests the comparator is caused to output a reset signal.

In accordance with a further aspect of the present invention there is provided an authentication system for determining the validity of an attached unit to be authenticated comprising: a central system unit for interrogation of first and second secure key holding units; first and second secure key holding objects attached to the central system unit, wherein the second key holding object is further permanently attached to the attached unit; wherein the central system unit is adapted to interrogate the first secure key holding object so as to determine a first response and to utilize the first response to interrogate the second secure key holding object to determine a second response, and to further compare the first and second response to determine whether the second secure key holding object is attached to a valid attached unit.

The second secure key holding object can further include a response having an effectively monotonically decreasing magnitude factor such that, after a predetermined utilization of the attached unit, the attached unit ceases to function. Hence the attached unit can comprises a consumable product.

Further, the the central system unit can interrogate the first secure key holding object with a substantially random number to receives the first response, the central system then utilizes the first response in the interrogation of the second secure key holding object to determine the second response, the central system unit then utilizes the second response to interrogate the first secure key holding unit to determine a validity measure of the second response.

The system is ideally utilized to authenticate a consumable for a printer such as ink for an ink jet printer.

Indeed the preferred embodiment will specifically be discussed with reference to the consumable of ink in a camera system having an internal ink jet printer although the present invention is not limited thereto.

Brief Description of the Drawings

Notwithstanding any other forms which may fall within the scope of the present invention, preferred forms of the invention will now be described, by way of example only, with reference to the accompanying drawings in which:

Fig. 1 illustrates an Artcam device constructed in accordance with the preferred embodiment.

Fig. 2 is a schematic block diagram of the main Artcam electronic components.

Fig. 3 is a schematic block diagram of the Artcam Central Processor.

Fig. 3(a) illustrates the VLIW Vector Processor in more detail.

Fig. 4 illustrates the Processing Unit in more detail.

Fig. 5 illustrates the ALU 188 in more detail.

Fig. 6 illustrates the In block in more detail.

Fig. 7 illustrates the Out block in more detail.

Fig. 8 illustrates the Registers block in more detail.

Fig. 9 illustrates the Crossbar1 in more detail.

Fig. 10 illustrates the Crossbar2 in more detail.

Fig. 11 illustrates the read process block in more detail.

Fig. 12 illustrates the read process block in more detail.

Fig. 13 illustrates the barrel shifter block in more detail.

Fig. 14 illustrates the adder/logic block in more detail.

Fig. 15 illustrates the multiply block in more detail.

Fig. 16 illustrates the I/O address generator block in more detail.

Fig. 17 illustrates a pixel storage format.

Fig. 18 illustrates a sequential read iterator process.

Fig. 19 illustrates a box read iterator process.

Fig. 20 illustrates a box write iterator process.

Fig. 21 illustrates the vertical strip read/write iterator process.

Fig. 22 illustrates the vertical strip read/write iterator process.

Fig. 23 illustrates the generate sequential process.

Fig. 24 illustrates the generate sequential process.

Fig. 25 illustrates the generate vertical strip process.

Fig. 26 illustrates the generate vertical strip process.

Fig. 27 illustrates a pixel data configuration.

Fig. 28 illustrates a pixel processing process.

Fig. 29 illustrates a schematic block diagram of the display controller.

Fig. 30 illustrates the CCD image organization.

Fig. 31 illustrates the storage format for a logical image.

Fig. 32 illustrates the internal image memory storage format.

Fig. 33 illustrates the image pyramid storage format.

Fig. 34 illustrates a time line of the process of sampling an Artcard.

Fig. 35 illustrates the super sampling process.

Fig. 36 illustrates the process of reading a rotated Artcard.

Fig. 37 illustrates a flow chart of the steps necessary to decode an Artcard.

Fig. 38 illustrates an enlargement of the left hand corner of a single Artcard.

Fig. 39 illustrates a single target for detection.

Fig. 40 illustrates the method utilised to detect targets.

Fig. 41 illustrates the method of calculating the distance between two targets.

Fig. 42 illustrates the process of centroid drift.

Fig. 43 shows one form of centroid lookup table.

Fig. 44 illustrates the centroid updating process.

Fig. 45 illustrates a delta processing lookup table utilised in the preferred embodiment.

Fig. 46 illustrates the process of unscrambling Artcard data.

Fig. 47 illustrates a magnified view of a series of dots.

Fig. 48 illustrates the data surface of a dot card.

Fig. 49 illustrates schematically the layout of a single datablock.

Fig. 50 illustrates a single datablock.

Fig. 51 and Fig. 52 illustrate magnified views of portions of the datablock of Fig. 50.

Fig. 53 illustrates a single target structure.

Fig. 54 illustrates the target structure of a datablock.

Fig. 55 illustrates the positional relationship of targets relative to border clocking regions of a data region.

Fig. 56 illustrates the orientation columns of a datablock.

Fig. 57 illustrates the array of dots of a datablock.

Fig. 58 illustrates schematically the structure of data for Reed-Solomon encoding.

Fig. 59 illustrates an example Reed-Solomon encoding.

Fig. 60 illustrates the Reed-Solomon encoding process.

Fig. 61 illustrates the layout of encoded data within a datablock.

Fig. 62 illustrates the sampling process in sampling an alternative Artcard.

Fig. 63 illustrates, in exaggerated form, an example of sampling a rotated alternative Artcard.

Fig. 64 illustrates the scanning process.

Fig. 65 illustrates the likely scanning distribution of the scanning process.

Fig. 66 illustrates the relationship between probability of symbol errors and Reed-Solomon block errors.

Fig. 67 illustrates a flow chart of the decoding process.

Fig. 68 illustrates a process utilization diagram of the decoding process.

Fig. 69 illustrates the dataflow steps in decoding.

Fig. 70 illustrates the reading process in more detail.

Fig. 71 illustrates the process of detection of the start of an alternative Artcard in more detail.

Fig. 72 illustrates the extraction of bit data process in more detail.

Fig. 73 illustrates the segmentation process utilized in the decoding process.

Fig. 74 illustrates the decoding process of finding targets in more detail.

Fig. 75 illustrates the data structures utilized in locating targets.

Fig. 76 illustrates the Lancos 3 function structure.

Fig. 77 illustrates an enlarged portion of a datablock illustrating the clockmark and border region.

Fig. 78 illustrates the processing steps in decoding a bit image.

Fig. 79 illustrates the dataflow steps in decoding a bit image.

Fig. 80 illustrates the descrambling process of the preferred embodiment.

Fig. 81 illustrates one form of implementation of the convolver.

Fig. 82 illustrates a convolution process.

Fig. 83 illustrates the compositing process.

Fig. 84 illustrates the regular compositing process in more detail.

Fig. 85 illustrates the process of warping using a warp map.

Fig. 86 illustrates the warping bi-linear interpolation process.

Fig. 87 illustrates the process of span calculation.

Fig. 88 illustrates the basic span calculation process.

Fig. 89 illustrates one form of detail implementation of the span calculation process.

Fig. 90 illustrates the process of reading image pyramid levels.

Fig. 91 illustrates using the pyramid table for blinear interpolation.

Fig. 92 illustrates the histogram collection process.

Fig. 93 illustrates the color transform process.

Fig. 94 illustrates the color conversion process.

Fig. 95 illustrates the color space conversion process in more detail.

Fig. 96 illustrates the process of calculating an input coordinate.

Fig. 97 illustrates the process of compositing with feedback.

Fig. 98 illustrates the generalized scaling process.

Fig. 99 illustrates the scale in X scaling process.

Fig. 100 illustrates the scale in Y scaling process.

Fig. 101 illustrates the tessellation process.

Fig. 102 illustrates the sub-pixel translation process.

Fig. 103 illustrates the compositing process.

Fig. 104 illustrates the process of compositing with feedback.

Fig. 105 illustrates the process of tiling with color from the input image.

Fig. 106 illustrates the process of tiling with feedback.

Fig. 107 illustrates the process of tiling with texture replacement.

Fig. 108 illustrates the process of tiling with color from the input image.

Fig. 109 illustrates the process of applying a texture without feedback.

Fig. 110 illustrates the process of applying a texture with feedback.

Fig. 111 illustrates the process of rotation of CCD pixels.

Fig. 112 illustrates the process of interpolation of Green subpixels.

Fig. 113 illustrates the process of interpolation of Blue subpixels.

Fig. 114 illustrates the process of interpolation of Red subpixels.

Fig. 115 illustrates the process of CCD pixel interpolation with 0 degree rotation for odd pixel lines.

Fig. 116 illustrates the process of CCD pixel interpolation with 0 degree rotation for even pixel lines.

Fig. 117 illustrates the process of color conversion to Lab color space.

Fig. 118 illustrates the process of calculation of $1/\sqrt{X}$.

Fig. 119 illustrates the implementation of the calculation of $1/\sqrt{X}$ in more detail.

Fig. 120 illustrates the process of Normal calculation with a bump map.

Fig. 121 illustrates the process of illumination calculation with a bump map.

Fig. 122 illustrates the process of illumination calculation with a bump map in more detail.

Fig. 123 illustrates the process of calculation of L using a directional light.

Fig. 124 illustrates the process of calculation of L using a Omni lights and spotlights.

Fig. 125 illustrates one form of implementation of calculation of L using a Omni lights and spotlights.

Fig. 126 illustrates the process of calculating the N.L dot product.

Fig. 127 illustrates the process of calculating the N.L dot product in more detail.

Fig. 128 illustrates the process of calculating the R.V dot product.

Fig. 129 illustrates the process of calculating the R.V dot product in more detail.

Fig. 130 illustrates the attenuation calculation inputs and outputs.

Fig. 131 illustrates an actual implementation of attenuation calculation.

Fig. 132 illustrates an graph of the cone factor.

Fig. 133 illustrates the process of penumbra calculation.

Fig. 134 illustrates the angles utilised in penumbra calculation.

Fig. 135 illustrates the inputs and outputs to penumbra calculation.

Fig. 136 illustrates an actual implementation of penumbra calculation.

Fig. 137 illustrates the inputs and outputs to ambient calculation.

Fig. 138 illustrates an actual implementation of ambient calculation.

Fig. 139 illustrates an actual implementation of diffuse calculation.

Fig. 140 illustrates the inputs and outputs to a diffuse calculation.

Fig. 141 illustrates an actual implementation of a diffuse calculation.

Fig. 142 illustrates the inputs and outputs to a specular calculation.

Fig. 143 illustrates an actual implementation of a specular calculation.

Fig. 144 illustrates the inputs and outputs to a specular calculation.

Fig. 145 illustrates an actual implementation of a specular calculation.

Fig. 146 illustrates an actual implementation of a ambient only calculation.

Fig. 147 illustrates the process overview of light calculation.

Fig. 148 illustrates an example illumination calculation for a single infinite light source.

Fig. 149 illustrates an example illumination calculation for a Omni light source without a bump map.

Fig. 150 illustrates an example illumination calculation for a Omni light source with a bump map.

Fig. 151 illustrates an example illumination calculation for a Spotlight light source without a bump map.

Fig. 152 illustrates the process of applying a single Spotlight onto an image with an associated bump-map.

Fig. 153 illustrates the logical layout of a single printhead.

Fig. 154 illustrates the structure of the printhead interface.

Fig. 155 illustrates the process of rotation of a Lab image.

Fig. 156 illustrates the format of a pixel of the printed image.

Fig. 157 illustrates the dithering process.

Fig. 158 illustrates the process of generating an 8 bit dot output.

Fig. 159 illustrates a perspective view of the card reader.

Fig. 160 illustrates an exploded perspective of a card reader.

Fig. 161 illustrates a close up view of the Artcard reader.

Fig. 162 illustrates a perspective view of the print roll and print head.

Fig. 163 illustrates a first exploded perspective view of the print roll.

Fig. 164 illustrates a second exploded perspective view of the print roll.

Fig. 165 illustrates the print roll authentication chip.

Fig. 166 illustrates an enlarged view of the print roll authentication chip.

Fig. 167 illustrates a single authentication chip data protocol.

Fig. 168 illustrates a dual authentication chip data protocol.

Fig. 169 illustrates a first presence only protocol.

Fig. 170 illustrates a second presence only protocol.

Fig. 171 illustrates a third data protocol.

Fig. 172 illustrates a fourth data protocol.

Fig. 173 is a schematic block diagram of a maximal period LFSR.

Fig. 174 is a schematic block diagram of a clock limiting filter.

Fig. 175 is a schematic block diagram of the tamper detection lines.

Fig. 176 illustrates an oversized nMOS transistor.

Fig. 177 illustrates the taking of multiple XORs from the Tamper Detect Line

Fig. 178 illustrate how the Tamper Lines cover the noise generator circuitry.

Fig. 179 illustrates the normal form of FET implementation.

Fig. 180 illustrates the modified form of FET implementation of the preferred embodiment.

Fig. 181 illustrates a schematic block diagram of the authentication chip.

Fig. 182 illustrates an example memory map.

Fig. 183 illustrates an example of the constants memory map.

Fig. 184 illustrates an example of the RAM memory map.

Fig. 185 illustrates an example of the Flash memory variables memory map.

Fig. 186 illustrates an example of the Flash memory program memory map.

Fig. 187 shows the data flow and relationship between components of the State Machine.

Fig. 188 shows the data flow and relationship between components of the I/O Unit.

Fig. 189 illustrates a schematic block diagram of the Arithmetic Logic Unit.

Fig. 190 illustrates a schematic block diagram of the RPL unit.

Fig. 191 illustrates a schematic block diagram of the ROR block of the ALU.

Fig. 192 is a block diagram of the Program Counter Unit.

Fig. 193 is a block diagram of the Memory Unit.

Fig. 194 shows a schematic block diagram for the Address Generator Unit.

Fig. 195 shows a schematic block diagram for the JSIGEN Unit.

Fig. 196 shows a schematic block diagram for the JSRGEN Unit.

Fig. 197 shows a schematic block diagram for the DBRGEN Unit.

Fig. 198 shows a schematic block diagram for the LDKGEN Unit.

Fig. 199 shows a schematic block diagram for the RPLGEN Unit.

Fig. 200 shows a schematic block diagram for the VARGEN Unit.

Fig. 201 shows a schematic block diagram for the CLRGEN Unit.

Fig. 202 shows a schematic block diagram for the BITGEN Unit.

Fig. 203 sets out the information stored on the print roll authentication chip.

Fig. 204 illustrates the data stored within the Artcam authorization chip.

Fig. 205 illustrates the process of print head pulse characterization.

Fig. 206 is an exploded perspective, in section, of the print head ink supply mechanism.

Fig. 207 is a bottom perspective of the ink head supply unit.

Fig. 208 is a bottom side sectional view of the ink head supply unit.

Fig. 209 is a top perspective of the ink head supply unit.

Fig. 210 is a top side sectional view of the ink head supply unit.

Fig. 211 illustrates a perspective view of a small portion of the print head.

Fig. 212 illustrates is an exploded perspective of the print head unit.

Fig. 213 illustrates a top side perspective view of the internal portions of an Artcam camera, showing the parts flattened out.

Fig. 214 illustrates a bottom side perspective view of the internal portions of an Artcam camera, showing the parts flattened out.

Fig. 215 illustrates a first top side perspective view of the internal portions of an Artcam camera, showing the parts as encased in an Artcam.

Fig. 216 illustrates a second top side perspective view of the internal portions of an Artcam camera, showing the parts as encased in an Artcam.

Fig. 217 illustrates a second top side perspective view of the internal portions of an Artcam camera, showing the parts as encased in an Artcam.

Fig. 218 illustrates the backing portion of a postcard print roll.

Fig. 219 illustrates the corresponding front image on the postcard print roll after printing out images.

Fig. 220 illustrates a form of print roll ready for purchase by a consumer.

Fig. 221 illustrates a layout of the software/hardware modules of the overall Artcam application.

Fig. 222 illustrates a layout of the software/hardware modules of the Camera Manager.

Fig. 223 illustrates a layout of the software/hardware modules of the Image Processing Manager.

Fig. 224 illustrates a layout of the software/hardware modules of the Printer Manager.

Fig. 225 illustrates a layout of the software/hardware modules of the Image Processing Manager.

Fig. 226 illustrates a layout of the software/hardware modules of the File Manager.

Fig. 227 illustrates a perspective view, partly in section, of an alternative form of printroll.

Fig. 228 is a left side exploded perspective view of the print roll of Fig. 227.

Fig. 229 is a right side exploded perspective view of a single printroll.

Fig. 230 is an exploded perspective view, partly in section, of the core portion of the printroll.

Fig. 231 is a second exploded perspective view of the core portion of the printroll.

Fig. 232 illustrates a front view of a 'Bizcard'.

Fig. 233 illustrates schematically the camera system constructed in accordance to a further refinement.

Fig. 234 illustrates schematically a printer mechanism for printing on the front and back of output media.

Fig. 235 illustrates a format of the output data on the back of the photo.

Fig. 236 illustrates an enlarged portion of the output media.

Fig. 237 illustrates a reader device utilized to read data from the back of a photograph.

Fig. 238 illustrates the utilization of an apparatus of a further refinement.

Fig. 239 illustrates a schematic example of image orientation specific processing.

Fig. 240 illustrates a method of producing an image specific effect when utilizing a camera as constructed in accordance with a further refinement.

Fig. 241 illustrates a print roll in accordance with a further refinement.

Fig. 242 illustrates the method of a further refined embodiment.

Fig. 243 illustrates the method of operation of a further refinement.

Fig. 244 illustrates one form of image processing in accordance with a further refinement.

Fig. 245 illustrates the method of operation of a further refinement.

Fig. 246 illustrates the process of capturing and outputting an image.

Fig. 247 illustrates the process of red-eye removal.

Fig. 248 illustrates a photo printing arrangement as constructed in accordance with a standard artcam device.

Fig. 249 illustrates a dual print-head arrangement as constructed in accordance with a further refinement.

Fig. 250 illustrates the de-curling mechanism of a further refinement.

Fig. 251 illustrates the process of viewing a stereo photographic image.

Fig. 252 illustrates the rectilinear system of a further refinements designed to produce a stereo photographic effect.

Fig. 253 is a partial perspective view illustrating the creation of a stereo photographic image.

Fig. 254 illustrates an apparatus for producing stereo photographic images in accordance with a further refinements.

Fig. 255 illustrates the positioning unit of Fig. 254 in more detail.

Fig. 256 illustrates a camera device suitable for production of stereo photographic images.

Fig. 257 illustrates the process of using an opaque backing to improve the stereo photographic effect.

Fig. 258 illustrates schematically a method of creation of images on print media.

Fig. 259 and Fig. illustrate the structure of the printing media constructed in accordance with the present invention.

Fig. 260 illustrates utilization of the print media constructed in accordance with a further refinement.

Fig. 261 illustrates a first form of construction of print media in accordance with a further refinement.

Fig. 262 illustrates a further form of construction of print media in accordance with the present invention.

Fig. 263 and Fig. 264 illustrate schematic cross-sectional views of a further form of construction of print media in accordance with the present invention.

Fig. 265 illustrates one form of manufacture of the print media construction in accordance with Fig. 263 and 7.

Fig. 266 illustrates an alternative form of manufacture by extruding fibrous material for utilization with the arrangement of Fig. 265.

Fig. 267 illustrates the major steps in a further refinement.

Fig. 268 illustrates the Sobel filter co-efficients utilized within a further refinement.

Fig. 269 and Fig. 270 illustrate the process of offsetting curves utilized in a further refinements.

Fig. 271 illustrates a standard image including a face to be recognised.

Fig. 272 illustrates a fist flowchart for determining a region of interest.

Fig. 273 illustrates a second flowchart for determining a region of interest.

Fig. 274 illustrates an initial process of tiling an image.

Fig. 275 illustrates an alternative tile pattern for tiling an image.

Fig. 276 illustrates a tile opacity mask.

Fig. 277 and Fig. 278 illustrate a corresponding surface texture height field for the tile of Fig. 276.

Fig. 279 illustrates the process of using a global opacity to modify the image.

Fig. 280 illustrates the process of modifying the stroking effect so as to simulate the effect of combining real paints.

Fig. 281 illustrates the process of brush stroke table creation.

Fig. 282 illustrates the process of creating stroke color palettes.

Fig. 283 illustrates the consequential painting process.

Fig. 284 illustrates a flow chart of the steps in a further embodiment in compositing brush strokes.

Fig. 285 illustrates the process conversion of Bezier curves to piecewise line segments.

Fig. 286 illustrates the brush stroking process.

Fig. 287 illustrates suitable brush stamps for use by a further embodiment.

Fig. 288 illustrates a first arrangement of a further refinement.

Fig. 289 illustrates a flow chart of the operation of a further refinement.

Fig. 290 illustrates the structure of a high resolution printed image.

Fig. 291 illustrates an apparatus for process the image of Fig. 290 so as to produce a copy.

Fig. 292 illustrates the centroid processing steps.

Fig. 293 illustrates a series of likely sensed pattern.

Fig. 294 illustrates a schematic implementation of a further refinement.

Fig. 295 illustrates a further refinement.

Fig. 296 illustrates the card reading arrangement of a further embodiment.

Fig. 297 and Fig. 298 illustrate a brush bump map.

Fig. 299 and Fig. 300 illustrate a background canvas bump map.

Fig. 301 and Fig. 302 illustrate the process of combining bump maps.

Fig. 303 illustrates a background of the map.

Fig. 304 and Fig. 305 illustrate the process of combining bump maps in accordance with a further refinement.

Fig. 306 illustrates the steps in the method of a further refinement in production of an artistic image.

Fig. 307 illustrates the process of mapping one gamut to a second gamut.

Fig. 308 illustrates one form of implementation of a further refinement.

Fig. 309 illustrates the preferred form of gamut remapping.

Fig. 310 illustrates one form of gamut morphing as utilized in a further refinement.

Fig. 311 illustrates the basic operation of an Artcam device.

Fig. 312 illustrates a series of Artcards for use with a further refinement.

Fig. 313 is a flow diagram of the algorithm utilized by a further refinement.

Fig. 314 is a schematic illustration of the outputting of printed fabrics produced in accordance with the present invention.

Fig. 315 illustrates the form of interconnection of a further refinement.

Fig. 316 illustrates a perspective view, partly in section of a further refinement.

Fig. 317 illustrates a card having an array of written data areas.

Fig. 318 illustrates a card having only a limited number of written data areas.

Fig. 319 illustrates the structure of a data area.

Fig. 320 illustrates the structure of a target.

Fig. 321 illustrates an apparatus of a further refinement.

Fig. 322 illustrates a closer view of Fig. 321.

Fig. 323 illustrates the process of inserting a card into a reader device.

Fig. 324 illustrates the process of ejecting a card.

Fig. 325 illustrates the process of writing a data area on a card.

Fig. 326 is a schematic of the architecture of a card reader.

Fig. 327 is a schematic arrangement of a further refinement.

Fig. 328 illustrates an example interface of a further refinement.

Fig. 329 illustrates one form of arrangement of software modules within a further refinement.

Fig. 330 is a schematic of the operation of an Artcam system.

Fig. 331 illustrates a first example modified operation of a Artcam system.

Fig. 332 illustrates a repetition card which modifies the operation of that Artcam device.

Fig. 333 illustrates a Artcard test card for modification of the operation of an Artcam device.

Fig. 334 illustrates the output test results of an Artcam device.

Fig. 335 illustrates schematically the camera system constructed in accordance to a further refinement.

Fig. 336 illustrates schematically a printer mechanism and recording mechanism of a further refinement.

Fig. 337 illustrates a format of the magnetic strip on the back of the photo.

Fig. 338 illustrates a reader device utilized to read data recorded on the back of a photograph.

Fig. 339 illustrates the utilization of an apparatus of a further refinement.

Fig. 340 illustrates a schematic of the functional portions an Artcam device.

Fig. 341 illustrates the steps utilizing a further refinement.

Fig. 342 illustrates the operation of an Artcam device in accordance with a further refinement.

Fig. 343 illustrates an alternative embodiment of printing out on the back surface of an output "photo".

Fig. 344 illustrates the internal portions of a printer device constructed in accordance with a further embodiment.

Fig. 345 illustrates a network distribution system as constructed in accordance with a further embodiment.

Fig. 346 illustrates schematically the operation of a printer computer of Fig. 345.

Description of Preferred and Other Embodiments

The digital image processing camera system constructed in accordance with the preferred embodiment is as illustrated in Fig. 1. The camera unit 1 includes means for the insertion of an integral print roll (not shown). The camera unit 1 can include an area image sensor 2 which sensors an image 3 for captured by the camera. Optionally, the second area image sensor can be provided to also image the scene 3 and to optionally provide for the production of stereographic output effects.

The camera 1 can include an optional color display 5 for the display of the image being sensed by the sensor 2. When a simple image is being displayed on the display 5, the button 6 can be depressed resulting in the printed image 8 being output by the camera unit 1. A series of cards, herein after known as "Artcards" 9 contain, on one surface encoded information and on the other surface, contain an image distorted by the particular effect produced by the Artcard 9. The Artcard 9 is inserted in an Artcard reader 10 in the side of camera 1 and, upon insertion, results in output image 8 being distorted in the same manner as the distortion appearing on the surface of Artcard 9. Hence, by means of this simple user interface a user wishing to produce a particular effect can insert one of many Artcards 9 into the Artcard reader 10 and utilize button 19 to take a picture of the image 3 resulting in a corresponding distorted output image 8.

The camera unit 1 can also include a number of other control button 13, 14 in addition to a simple LCD output display 15 for the display of informative information including the number of printouts left on the internal print roll on the camera unit. Additionally, different output formats can be controlled by CHP switch 17.

Turning now to Fig. 2, there is illustrated a schematic view of the internal hardware of the camera unit 1. The internal hardware is based around an Artcam central processor unit (ACP) 31.

Artcam Central Processor 31

The Artcam central processor 31 provides many functions which form the 'heart' of the system. The ACP 31 is preferably implemented as a complex, high speed, CMOS system on-a-chip. Utilising standard cell design with some full custom regions is recommended. Fabrication on a 0.25μ CMOS process will provide the density and speed required, along with a reasonably small die area.

The functions provided by the ACP 31 include:

1. Control and digitization of the area image sensor 2. A 3D stereoscopic version of the ACP requires two area image sensor interfaces with a second optional image sensor 4 being provided for stereoscopic effects.
2. Area image sensor compensation, reformatting, and image enhancement.
3. Memory interface and management to a memory store 33.
4. Interface, control, and analog to digital conversion of an Artcard reader linear image sensor 34 which is provided for the reading of data from the Artcards 9.
5. Extraction of the raw Artcard data from the digitized and encoded Artcard image.
6. Reed-Solomon error detection and correction of the Artcard encoded data. The encoded surface of the Artcard 9 includes information on how to process an image to produce the effects displayed on the image distorted surface of the Artcard 9. This information is in the form of a script, hereinafter known as a "Vark script". The Vark script is utilised by an interpreter running within the ACP 31 to produce the desired effect.
7. Interpretation of the Vark script on the Artcard 9.
8. Performing image processing operations as specified by the Vark script.

9. Controlling various motors for the paper transport 36, zoom lens 38, autofocus 39 and Artcard driver 37.

10. Controlling a guillotine actuator 40 for the operation of a guillotine 41 for the cutting of photographs 8 from print roll 42.

11. Half-toning of the image data for printing.

12. Providing the print data to a print-head 44 at the appropriate times.

13. Controlling the print head 44.

14. Controlling the ink pressure feed to print-head 44.

15. Controlling optional flash unit 56.

16. Reading and acting on various sensors in the camera, including camera orientation sensor 46, autofocus 47 and Artcard insertion sensor 49.

17. Reading and acting on the user interface buttons 6, 13, 14.

18. Controlling the status display 15.

19. Providing viewfinder and preview images to the color display 5.

20. Control of the system power consumption, including the ACP power consumption via power management circuit 51 .

21. Providing external communications 52 to general purpose computers (using part USB).

22. Reading and storing information in a printing roll authentication chip 53.

23. Reading and storing information in a camera authentication chip 54.

24. Communicating with an optional mini-keyboard 57 for text modification.

Quartz crystal 58

A quartz crystal 58 is used as a frequency reference for the system clock. As the system clock is very high, the ACP 31 includes a phase locked loop clock circuit to increase the frequency derived from the crystal 58.

Image Sensing

Area image sensor 2

The area image sensor 2 converts an image through its lens into an electrical signal. It can either be a charge coupled device (CCD) or an active pixel sensor (APS)CMOS image sector. At present, available CCD's normally have a higher image quality, however, there is currently much development occurring in CMOS imagers. CMOS imagers are eventually expected to be substantially cheaper than CCD's have smaller pixel areas, and be able to incorporate drive circuitry and signal processing. They can also be made in CMOS fabs, which are transitioning to 12" wafers. CCD's are usually built in 6" wafer fabs, and economics may not allow a conversion to 12" fabs. Therefore, the difference in fabrication cost between CCD's and CMOS imagers is likely to increase, progressively favoring CMOS imagers. However, at present, a CCD is probably the best option.

The Artcam unit will produce suitable results with a 1,500 x 1,000 area image sensor. However, smaller sensors, such as 750 x 500, will be adequate for many markets. The Artcam is less sensitive to image sensor resolution than are conventional digital cameras. This is because many of the styles contained on Artcards 9 process the image in such a way as to obscure the lack of resolution. For example, if the image is distorted to simulate the effect of being converted to an impressionistic painting, low source image resolution can be used with minimal effect. Further examples for which low resolution input images will typically not be noticed include image warps which produce high

distorted images, multiple miniature copies of the of the image (eg. passport photos), textural processing such as bump mapping for a base relief metal look, and photo-compositing into structured scenes.

This tolerance of low resolution image sensors may be a significant factor in reducing the manufacturing cost of an Artcam unit 1 camera. An Artcam with a low cost 750 x 500 image sensor will often produce superior results to a conventional digital camera with a much more expensive 1,500 x 1,000 image sensor.

Optional stereoscopic 3D image sensor 4

The 3D versions of the Artcam unit 1 have an additional image sensor 4, for stereoscopic operation. This image sensor is identical to the main image sensor. The circuitry to drive the optional image sensor may be included as a standard part of the ACP chip 31 to reduce incremental design cost. Alternatively, a separate 3D Artcam ACP can be designed. This option will reduce the manufacturing cost of a mainstream single sensor Artcam.

Print roll authentication chip 53

A small chip 53 is included in each print roll 42. This chip replaced the functions of the bar code, optical sensor and wheel, and ISO/ASA sensor on other forms of camera film units such as Advanced Photo Systems film cartridges.

The authentication chip also provides other features:

1. The storage of data rather than that which is mechanically and optically sensed from APS rolls
2. A remaining media length indication, accurate to high resolution.
3. Authentication Information to prevent inferior clone print roll copies.

The authentication chip 53 contains 1024 bits of Flash memory, of which 128 bits is an authentication key, and 512 bits is the authentication information. Also included is an encryption circuit to ensure that the authentication key cannot be accessed directly.

Print-head 44

The Artcam unit 1 can utilize any color print technology which is small enough, low enough power, fast enough, high enough quality, and low enough cost, and is compatible with the print roll. Relevant printheads will be specifically discussed hereinafter.

The specifications of the ink jet head are:

Image type	Bi-level, dithered
Color	CMY Process Color
Resolution	1600 dpi
Print head length	'Page-width' (100mm)
Print speed	2 seconds per photo

Optional ink pressure Controller (not shown)

The function of the ink pressure controller depends upon the type of ink jet print head 44 incorporated in the Artcam. For some types of ink jet, the use of an ink pressure controller can be eliminated, as the ink pressure is simply atmospheric pressure. Other types of print head require a regulated positive ink pressure. In this case, the in pressure controller consists of a pump and pressure transducer.

Other print heads may require an ultrasonic transducer to cause regular oscillations in the ink pressure,

typically at frequencies around 100KHz. In the case, the ACP 31 controls the frequency phase and amplitude of these oscillations.

Paper transport motor 36

The paper transport motor 36 moves the paper from within the print roll 42 past the print head at a relatively constant rate. The motor 36 is a miniature motor geared down to an appropriate speed to drive rollers which move the paper. A high quality motor and mechanical gears are required to achieve high image quality, as mechanical rumble or other vibrations will affect the printed dot row spacing.

Paper transport motor driver 60

The motor driver 60 is a small circuit which amplifies the digital motor control signals from the APC 31 to levels suitable for driving the motor 36.

Paper pull sensor

A paper pull sensor 50 detects a user's attempt to pull a photo from the camera unit during the printing process. The APC 31 reads this sensor 50, and activates the guillotine 41 if the condition occurs. The paper pull sensor 50 is incorporated to make the camera more 'foolproof' in operation. Were the user to pull the paper out forcefully during printing, the print mechanism 44 or print roll 42 may (in extreme cases) be damaged. Since it is acceptable to pull out the 'pod' from a Polaroid type camera before it is fully ejected, the public has been 'trained' to do this. Therefore, they are unlikely to heed printed instructions not to pull the paper.

The Artcam preferably restarts the photo print process after the guillotine 41 has cut the paper after pull sensing.

The pull sensor can be implemented as a strain gauge sensor, or as an optical sensor detecting a small plastic flag which is deflected by the torque that occurs on the paper drive rollers when the paper is pulled. The latter implementation is recommendation for low cost.

Paper guillotine actuator 40

The paper guillotine actuator 40 is a small actuator which causes the guillotine 41 to cut the paper either at the end of a photograph, or when the paper pull sensor 50 is activated.

The guillotine actuator 40 is a small circuit which amplifies a guillotine control signal from the APC tot the level required by the actuator 41.

Artcard 9

The Artcard 9 is a program storage medium for the Artcam unit. As noted previously, the programs are in the form of Vark scripts. Vark is a powerful image processing language especially developed for the Artcam unit. Each Artcard 9 contains one Vark script, and thereby defines one image processing style.

Preferably, the VARK language is highly image processing specific. By being highly image processing specific, the amount of storage required to store the details on the card are substantially reduced. Further, the ease with which new programs can be created, including enhanced effects, is also substantially increased. Preferably, the language includes facilities for handling many image processing functions including image warping via a warp map, convolution, color lookup tables, posterizing an image, adding noise to an image, image enhancement filters, painting algorithms, brush jittering and manipulation edge detection filters, tiling, illumination via light sources, bump maps, text, face detection and object detection attributes, fonts, including three dimensional fonts, and arbitrary complexity pre-rendered icons. Further details of the operation of the Vark language interpreter are contained hereinafter.

Hence, by utilizing the language constructs as defined by the created language, new affects on arbitrary images can be created and constructed for inexpensive storage on Artcard and subsequent distribution to camera owners. Further, on one surface of the card can be provided an example illustrating the effect that a particular VARK script, stored on the other surface of the card, will have on an arbitrary captured image.

By utilizing such a system, camera technology can be distributed without a great fear of obsolescence in that, provided a VARK interpreter is incorporated in the camera device, a device independent scenario is provided whereby the underlying technology can be completely varied over time. Further, the VARK scripts can be updated as new filters are created and distributed in an inexpensive manner, such as via simple cards for card reading.

The Artcard 9 is a piece of thin white plastic with the same format as a credit card (86mm long by 54mm wide). The Artcard is printed on both sides using a high resolution ink jet printer. The inkjet printer technology is assumed to be the same as that used in the Artcam, with 1600 dpi (63dpmm) resolution. A major feature of the Artcard 9 is low manufacturing cost. Artcards can be manufactured at high speeds as a wide web of plastic film. The plastic web is coated on both sides with a hydrophilic dye fixing layer. The web is printed simultaneously on both sides using a 'pagewidth' color ink jet printer. The web is then cut and punched into individual cards. On one face of the card is printed a human readable representation of the effect the Artcard 9 will have on the sensed image. This can be simply a standard image which has been processed using the Vark script stored on the back face of the card.

On the back face of the card is printed an array of dots which can be decoded into the Vark script that defines the image processing sequence. The print area is 80mm x 50mm, giving a total of 15,876,000 dots. This array of dots could represent at least 1.89 Mbytes of data. To achieve high reliability, extensive error detection and correction is incorporated in the array of dots. This allows a substantial portion of the card to be defaced, worn, creased, or dirty with no effect on data integrity. The data coding used is Reed-Solomon coding, with half of the data devoted to error correction. This allows the storage of 967 Kbytes of error corrected data on each Artcard 9.

Linear image sensor 34

The Artcard linear sensor 34 converts the aforementioned Artcard data image to electrical signals. As with the area image sensor 2, 4, the linear image sensor can be fabricated using either CCD or APS CMOS technology. The active length of the image sensor 34 is 50mm, equal to the width of the data array on the Artcard 9. To satisfy Nyquist's sampling theorem, the resolution of the linear image sensor 34 must be at least twice the highest spatial frequency of the Artcard optical image reaching the image sensor. In practice, data detection is easier if the image sensor resolution is substantially above this. A resolution of 4800 dpi (189 dpmm) is chosen, giving a total of 9,450 pixels. This resolution requires a pixel sensor pitch of 5.3μm. This can readily be achieved by using four staggered rows of 20μm pixel sensors.

The linear image sensor is mounted in a special package which includes a LED 65 to illuminate the Artcard 9 via a light-pipe (not shown).

The Artcard reader light-pipe can be a molded light-pipe which has several function:

1. It diffuses the light from the LED over the width of the card using total internal reflection facets.
2. It focuses the light onto a 16μm wide strip of the Artcard 9 using an integrated cylindrical lens.
3. It focuses light reflected from the Artcard onto the linear image sensor pixels using a molded array of microlenses.

The operation of the Artcard reader is explained further hereinafter.

Artcard reader motor 37

The Artcard reader motor propels the Artcard past the linear image sensor 34 at a relatively constant rate. As it may not be cost effective to include extreme precision mechanical components in the Artcard reader, the motor 37 is a standard miniature motor geared down to an appropriate speed to drive a pair of rollers which move the Artcard 9. The speed variations, rumble, and other vibrations will affect the raw image data as circuitry within the APC 31 includes extensive compensation for these effects to reliably read the Artcard data.

The motor 37 is driven in reverse when the Artcard is to be ejected.

Artcard motor driver 61

The Artcard motor driver 61 is a small circuit which amplifies the digital motor control signals from the APC 31 to levels suitable for driving the motor 37.

Card Insertion sensor 49

The card insertion sensor 49 is an optical sensor which detects the presence of a card as it is being inserted in the card reader 34. Upon a signal from this sensor 49, the APC 31 initiates the card reading process, including the activation of the Artcard reader motor 37.

Card eject button 16

A card eject button 16 (Fig. 1) is used by the user to eject the current Artcard, so that another Artcard can be inserted. The APC 31 detects the pressing of the button, and reverses the Artcard reader motor 37 to eject the card.

Card status indicator 66

A card status indicator 66 is provided to signal the user as to the status of the Artcard reading process. This can be a standard bi-color (red/green) LED. When the card is successfully read, and data integrity has been verified, the LED lights up green continually. If the card is faulty, then the LED lights up red.

If the camera is powered from a 1.5 V instead of 3V battery, then the power supply voltage is less than the forward voltage drop of the greed LED, and the LED will not light. In this case, red LEDs can be used, or the LED can be powered from a voltage pump which also powers other circuits in the Artcam which require higher voltage.

64 Mbit DRAM 33

To perform the wide variety of image processing effects, the camera utilizes 8 Mbytes of memory 33. This can be provided by a single 64 Mbit memory chip. Of course, with changing memory technology increased Dram storage sizes may be substituted.

High speed access to the memory chip is required. This can be achieved by using a Rambus DRAM (burst access rate of 500 Mbytes per second) or chips using the new open standards such as double data rate (DDR) SDRAM or Synclink DRAM.

Camera authentication chip

The camera authentication chip 54 is identical to the print roll authentication chip 53, except that it has different information stored in it. The camera authentication chip 54 has three main purposes:

1. To provide a secure means of comparing authentication codes with the print roll authentication chip;
2. To provide storage for manufacturing information, such as the serial number of the camera;
3. To provide a small amount of non-volatile memory for storage of user information.

Displays

The Artcam includes an optional color display 5 and small status display 15. Lowest cost consumer cameras may include a color image display, such as a small TFT LCD 5 similar to those found on some digital cameras and camcorders. The color display 5 is a major cost element of these versions of Artcam, and the display 5 plus back light are a major power consumption drain.

Status display 15

The status display 15 is a small passive segment based LCD, similar to those currently provided on silver halide and digital cameras. Its main function is to show the number of prints remaining in the print roll 42 and icons for various standard camera features, such as flash and battery status.

Color display 5

The color display 5 is a full motion image display which operates as a viewfinder, as a verification of the image to be printed, and as a user interface display. The cost of the display 5 is approximately proportional to its area, so large displays (say 4" diagonal) unit will be restricted to expensive versions of the Artcam unit. Smaller displays, such as color camcorder viewfinder TFT's at around 1", may be effective for mid-range Artcams.

Zoom lens (not shown)

The Artcam can include a zoom lens. This can be a standard electronically controlled zoom lens, identical to one which would be used on a standard electronic camera, and similar to pocket camera zoom lenses. A referred version of the Artcam unit may include standard interchangeable 35mm SLR lenses.

Autofocus motor 39

The autofocus motor 39 changes the focus of the zoom lens. The motor is a miniature motor geared down to an appropriate speed to drive the autofocus mechanism.

Autofocus motor driver 63

The autofocus motor driver 63 is a small circuit which amplifies the digital motor control signals from the APC 31 to levels suitable for driving the motor 39.

Zoom motor 38

The zoom motor 38 moves the zoom front lenses in and out. The motor is a miniature motor geared down to an appropriate speed to drive the zoom mechanism.

Zoom motor driver 62

The zoom motor driver 62 is a small circuit which amplifies the digital motor control signals from the APC 31 to levels suitable for driving the motor.

Communications

The ACP 31 contains a universal serial bus (USB) interface 52 for communication with personal computers. Not all Artcam models are intended to include the USB connector. However, the silicon area required for a USB circuit 52 is small, so the interface can be included in the standard ACP.

Optional Keyboard 57

The Artcam unit may include an optional miniature keyboard 57 for customizing text specified by the Artcard. Any text appearing in an Artcard image may be editable, even if it is in a complex metallic 3D font. The miniature keyboard includes a single line alphanumeric LCD to display the original text and edited text. The keyboard may be a standard accessory.

The ACP 31 contains a serial communications circuit for transferring data to and from the miniature

keyboard.

Power Supply

The Artcam unit uses a battery 48. Depending upon the Artcam options, this is either a 3V Lithium cell, 1.5 V AA alkaline cells, or other battery arrangement.

Power Management Unit 51

Power consumption is an important design constraint in the Artcam. It is desirable that either standard camera batteries (such as 3V lithium batters) or standard AA or AAA alkaline cells can be used. While the electronic complexity of the Artcam unit is dramatically higher than 35mm photographic cameras, the power consumption need not be commensurately higher. Power in the Artcam can be carefully managed with all unit being turned off when not in use.

The most significant current drains are the ACP 31, the area image sensors 2,4, the printer 44 various motors, the flash unit 56, and the optional color display 5 dealing with each part separately:

1. ACP: If fabricated using 0.25µm CMOS, and running on 1.5V, the ACP power consumption can be quite low. Clocks to various parts of the ACP chip can be quite low. Clocks to various parts of the ACP chip can be turned off when not in use, virtually eliminating standby current consumption. The ACP will only fully used for approximately 4 seconds for each photograph printed.

2. Area image sensor: power is only supplied to the area image sensor when the user has their finger on the button.

3. The printer power is only supplied to the printer when actually printing. This is for around 2 seconds for each photograph. Even so, suitably lower power consumption printing should be used.

4. The motors required in the Artcam are all low power miniature motors, and are typically only activated for a few seconds per photo.

5. The flash unit 45 is only used for some photographs. Its power consumption can readily be provided by a 3V lithium battery for a reasonably battery life.

6. The optional color display 5 is a major current drain for two reasons: it must be on for the whole time that the camera is in use, and a backlight will be required if a liquid crystal display is used. Cameras which incorporate a color display will require a larger battery to achieve acceptable batter life.

Flash unit 56

The flash unit 56 can be a standard miniature electronic flash for consumer cameras.

Overview of the ACP 31

Fig. 3 illustrates the Artcam Central Processor (ACP) 31 in more detail. The Artcam Central Processor provides all of the processing power for Artcam. It is designed for a 0.25 micron CMOS process, with approximately 1.5 million transistors and an area of around 50 mm^2. The ACP 31 is a complex design, but design effort can be reduced by the use of datapath compilation techniques, macrocells, and IP cores. The ACP 31 contains:

A RISC CPU core 72

A 4 way parallel VLIW Vector Processor 74

A Direct RAMbus interface 81

A CMOS image sensor interface 83

A CMOS linear image sensor interface 88

A USB serial interface 52

An infrared keyboard interface 55

A numeric LCD interface 84, and

A color TFT LCD interface 88

A 4Mbyte Flash memory 70 for program storage 70

The RISC CPU, Direct RAMbus interface 81, CMOS sensor interface 83 and USB serial interface 52 can be vendor supplied cores. The ACP 31 is intended to run at a clock speed of 200 MHz on 3V externally and 1.5V internally to minimize power consumption. The CPU core needs only to run at 100 MHz. The following two block diagrams give two views of the ACP 31:

A view of the ACP 31 in isolation

An example Artcam showing a high-level view of the ACP 31 connected to the rest of the Artcam hardware.

Image Access

As stated previously, the DRAM Interface 81 is responsible for interfacing between other client portions of the ACP chip and the RAMBUS DRAM. In effect, each module within the DRAM Interface is an address generator.

There are three logical types of images manipulated by the ACP. They are:

-CCD Image, which is the Input Image captured from the CCD.

-Internal Image format – the Image format utilised internally by the Artcam device.

Print Image - the Output Image format printed by the Artcam

These images are typically different in color space, resolution, and the output & input color spaces which can vary from camera to camera. For example, a CCD image on a low-end camera may be a different resolution, or have different color characteristics from that used in a high-end camera. However all internal image formats are the same format in terms of color space across all cameras.

In addition, the three image types can vary with respect to which direction is 'up'. The physical orientation of the camera causes the notion of a portrait or landscape image, and this must be maintained throughout processing. For this reason, the internal image is always oriented correctly, and rotation is performed on images obtained from the CCD and during the print operation.

CPU Core (CPU) 72

The ACP 31 incorporates a 32 bit RISC CPU 72 to run the Vark image processing language interpreter and to perform Artcam's general operating system duties. A wide variety of CPU cores are suitable: it can be any processor core with sufficient processing power to perform the required core calculations and control functions fast enough to met consumer expectations. Examples of suitable cores are: MIPS R4000 core from LSI Logic, StrongARM core. There is no need to maintain instruction set continuity between different Artcam models. Artcard compatibility is maintained irrespective of future processor advances and changes, because the Vark interpreter is simply re-compiled for each new instruction set. The ACP 31 architecture is therefore also free to evolve. Different ACP 31 chip designs may be fabricated by different manufacturers, without requiring to license or port the CPU core. This device independence avoids the chip vendor lock-in such as has occurred in the PC market with Intel. The CPU operates at 100 MHz, with a single cycle time of 10ns. It must be fast enough to run the Vark interpreter, although the VLIW Vector Processor 74

is responsible for most of the time-critical operations.

Program cache 72

Although the program code is stored in on-chip Flash memory 70, it is unlikely that well packed Flash memory 70 will be able to operate at the 10ns cycle time required by the CPU. Consequently a small cache is required for good performance. 16 cache lines of 32 bytes each are sufficient, for a total of 512 bytes. The program cache 72 is defined in the chapter entitled **Program cache 72**.

Data cache 76

A small data cache 76 is required for good performance. This requirement is mostly due to the use of a RAMbus DRAM, which can provide high-speed data in bursts, but is inefficient for single byte accesses. The CPU has access to a memory caching system that allows flexible manipulation of CPU data cache 76 sizes. A minimum of 16 cache lines (512 bytes) is recommended for good performance.

CPU Memory Model

An Artcam's CPU memory model consists of a 32MB area. It consists of 8MB of physical RDRAM off-chip in the base model of Artcam, with provision for up to 16MB of off-chip memory. There is a 4MB Flash memory 70 on the ACP 31 for program storage, and finally a 4MB address space mapped to the various registers and controls of the ACP 31. The memory map then, for an Artcam is as follows:

Contents	**Size**
Base Artcam DRAM	8 MB
Extended DRAM	8 MB
Program memory (on ACP 31 in Flash memory 70)	4 MB
Reserved for extension of program memory	4 MB
ACP 31 registers and memory-mapped I/O	4 MB
Reserved	4 MB
TOTAL	32 MB

A straightforward way of decoding addresses is to use address bits 23-24:

If bit 24 is clear, the address is in the lower 16-MB range, and hence can be satisfied from DRAM and the Data cache 76. In most cases the DRAM will only be 8 MB, but 16 MB is allocated to cater for a higher memory model Artcams.

If bit 24 is set, and bit 23 is clear, then the address represents the Flash memory 70 4Mbyte range and is satisfied by the Program cache 72.

If bit 24 = 1 and bit 23 = 1, the address is translated into an access over the low speed bus to the requested component in the AC by the CPU Memory Decoder 68.

Flash memory 70

The ACP 31 contains a 4Mbyte Flash memory 70 for storing the Artcam program. It is envisaged that Flash memory 70 will have denser packing coefficients than masked ROM, and allows for greater flexibility for testing camera

program code. The downside of the Flash memory 70 is the access time, which is unlikely to be fast enough for the 100 MHz operating speed (10ns cycle time) of the CPU. A fast Program Instruction cache 77 therefore acts as the interface between the CPU and the slower Flash memory 70.

Program cache 72

A small cache is required for good CPU performance. This requirement is due to the slow speed Flash memory 70 which stores the Program code. 16 cache lines of 32 bytes each are sufficient, for a total of 512 bytes. The Program cache 72 is a read only cache. The data used by CPU programs comes through the CPU Memory Decoder 68 and if the address is in DRAM, through the general Data cache 76. The separation allows the CPU to operate independently of the VLIW Vector Processor 74. If the data requirements are low for a given process, it can consequently operate completely out of cache.

Finally, the Program cache 72 can be read as data by the CPU rather than purely as program instructions. This allows tables, microcode for the VLIW etc to be loaded from the Flash memory 70. Addresses with bit 24 set and bit 23 clear are satisfied from the Program cache 72.

CPU Memory Decoder 68

The CPU Memory Decoder 68 is a simple decoder for satisfying CPU data accesses. The Decoder translates data addresses into internal ACP register accesses over the internal low speed bus, and therefore allows for memory mapped I/O of ACP registers. The CPU Memory Decoder 68 only interprets addresses that have bit 24 set and bit 23 clear. There is no caching in the CPU Memory Decoder 68.

DRAM interface 81

The DRAM used by the Artcam is a single channel 64Mbit (8MB) RAMbus RDRAM operating at 1.6GB/sec. RDRAM accesses are by a single channel (16-bit data path) controller. The RDRAM also has several useful operating modes for low power operation. Although the Rambus specification describes a system with random 32 byte transfers as capable of achieving a greater than 95% efficiency, this is not true if only part of the 32 bytes are used. Two reads followed by two writes to the same device yields over 86% efficiency. The primary latency is required for bus turn-around going from a Write to a Read, and since there is a Delayed Write mechanism, efficiency can be further improved. With regards to writes, Write Masks allow specific subsets of bytes to be written to. These write masks would be set via internal cache "dirty bits". The upshot of the Rambus Direct RDRAM is a throughput of >1GB/sec is easily achievable, and with multiple reads for every write (most processes) combined with intelligent algorithms making good use of 32 byte transfer knowledge, **transfer rates of >1.3 GB/sec** are expected. Every 10ns, 16 bytes can be transferred to or from the core.

DRAM Organization

The DRAM organization for a base model (8MB RDRAM) Artcam is as follows:

Contents	Size
Program scratch RAM	0.50 MB
Artcard data	1.00 MB
Photo Image, captured from CMOS Sensor	0.50 MB
Print Image (compressed)	2.25 MB
1 Channel of expanded Photo Image	1.50 MB
1 Image Pyramid of single channel	1.00 MB
Intermediate Image Processing	1.25 MB
TOTAL	8 MB

Notes:

Uncompressed, the Print Image requires 4.5MB (1.5MB per channel). To accommodate other objects in the 8MB model, the Print Image needs to be compressed. If the chrominance channels are compressed by 4:1 they require only 0.375MB each).

The memory model described here assumes a single 8 MB RDRAM. Other models of the Artcam may have more memory, and thus not require compression of the Print Image. In addition, with more memory a larger part of the final image can be worked on at once, potentially giving a speed improvement.

Note that ejecting or inserting an Artcard invalidates the 5.5MB area holding the Print Image, 1 channel of expanded photo image, and the image pyramid. This space may be safely used by the Artcard Interface for decoding the Artcard data.

Data cache 76

The ACP 31 contains a dedicated CPU instruction cache 77 and a general data cache 76. The Data cache 76 handles all DRAM requests (reads and writes of data) from the CPU, the VLIW Vector Processor 74, and the Display Controller 88. These requests may have very different profiles in terms of memory usage and algorithmic timing requirements. For example, a VLIW process may be processing an image in linear memory, and lookup a value in a table for each value in the image. There is little need to cache much of the image, but it may be desirable to cache the entire lookup table so that no real memory access is required. Because of these differing requirements, the Data cache 76 allows for an intelligent definition of caching.

Although the Rambus DRAM interface 81 is capable of very high-speed memory access (an average throughput of 32 bytes in 25ns), it is not efficient dealing with single byte requests. In order to reduce effective memory latency, the ACP 31 contains 128 cache lines. Each cache line is 32 bytes wide. Thus the total amount of data cache 76 is 4096 bytes (4KB). The 128 cache lines are configured into 16 programmable-sized groups. Each of the 16 groups must be a contiguous set of cache lines. The CPU is responsible for determining how many cache lines to allocate to each group. Within each group cache lines are filled according to a simple Least Recently Used algorithm. In terms of CPU data requests, the Data cache 76 handles memory access requests that have address bit 24 clear. If bit 24 is clear, the address

is in the lower 16 MB range, and hence can be satisfied from DRAM and the Data cache 76. In most cases the DRAM will only be 8 MB, but 16 MB is allocated to cater for a higher memory model Artcam. If bit 24 is set, the address is ignored by the Data cache 76.

All CPU data requests are satisfied from Cache Group 0. A minimum of 16 cache lines is recommended for good CPU performance, although the CPU can assign any number of cache lines (except none) to Cache Group 0. The remaining Cache Groups (1 to 15) are allocated according to the current requirements. This could mean allocation to a VLIW Vector Processor 74 program or the Display Controller 88. For example, a 256 byte lookup table required to be permanently available would require 8 cache lines. Writing out a sequential image would only require 2-4 cache lines (depending on the size of record being generated and whether write requests are being Write Delayed for a significant number of cycles). Associated with each cache line byte is a dirty bit, used for creating a Write Mask when writing memory to DRAM. Associated with each cache line is another dirty bit, which indicates whether any of the cache line bytes has been written to (and therefore the cache line must be written back to DRAM before it can be reused). Note that it is possible for two different Cache Groups to be accessing the same address in memory and to get out of sync. The VLIW program writer is responsible to ensure that this is not an issue. It could be perfectly reasonable, for example, to have a Cache Group responsible for reading an image, and another Cache Group responsible for writing the changed image back to memory again. If the images are read or written sequentially there may be advantages in allocating cache lines in this manner. A total of 8 buses 182 connect the VLIW Vector Processor 74 to the Data cache 76. Each bus is connected to an I/O Address Generator. (There are 2 I/O Address Generators 189, 190 per Processing Unit 178, and there are 4 Processing Units in the VLIW Vector Processor 74. The total number of buses is therefore 8.) In any given cycle, in addition to a single 32 bit (4 byte) access to the CPU's cache group (Group 0), 4 simultaneous accesses of 16 bits (2 bytes) to remaining cache groups are permitted on the 8 VLIW Vector Processor 74 buses. The Data cache 76 is responsible for fairly processing the requests. On a given cycle, no more than 1 request to a specific Cache Group will be processed. Given that there are 8 Address Generators 189, 190 in the VLIW Vector Processor 74, each one of these has the potential to refer to an individual Cache Group. However it is possible and occasionally reasonable for 2 or more Address Generators 189, 190 to access the same Cache Group. The CPU is responsible for ensuring that the Cache Groups have been allocated the correct number of cache lines, and that the various Address Generators 189, 190 in the VLIW Vector Processor 74 reference the specific Cache Groups correctly.

The Data cache 76 as described allows for the Display Controller 88 and VLIW Vector Processor 74 to be active simultaneously. If the operation of these two components were deemed to never occur simultaneously, a total 9 Cache Groups would suffice. The CPU would use Cache Group 0, and the VLIW Vector Processor 74 and the Display Controller 88 would share the remaining 8 Cache Groups, requiring only 3 bits (rather than 4) to define which Cache Group would satisfy a particular request.

JTAG Interface 85

A standard JTAG (Joint Test Action Group) Interface is included in the ACP 31 for testing purposes. Due to the complexity of the chip, a variety of testing techniques are required, including BIST (Built In Self Test) and functional block isolation. An overhead of 10% in chip area is assumed for overall chip testing circuitry. The test circuitry is beyond the scope of this document.

Serial Interfaces

USB serial port interface 52

This is a standard USB serial port, which is connected to the internal chip low speed bus, thereby allowing the CPU to control it.

Keyboard interface 65

This is a standard low-speed serial port, which is connected to the internal chip low speed bus, thereby allowing the CPU to control it. It is designed to be optionally connected to a keyboard to allow simple data input to customize prints.

Authentication chip serial interfaces 64

These are 2 standard low-speed serial ports, which are connected to the internal chip low speed bus, thereby allowing the CPU to control them. The reason for having 2 ports is to connect to both the on-camera Authentication chip, and to the print-roll Authentication chip using separate lines. Only using 1 line may make it possible for a clone print-roll manufacturer to design a chip which, instead of generating an authentication code, tricks the camera into using the code generated by the authentication chip in the camera.

Parallel Interface 67

The parallel interface connects the ACP 31 to individual static electrical signals. The CPU is able to control each of these connections as memory-mapped I/O via the low speed bus The following table is a list of connections to the parallel interface:

Connection	Direction	Pins
Paper transport stepper motor	Out	4
Artcard stepper motor	Out	4
Zoom stepper motor	Out	4
Guillotine motor	Out	1
Flash trigger	Out	1
Status LCD segment drivers	Out	7
Status LCD common drivers	Out	4
Artcard illumination LED	Out	1
Artcard status LED (red/green)	In	2
Artcard sensor	In	1
Paper pull sensor	In	1
Orientation sensor	In	2
Buttons	In	4
	TOTAL	36

VLIW Input and Output FIFOs 78, 79

The VLIW Input and Output FIFOs are 8 bit wide FIFOs used for communicating between processes and the VLIW Vector Processor 74. Both FIFOs are under the control of the VLIW Vector Processor 74, but can be cleared and queried (e.g. for status) etc by the CPU.

VLIW Input FIFO 78

A client writes 8-bit data to the VLIW Input FIFO 78 in order to have the data processed by the VLIW Vector Processor 74. Clients include the Image Sensor Interface, Artcard Interface, and CPU. Each of these processes is able to offload processing by simply writing the data to the FIFO, and letting the VLIW Vector Processor 74 do all the hard work. An example of the use of a client's use of the VLIW Input FIFO 78 is the Image Sensor Interface (ISI 83). The ISI 83 takes data from the Image Sensor and writes it to the FIFO. A VLIW process takes it from the FIFO, transforming it into the correct image data format, and writing it out to DRAM. The ISI 83 becomes much simpler as a result.

VLIW Output FIFO 79

The VLIW Vector Processor 74 writes 8-bit data to the VLIW Output FIFO 79 where clients can read it. Clients include the Print Head Interface and the CPU. Both of these clients is able to offload processing by simply reading the already processed data from the FIFO, and letting the VLIW Vector Processor 74 do all the hard work. The CPU can also be interrupted whenever data is placed into the VLIW Output FIFO 79, allowing it to only process the data as it becomes available rather than polling the FIFO continuously. An example of the use of a client's use of the VLIW Output FIFO 79 is the Print Head Interface (PHI 62). A VLIW process takes an image, rotates it to the correct orientation, color converts it, and dithers the resulting image according to the print head requirements. The PHI 62 reads the dithered formatted 8-bit data from the VLIW Output FIFO 79 and simply passes it on to the Print Head external to the ACP 31. The PHI 62 becomes much simpler as a result.

VLIW Vector Processor 74

To achieve the high processing requirements of Artcam, the ACP 31 contains a VLIW (Very Long Instruction Word) Vector Processor. The VLIW processor is a set of 4 identical Processing Units (PU e.g 178) working in parallel, connected by a crossbar switch 183. Each PU e.g 178 can perform four 8-bit multiplications, eight 8-bit additions, three 32-bit additions, I/O processing, and various logical operations in each cycle. The PUs e.g 178 are microcoded, and each has two Address Generators 189, 190 to allow full use of available cycles for data processing. The four PUs e.g 178 are normally synchronized to provide a tightly interacting VLIW processor. Clocking at 200 MHz, the VLIW Vector Processor 74 runs at 12 Gops (12 billion operations per second). Instructions are tuned for image processing functions such as warping, artistic brushing, complex synthetic illumination, color transforms, image filtering, and compositing. These are accelerated by two orders of magnitude over desktop computers.

As shown in more detail in Fig. 3(a), the VLIW Vector Processor 74 is 4 PUs e.g 178 connected by a crossbar switch 183 such that each PU e.g 178 provides two inputs to, and takes two outputs from, the crossbar switch 183. Two common registers form a control and synchronization mechanism for the PUs e.g 178. 8 Cache buses 182 allow connectivity to DRAM via the Data cache 76, with 2 buses going to each PU e.g 178 (1 bus per I/O Address Generator).

Each PU e.g 178 consists of an ALU 188 (containing a number of registers & some arithmetic logic for processing data), some microcode RAM 196, and connections to the outside world (including other ALUs). A local PU state machine runs in microcode and is the means by which the PU e.g 178 is controlled. Each PU e.g 178 contains two I/O Address Generators 189, 190 controlling data flow between DRAM (via the Data cache 76) and the ALU 188 (via Input FIFO and Output FIFO). The address generator is able to read and write data (specifically images in a variety of formats) as well as tables and simulated FIFOs in DRAM. The formats are customizable under software control, but are not microcoded. Data taken from the Data cache 76 is transferred to the ALU 188 via the 16-bit wide Input FIFO. Output data is written to the 16-bit wide Output FIFO and from there to the Data cache 76. Finally, all PUs e.g 178 share a single 8-bit wide VLIW Input FIFO 78 and a single 8-bit wide VLIW Output FIFO 79. The low speed data bus connection allows the CPU to read and write registers in the PU e.g 178, update microcode, as well as the common registers shared by all PUs e.g 178 in the VLIW Vector Processor 74. Turning now to Fig. 4, a closer detail of the internals of a single PU e.g 178 can be seen, with components and control signals detailed in subsequent hereinafter:

Microcode

Each PU e.g 178 contains a microcode RAM 196 to hold the program for that particular PU e.g 178. Rather than have the microcode in ROM, the microcode is in RAM, with the CPU responsible for loading it up. For the same space on chip, this tradeoff reduces the maximum size of any one function to the size of the RAM, but allows an unlimited number of functions to be written in microcode. Functions implemented using microcode include Vark acceleration, Artcard reading, and Printing. The VLIW Vector Processor 74 scheme has several advantages for the case of the ACP 31:

Hardware design complexity is reduced

Hardware risk is reduced due to reduction in complexity

Hardware design time does not depend on all Vark functionality being implemented in dedicated silicon

Space on chip is reduced overall (due to large number of processes able to be implemented as microcode)

Functionality can be added to Vark (via microcode) with no impact on hardware design time

Size and Content

The CPU loaded microcode RAM 196 for controlling each PU e.g 178 is 128 words, with each word being 96 bits wide. A summary of the microcode size for control of various units of the PU e.g 178 is listed in the following table:

Process Block	Size (bits)
Status Output	3
Branching (microcode control)	11
In	8
Out	6
Registers	7
Read	10
Write	6
Barrel Shifter	12
Adder/Logical	14
Multiply/Interpolate	19
TOTAL	96

With 128 instruction words, the total microcode RAM 196 per PU e.g 178 is 12,288 bits, or 1.5KB exactly. Since the VLIW Vector Processor 74 consists of 4 identical PUs e.g 178 this equates to 6,144 bytes, exactly 6KB. Some of the bits in a microcode word are directly used as control bits, while others are decoded. See the various unit descriptions that detail the interpretation of each of the bits of the microcode word.

Synchronization Between PUs e.g 178

Each PU e.g 178 contains a 4 bit Synchronization Register 197. It is a mask used to determine which PUs e.g 178 work together, and has one bit set for each of the corresponding PUs e.g 178 that are functioning as a single process. For example, if all of the PUs e.g 178 were functioning as a single process, each of the 4 Synchronization Register 197s would have all 4 bits set. If there were two asynchronous processes of 2 PUs e.g 178 each, two of the PUs e.g 178 would have 2 bits set in their Synchronization Register 197s (corresponding to themselves), and the other two would have the other 2 bits set in their Synchronization Register 197s (corresponding to themselves).

The Synchronization Register 197 is used in two basic ways:

Stopping and starting a given process in synchrony

Suspending execution within a process

Stopping and Starting Processes

The CPU is responsible for loading the microcode RAM 196 and loading the execution address for the first instruction (usually 0). When the CPU starts executing microcode, it begins at the specified address.

Execution of microcode only occurs when **all** the bits of the Synchronization Register 197 are **also** set in the Common Synchronization Register 197. The CPU therefore sets up all the PUs e.g 178 and then starts or stops processes with a single write to the Common Synchronization Register 197.

This synchronization scheme allows multiple processes to be running asynchronously on the PUs e.g 178, being

stopped and started as processes rather than one PU e.g 178 at a time.

Suspending Execution within a Process

In a given cycle, a PU e.g 178 may need to read from or write to a FIFO (based on the opcode of the current microcode instruction). If the FIFO is empty on a read request, or full on a write request, the FIFO request cannot be completed. The PU e.g 178 will therefore assert its SuspendProcess control signal 198. The SuspendProcess signals from all PUs e.g 178 are fed back to all the PUs e.g 178. The Synchronization Register 197 is ANDed with the 4 SuspendProcess bits, and if the result is non-zero, none of the PU e.g 178's register WriteEnables or FIFO strobes will be set. Consequently none of the PUs e.g 178 that form the same process group as the PU e.g 178 that was unable to complete its task will have their registers or FIFOs updated during that cycle. This simple technique keeps a given process group in synchronization. Each subsequent cycle the PU e.g 178's state machine will attempt to re-execute the microcode instruction at the same address, and will continue to do so until successful. Of course the Common Synchronization Register 197 can be written to by the CPU to stop the entire process if necessary. This synchronization scheme allows any combinations of PUs e.g 178 to work together, each group only affecting its co-workers with regards to suspension due to data not being ready for reading or writing.

Control and Branching

During each cycle, each of the four basic input and calculation units within a PU e.g 178's ALU 188 (Read, Adder/Logic, Multiply/Interpolate, and Barrel Shifter) produces two status bits: a Zero flag and a Negative flag indicating whether the result of the operation during that cycle was 0 or negative. Each cycle one of those 4 status bits is chosen by microcode instructions to be output from the PU e.g 178. The 4 status bits (1 per PU e.g 178's ALU 188) are combined into a 4 bit Common Status Register 200. During the next cycle, each PU e.g 178's microcode program can select one of the bits from the Common Status Register 200, and branch to another microcode address dependant on the value of the status bit.

Status bit

Each PU e.g 178's ALU 188 contains a number of input and calculation units. Each unit produces 2 status bits – a negative flag and a zero flag. One of these status bits is output from the PU e.g 178 when a particular unit asserts the value on the 1-bit tri-state status bit bus. The single status bit is output from the PU e.g 178, and then combined with the other PU e.g 178 status bits to update the Common Status Register 200. The microcode for determining the output status bit takes the following form:

# Bits	Description
2	Select unit whose status bit is to be output 00 = Adder unit 01 = Multiply/Logic unit 10 = Barrel Shift unit 11 = Reader unit
1	0 = Zero flag 1 = Negative flag
3	TOTAL

Within the ALU 188, the 2-bit Select Processor Block value is decoded into four 1-bit enable bits, with a different enable bit sent to each processor unit block. The status select bit (choosing Zero or Negative) is passed into all units to determine which bit is to be output onto the status bit bus.

Branching Within Microcode

Each PU e.g 178 contains a 7 bit Program Counter (PC) that holds the current microcode address being executed. Normal program execution is linear, moving from address N in one cycle to address N+1 in the next cycle. Every cycle however, a microcode program has the ability to branch to a different location, or to test a status bit from the Common Status Register 200 and branch. The microcode for determining the next execution address takes the following form:

# Bits	Description
2	00 = NOP (PC = PC+1) 01 = Branch always 10 = Branch if status bit clear 11 = Branch if status bit set
2	Select status bit from status word
7	Address to branch to (absolute address, 00-7F)
11	TOTAL

ALU 188

Fig. 5 illustrates the ALU 188 in more detail. Inside the ALU 188 are a number of specialized processing blocks, controlled by a microcode program. The specialized processing blocks include:

Read Block 202, for accepting data from the input FIFOs

Write Block 203, for sending data out via the output FIFOs

Adder/Logical block 204, for addition & subtraction, comparisons and logical operations

Multiply/Interpolate block 205, for multiple types of interpolations and multiply/accumulates

Barrel Shift block 206, for shifting data as required

In block 207, for accepting data from the external crossbar switch 183

Out block 208, for sending data to the external crossbar switch 183

Registers block 215, for holding data in temporary storage

Four specialized 32 bit registers hold the results of the 4 main processing blocks:

M register 209 holds the result of the Multiply/Interpolate block

L register 209 holds the result of the Adder/Logic block

S register 209 holds the result of the Barrel Shifter block

R register 209 holds the result of the Read Block 202

In addition there are two internal crossbar switches 213m 214 for data transport. The various process blocks are further expanded in the following sections, together with the microcode definitions that pertain to each block. Note that the microcode is decoded within a block to provide the control signals to the various units within.

Data Transfers Between PUs e.g 178

Each PU e.g 178 is able to exchange data via the external crossbar. A PU e.g 178 takes two inputs and outputs two values to the external crossbar. In this way two operands for processing can be obtained in a single cycle, but cannot be actually used in an operation until the following cycle.

In 207

This block is illustrated in Fig. 6 and contains two registers, In_1 and In_2 that accept data from the external crossbar. The registers can be loaded each cycle, or can remain unchanged. The selection bits for choosing from among the 8 inputs are output to the external crossbar switch 183. The microcode takes the following form:

# Bits	Description
1	0 = NOP 1 = Load In_1 from crossbar
3	Select Input 1 from external crossbar
1	0 = NOP 1 = Load In_2 from crossbar
3	Select Input 2 from external crossbar
8	TOTAL

Out 208

Complementing In is Out 208. The Out block is illustrated in more detail in Fig. 7. Out contains two registers, Out_1 and Out_2, both of which are output to the external crossbar each cycle for use by other PUs e.g 178. The Write unit is also able to write one of Out_1 or Out_2 to one of the output FIFOs attached to the ALU 188. Finally, both registers are available as inputs to Crossbar1 213, which therefore makes the register values available as inputs to other units within the ALU 188. Each cycle either of the two registers can be updated according to microcode selection. The data loaded into the specified register can be one of $D_0 - D_3$ (selected from Crossbar1 213) one of M, L, S, and R (selected from Crossbar2 214), one of 2 programmable constants, or the fixed values 0 or 1. The microcode for Out takes the

following form:

# Bits	Description
1	0 = NOP 1 = Load Register
1	Select Register to load [Out_1 or Out_2]
4	Select input [In_1,In_2,Out_1,Out_2,D_0,D_1,D_2,D_3,M,L,S,R,K_1,K_2,0,1]
6	TOTAL

Local Registers and Data Transfers within ALU 188

As noted previously, the ALU 188 contains four specialized 32-bit registers to hold the results of the 4 main processing blocks:

M register 209 holds the result of the Multiply/Interpolate block

L register 209 holds the result of the Adder/Logic block

S register 209 holds the result of the Barrel Shifter block

R register 209 holds the result of the Read Block 202

The CPU has direct access to these registers, and other units can select them as inputs via Crossbar2 214. Sometimes it is necessary to delay an operation for one or more cycles. The **Registers** block contains four 32-bit registers $D_0 - D_3$ to hold temporary variables during processing. Each cycle one of the registers can be updated, while all the registers are output for other units to use via Crossbar1 213 (which also includes In_1, In_2, Out_1 and Out_2). The CPU has direct access to these registers. The data loaded into the specified register can be one of $D_0 - D_3$ (selected from Crossbar1 213) one of M, L, S, and R (selected from Crossbar2 214), one of 2 programmable constants, or the fixed values 0 or 1. The Registers block 215 is illustrated in more detail in Fig. 8. The microcode for Registers takes the following form:

# Bits	Description
1	0 = NOP 1 = Load Register
2	Select Register to load [$D_0 - D_3$]
4	Select input [In_1,In_2,Out_1,Out_2,D_0,D_1,D_2,D_3,M,L,S,R,K_1,K_2,0,1]
7	TOTAL

Crossbar1 213

Crossbar1 213 is illustrated in more detail in Fig. 9. Crossbar1 213 is used to select from inputs In_1, In_2, Out_1, Out_2, D_0-D_3. 7 outputs are generated from Crossbar1 213: 3 to the Multiply/Interpolate Unit, 2 to the Adder Unit, 1 to the Registers unit and 1 to the Out unit. The control signals for Crossbar1 213 come from the various units that use the Crossbar inputs. There is no specific microcode that is separate for Crossbar1 213.

Crossbar2 214

Crossbar2 214 is illustrated in more detail in Fig. 10.Crossbar2 214 is used to select from the general ALU 188

registers M, L, S and R. 6 outputs are generated from Crossbar1 213: 2 to the Multiply/Interpolate Unit, 2 to the Adder Unit, 1 to the Registers unit and 1 to the Out unit. The control signals for Crossbar2 214 come from the various units that use the Crossbar inputs. There is no specific microcode that is separate for Crossbar2 214.

Data Transfers Between PUs e.g 178 and DRAM or External Processes

Returning to Fig. 4, PUs e.g 178 share data with each other directly via the external crossbar. They also transfer data to and from external processes as well as DRAM. Each PU e.g 178 has 2 I/O Address Generators 189, 190 for transferring data to and from DRAM. A PU e.g 178 can send data to DRAM via an I/O Address Generator's Output FIFO e.g. 186, or accept data from DRAM via an I/O Address Generator's Input FIFO 187. These FIFOs are local to the PU e.g 178. There is also a mechanism for transferring data to and from external processes in the form of a common VLIW Input FIFO 78 and a common VLIW Output FIFO 79, shared between all ALUs. The VLIW Input and Output FIFOs are only 8 bits wide, and are used for printing, Artcard reading, transferring data to the CPU etc. The local Input and Output FIFOs are 16 bits wide.

Read

The Read process block 202 of Fig. 5 is responsible for updating the ALU 188's R register 209, which represents the external input data to a VLIW microcoded process. Each cycle the Read Unit is able to read from either the common VLIW Input FIFO 78 (8 bits) or one of two local Input FIFOs (16 bits). A 32-bit value is generated, and then all or part of that data is transferred to the R register 209. The process can be seen in Fig. 11. The microcode for Read is described in the following table. Note that the interpretations of some bit patterns are deliberately chosen to aid decoding.

# Bits	Description
2	00 = NOP 01 = Read from VLIW Input FIFO 78 10 = Read from Local FIFO 1 11 = Read from Local FIFO 2
1	How many significant bits 0 = 8 bits (pad with 0 or sign extend) 1 = 16 bits (only valid for Local FIFO reads)
1	0 = Treat data as unsigned (pad with 0) 1 = Treat data as signed (sign extend when reading from FIFO)r
2	How much to shift data left by: 00 = 0 bits (no change) 01 = 8 bits 10 = 16 bits 11 = 24 bits
4	Which bytes of R to update (hi to lo order byte) Each of the 4 bits represents 1 byte WriteEnable on R
10	TOTAL

Write

The Write process block is able to write to either the common VLIW Output FIFO 79 or one of the two local Output FIFOs each cycle. Note that since only 1 FIFO is written to in a given cycle, only one 16-bit value is output to all FIFOs, with the low 8 bits going to the VLIW Output FIFO 79. The microcode controls which of the FIFOs gates in the value. The process of data selection can be seen in more detail in Fig. 12. The source values Out_1 and Out_2 come from the Out block. They are simply two registers. The microcode for Write takes the following form:

# Bits	Description
2	00 = NOP 01 = Write VLIW Output FIFO 79 10 = Write local Output FIFO 1 11 = Write local Output FIFO 2
1	Select Output Value [Out_1 or Out_2]
3	Select part of Output Value to write (32 bits = 4 bytes ABCD) 000 = 0D 001 = 0D 010 = 0B 011 = 0A 100 = CD 101 = BC 110 = AB 111 = 0
6	TOTAL

Computational Blocks

Each ALU 188 has two computational process blocks, namely an Adder/Logic process block 204, and a Multiply/Interpolate process block 205. In addition there is a Barrel Shifter block to provide help to these computational blocks. Registers from the Registers block 215 can be used for temporary storage during pipelined operations.

Barrel Shifter

The Barrel Shifter process block 206 is shown in more detail in Fig. 13 and takes its input from the output of Adder/Logic or Multiply/Interpolate process blocks or the previous cycle's results from those blocks (ALU registers L and M). The 32 bits selected are barrel shifted an arbitrary number of bits in either direction (with sign extension as necessary), and output to the ALU 188's S register 209. The microcode for the Barrel Shift process block is described in the following table. Note that the interpretations of some bit patterns are deliberately chosen to aid decoding.

# Bits	Description
3	000 = NOP 001 = Shift Left (unsigned) 010 = Reserved 011 = Shift Left (signed) 100 = Shift right (unsigned, no rounding) 101 = Shift right (unsigned, with rounding) 110 = Shift right (signed, no rounding) 111 = Shift right (signed, with rounding)
2	Select Input to barrel shift: 00 = Multiply/Interpolate result 01 = M 10 = Adder/Logic result 11 = L
5	# bits to shift
1	Ceiling of 255
1	Floor of 0 (signed data)
12	TOTAL

Adder/Logic 204

The Adder/Logic process block is shown in more detail in Fig. 14 and is designed for simple 32-bit addition/subtraction, comparisons, and logical operations. In a single cycle a single addition, comparison, or logical operation can be performed, with the result stored in the ALU 188's L register 209. There are two primary operands, A and B, which are selected from either of the two crossbars or from the 4 constant registers. One crossbar selection allows the results of the previous cycle's arithmetic operation to be used while the second provides access to operands previously calculated by this or another ALU 188. The CPU is the only unit that has write access to the four constants (K_1-K_4). In cases where an operation such as (A+B) x 4 is desired, the direct output from the adder can be used as input to the Barrel Shifter, and can thus be shifted left 2 places without needing to be latched into the L register 209 first. The output from the adder can also be made available to the multiply unit for a multiply-accumulate operation. The microcode for the Adder/Logic process block is described in the following table. The interpretations of some bit patterns are deliberately chosen to aid decoding. Microcode bit interpretation for Adder/Logic unit

# Bits	Description
4	0000 = A+B (carry in = 0) 0001 = A+B (carry in = carry out of previous operation) 0010 = A+B+1 (carry in = 1) 0011 = A+1 (increments A) 0100 = A-B-1 (carry in = 0) 0101 = A-B (carry in = carry out of previous operation) 0110 = A-B (carry in = 1) 0111 = A–1 (decrements A) 1000 = NOP 1001 = ABS(A-B) 1010 = MIN(A, B) 1011 = MAX(A, B) 1100 = A AND B (both A & B can be inverted, see below) 1101 = A OR B (both A & B can be inverted, see below) 1110 = A XOR B (both A & B can be inverted, see below) 1111 = A (A can be inverted, see below)
1	If logical operation: 0 = A=A 1 = A=NOT(A) If Adder operation: 0 = A is unsigned 1 = A is signed
1	If logical operation: 0 = B=B 1 = B=NOT(B) If Adder operation 0 = B is unsigned

	1 = B is signed
4	Select A [In_1,In_2,Out_1,Out_2,D_0,D_1,D_2,D_3,M,L,S,R,K_1,K_2,K_3,K_4]
4	Select B [In_1,In_2,Out_1,Out_2,D_0,D_1,D_2,D_3,M,L,S,R,K_1,K_2,K_3,K_4]
14	TOTAL

Multiply/Interpolate 205

The Multiply/Interpolate process block is shown in more detail in Fig. 15 and is a set of four 8 x 8 interpolator units that are capable of performing four individual 8 x 8 interpolates per cycle, or can be combined to perform a single 16 x 16 multiply. This gives the possibility to perform up to 4 linear interpolations, a single bi-linear interpolation, or half of a tri-linear interpolation in a single cycle. The result of the interpolations or multiplication is stored in the ALU 188's M register 209. There are two primary operands, A and B, which are selected from any of the general registers in the ALU 188 or from four programmable constants internal to the Multiply/Interpolate process block. Each interpolator block functions as a simple 8 bit interpolator [result = A + (B-A)f] or as a simple 8 x 8 multiply [result = A * B]. When the operation is interpolation, A and B are treated as four 8 bit numbers A_0 thru A_3 (A_0 is the low order byte), and B_0 thru B_3. Agen, Bgen, and Fgen are responsible for ordering the inputs to the Interpolate units so that they match the operation being performed. For example, to perform bilinear interpolation, each of the 4 values must be multiplied by a different factor & the result summed, while a 16 x 16 bit multiplication requires the factors to be 0. The microcode for the Adder/Logic process block is described in the following table. Note that the interpretations of some bit patterns are deliberately chosen to aid decoding.

# Bits	Description
4	0000 = $(A_{10} * B_{10}) + V$ 0001 = $(A0 * B0) + (A1 * B1) + V$ 0010 = $(A_{10} * B_{10}) - V$ 0011 = $V - (A_{10} * B_{10})$ 0100 = Interpolate A_0,B_0 by f_0 0101 = Interpolate A_0,B_0 by f_0, A_1,B_1 by f_1 0110 = Interpolate A_0,B_0 by f_0, A_1,B_1 by f_1, A_2,B_2 by f_2 0111 = Interpolate A_0,B_0 by f_0, A_1,B_1 by f_1, A_2,B_2 by f_2, A_3,B_3 by f_3 1000 = Interpolate 16 bits stage 1 [$M = A_{10} * f_{10}$] 1001 = Interpolate 16 bits stage 2 [$M = M + (A_{10} * f_{10})$] 1010 = Tri-linear interpolate A by f stage 1 [$M=A_0f_0+A_1f_1+A_2f_2+A_3f_3$] 1011 = Tri-linear interpolate A by f stage 2 [$M=M+A_0f_0+A_1f_1+A_2f_2+A_3f_3$] 1100 = Bi-linear interpolate A by f stage 1 [$M=A_0f_0+A_1f_1$] 1101 = Bi-linear interpolate A by f stage 2 [$M=M+A_0f_0+A_1f_1$] 1110 = Bi-linear interpolate A by f complete [$M=A_0f_0+A_1f_1+A_2f_2+A_3f_3$] 1111 = NOP
4	Select A [$In_1,In_2,Out_1,Out_2,D_0,D_1,D_2,D_3,M,L,S,R,K_1,K_2,K_3,K_4$]
4	Select B [$In_1,In_2,Out_1,Out_2,D_0,D_1,D_2,D_3,M,L,S,R,K_1,K_2,K_3,K_4$]
If Mult:	
4	Select V [$In_1,In_2,Out_1,Out_2,D_0,D_1,D_2,D_3,K_1,K_2,K_3,K_4$,Adder result,M,0,1]
1	Treat A as signed
1	Treat B as signed
1	Treat V as signed
If Interp:	
4	Select basis for f [$In_1,In_2,Out_1,Out_2,D_0,D_1,D_2,D_3,K_1,K_2,K_3,K_4$,X,X,X,X]
1	Select interpolation f generation from P_1 or P_2 P_n is interpreted as # fractional bits in f If P_n=0, f is range 0..255 representing 0..1

2	Reserved
19	TOTAL

The same 4 bits are used for the selection of V and f, although the last 4 options for V don't generally make sense as f values. Interpolating with a factor of 1 or 0 is pointless, and the previous multiplication or current result is unlikely to be a meaningful value for f.

I/O Address GeneratorS 189, 190

The I/O Address Generators are shown in more detail in Fig. 16. A VLIW process does not access DRAM directly. Access is via 2 I/O Address Generators 189, 190, each with its own Input and Output FIFO. A PU e.g 178 reads data from one of two local Input FIFOs, and writes data to one of two local Output FIFOs. Each I/O Address Generator is responsible for reading data from DRAM and placing it into its Input FIFO, where it can be read by the PU e.g 178, and is responsible for taking the data from its Output FIFO (placed there by the PU e.g 178) and writing it to DRAM. The I/O Address Generator is a state machine responsible for generating addresses and control for data retrieval and storage in DRAM via the Data cache 76. It is customizable under CPU software control, but cannot be microcoded. The address generator produces addresses in two broad categories:

Image Iterators, used to iterate (reading, writing or both) through pixels of an image in a variety of ways

Table I/O, used to randomly access pixels in images, data in tables, and to simulate FIFOs in DRAM

Each of the I/O Address Generators 189, 190 has its own bus connection to the Data cache 76, making 2 bus connections per PU e.g 178, and a total of 8 buses over the entire VLIW Vector Processor 74. The Data cache 76 is able to service 4 of the maximum 8 requests from the 4 PUs e.g 178 each cycle. The Input and Output FIFOs are 8 entry deep 16-bit wide FIFOs. The various types of address generation (Image Iterators and Table I/O) are described in the subsequent sections.

Registers

The I/O Address Generator has a set of registers for that are used to control address generation. The addressing mode also determines how the data is formatted and sent into the local Input FIFO, and how data is interpreted from the local Output FIFO. The CPU is able to access the registers of the I/O Address Generator via the low speed bus. The first set of registers define the housekeeping parameters for the I/O Generator:

Register Name	# bits	Description
Reset	0	A write to this register halts any operations, and writes 0s to all the data registers of the I/O Generator. The input and output FIFOs are not cleared.
Go	0	A write to this register restarts the counters according to the current setup. For example, if the I/O Generator is a Read Iterator, and the Iterator is currently halfway through the image, a write to Go will cause the reading to begin at the start of the image again. While the I/O Generator is performing, the Active bit of the Status register will be set.
Halt	0	A write to this register stops any current activity and clears the Active bit of the Status register. If the Active bit is already cleared, writing to this register has no effect.
Continue	0	A write to this register continues the I/O Generator from the current setup. Counters are not reset, and FIFOs are not cleared. A write to this register while the I/O Generator is active has no effect.
ClearFIFOsOnGo	1	0 = Don't clear FIFOs on a write to the Go bit. 1 = Do clear FIFOs on a write to the Go bit.
Status	8	Status flags

The Status register has the following values

Register Name	# bits	Description
Active	1	0 = Currently inactive 1 = Currently active
Reserved	7	-

Caching

Several registers are used to control the caching mechanism, specifying which cache group to use for inputs, outputs etc. See the section on the Data cache 76 for more information about cache groups.

Register Name	# bits	Description
CacheGroup1	4	Defines cache group to read data from
CacheGroup2	4	Defines which cache group to write data to, and in the case of the ImagePyramidLookup I/O mode, defines the cache to use for reading the Level Information Table.

Image Iterators = Sequential Automatic Access to pixels

The primary image pixel access method for software and hardware algorithms is via Image Iterators. Image iterators perform all of the addressing and access to the caches of the pixels within an image channel and read, write or read & write pixels for their client. Read Iterators read pixels in a specific order for their clients, and Write Iterators write pixels in a specific order for their clients. Clients of Iterators read pixels from the local Input FIFO or write pixels via the local Output FIFO.

Read Image Iterators read through an image in a specific order, placing the pixel data into the local Input FIFO. Every time a client reads a pixel from the Input FIFO, the Read Iterator places the next pixel from the image (via the Data cache 76) into the FIFO.

Write Image Iterators write pixels in a specific order to write out the entire image. Clients write pixels to the Output FIFO that is in turn read by the Write Image Iterator and written to DRAM via the Data cache 76.

Typically a VLIW process will have its input tied to a Read Iterator, and output tied to a corresponding Write Iterator. From the PU e.g 178 microcode program's perspective, the FIFO is the effective interface to DRAM. The actual method of carrying out the storage (apart from the logical ordering of the data) is not of concern. Although the FIFO is perceived to be effectively unlimited in length, in practice the FIFO is of limited length, and there can be delays storing and retrieving data, especially if several memory accesses are competing. A variety of Image Iterators exist to cope with the most common addressing requirements of image processing algorithms. In most cases there is a corresponding Write Iterator for each Read Iterator. The different Iterators are listed in the following table:

Read Iterators	**Write Iterators**
Sequential Read	Sequential Write
Box Read	-
Vertical Strip Read	Vertical Strip Write

The 4 bit Address Mode Register is used to determine the Iterator type:

Bit #	**Address Mode**
3	0 = This addressing mode is an Iterator
2 to 0	Iterator Mode 001 = Sequential Iterator 010 = Box [read only] 100 = Vertical Strip remaining bit patterns are reserved

The Access Specific registers are used as follows:

Register Name	LocalName	Description
$AccessSpecific_1$	Flags	Flags used for reading and writing
$AccessSpecific_2$	XBoxSize	Determines the size in X of Box Read. Valid values are 3, 5, and 7.
$AccessSpecific_3$	YBoxSize	Determines the size in Y of Box Read. Valid values are 3, 5, and 7.
$AccessSpecific_4$	BoxOffset	Offset between one pixel center and the next during a Box Read only. Usual value is 1, but other useful values include 2, 4, 8... See Box Read for more details.

The Flags register ($AccessSpecific_1$) contains a number of flags used to determine factors affecting the reading and writing of data. The Flags register has the following composition:

Label	#bits	Description
ReadEnable	1	Read data from DRAM
WriteEnable	1	Write data to DRAM [not valid for Box mode]
PassX	1	Pass X (pixel) ordinate back to Input FIFO
PassY	1	Pass Y (row) ordinate back to Input FIFO
Loop	1	0 = Do not loop through data 1 = Loop through data
Reserved	11	Must be 0

Notes on ReadEnable and WriteEnable:

When **ReadEnable** is set, the I/O Address Generator acts as a Read Iterator, and therefore reads the image in a particular order, placing the pixels into the Input FIFO.

When **WriteEnable** is set, the I/O Address Generator acts as a Write Iterator, and therefore writes the image in a particular order, taking the pixels from the Output FIFO.

When both **ReadEnable** and **WriteEnable** are set, the I/O Address Generator acts as a Read Iterator and as a Write Iterator, reading pixels into the Input FIFO, and writing pixels from the Output FIFO. Pixels are only written after they have been read – i.e. the Write Iterator will never go faster than the Read Iterator. Whenever this mode is used, care should be taken to ensure balance between in and out processing by the VLIW microcode. Note that separate cache groups can be specified on reads and writes by loading different values in **CacheGroup1** and **CacheGroup2**.

Notes on PassX and PassY:

If **PassX** and **PassY** are both set, the Y ordinate is placed into the Input FIFO before the X ordinate.

PassX and **PassY** are only intended to be set when the **ReadEnable** bit is clear. Instead of passing the ordinates to the address generator, the ordinates are placed directly into the Input FIFO. The ordinates advance as they are removed from the FIFO.

If **WriteEnable** bit is set, the VLIW program must ensure that it balances reads of ordinates from the Input FIFO with writes to the Output FIFO, as writes will only occur up to the ordinates (see note on **ReadEnable** and **WriteEnable** above).

Notes on Loop:

If the **Loop** bit is set, reads will recommence at [**StartPixel**, **StartRow**] once it has reached [**EndPixel**, **EndRow**]. This is ideal for processing a structure such a convolution kernel or a dither cell matrix, where the data must be read repeatedly.

Looping with **ReadEnable** and **WriteEnable** set can be useful in an environment keeping a single line history, but only where it is useful to have reading occur before writing. For a FIFO effect (where writing occurs before reading in a length constrained fashion), use an appropriate Table I/O addressing mode instead of an Image Iterator.

Looping with only **WriteEnable** set creates a written window of the last N pixels. This can be used with an asynchronous process that reads the data from the window. The Artcard Reading algorithm makes use of this mode.

Sequential Read and Write Iterators

Fig. 17 illustrates the pixel data format. The simplest Image Iterators are the Sequential Read Iterator and corresponding Sequential Write Iterator. The Sequential Read Iterator presents the pixels from a channel one line at a time from top to bottom, and within a line, pixels are presented left to right. The padding bytes are not presented to the client. It is most useful for algorithms that must perform some process on each pixel from an image but don't care about the order of the pixels being processed, or want the data specifically in this order. Complementing the Sequential Read Iterator is the Sequential Write Iterator. Clients write pixels to the Output FIFO. A Sequential Write Iterator subsequently writes out a valid image using appropriate caching and appropriate padding bytes. Each Sequential Iterator requires access to 2 cache lines. When reading, while 32 pixels are presented from one cache line, the other cache line can be loaded from memory. When writing, while 32 pixels are being filled up in one cache line, the other can be being written to memory.

A process that performs an operation on each pixel of an image independently would typically use a Sequential Read Iterator to obtain pixels, and a Sequential Write Iterator to write the new pixel values to their corresponding locations within the destination image. Such a process is shown in Fig. 18.

In most cases, the source and destination images are different, and are represented by 2 I/O Address Generators 189, 190. However it can be valid to have the source image and destination image to be the same, since a given input pixel is not read more than once. In that case, then the same Iterator can be used for both input and output, with both the **ReadEnable** and **WriteEnable** registers set appropriately. For maximum efficiency, 2 different cache groups should be used – one for reading and the other for writing. If data is being created by a VLIW process to be written via a Sequential Write Iterator, the **PassX** and **PassY** flags can be used to generate coordinates that are then passed down the Input FIFO. The VLIW process can use these coordinates and create the output data appropriately.

Box Read Iterator

The Box Read Iterator is used to present pixels in an order most useful for performing operations such as general-purpose filters and convolve. The Iterator presents pixel values in a square box around the sequentially read pixels. The box is limited to being 1, 3, 5, or 7 pixels wide in X and Y (set **XBoxSize** and **YBoxSize**– they must be the same value or 1 in one dimension and 3, 5, or 7 in the other). The process is shown in Fig. 19:

BoxOffset: This special purpose register is used to determine a sub-sampling in terms of which input pixels will be used as the center of the box. The usual value is 1, which means that each pixel is used as the center of the box. The value "2" would be useful in scaling an image down by 4:1 as in the case of building an image pyramid. Using pixel addresses from the previous diagram, the box would be centered on pixel 0, then 2, 8, and 10. The Box Read Iterator requires access to a maximum of 14 (2 x 7) cache lines. While pixels are presented from one set of 7 lines, the other cache lines can be loaded from memory.

Box Write Iterator

There is no corresponding Box Write Iterator, since the duplication of pixels is only required on input. A process that uses the Box Read Iterator for input would most likely use the Sequential Write Iterator for output since they are in sync. A good example is the convolver, where N input pixels are read to calculate 1 output pixel. The process flow is as illustrated in Fig. 20. The source and destination images should not occupy the same memory when using a Box Read Iterator, as subsequent lines of an image require the original (not newly calculated) values.

Vertical-Strip Read and Write Iterators

In some instances it is necessary to write an image in output pixel order, but there is no knowledge about the direction of coherence in input pixels in relation to output pixels. An example of this is rotation. If an image is rotated 90 degrees, and we process the output pixels horizontally, there is a complete loss of cache coherence. On the other hand, if we process the output image one cache line's width of pixels at a time and then advance to the next line (rather than advance to the next cache-line's worth of pixels on the same line), we will gain cache coherence for our input image pixels. It can also be the case that there is known 'block' coherence in the input pixels (such as color coherence), in which case the read governs the processing order, and the write, to be synchronized, must follow the same pixel order.

The order of pixels presented as input (Vertical-Strip Read), or expected for output (Vertical–Strip Write) is the same. The order is pixels 0 to 31 from line 0, then pixels 0 to 31 of line 1 etc for all lines of the image, then pixels 32 to 63 of line 0, pixels 32 to 63 of line 1 etc. In the final vertical strip there may not be exactly 32 pixels wide. In this case only the actual pixels in the image are presented or expected as input. This process is illustrated in Fig. 21.

process that requires only a Vertical-Strip Write Iterator will typically have a way of mapping input pixel coordinates given an output pixel coordinate. It would access the input image pixels according to this mapping, and coherence is determined by having sufficient cache lines on the 'random-access' reader for the input image. The coordinates will typically be generated by setting the **PassX** and **PassY** flags on the VerticalStripWrite Iterator, as shown in the process overview illustrated in Fig. 22.

It is not meaningful to pair a Write Iterator with a Sequential Read Iterator or a Box read Iterator, but a Vertical-Strip Write Iterator does give significant improvements in performance when there is a non trivial mapping between input and output coordinates.

It can be meaningful to pair a Vertical Strip Read Iterator and Vertical Strip Write Iterator. In this case it is possible to assign both to a single ALU 188 if input and output images are the same. If coordinates are required, a further Iterator

must be used with **PassX** and **PassY** flags set. The Vertical Strip Read/Write Iterator presents pixels to the Input FIFO, and accepts output pixels from the Output FIFO. Appropriate padding bytes will be inserted on the write. Input and output require a minimum of 2 cache lines each for good performance.

Table I/O Addressing Modes

It is often necessary to lookup values in a table (such as an image). Table I/O addressing modes provide this functionality, requiring the client to place the index/es into the Output FIFO. The I/O Address Generator then processes the index/es, looks up the data appropriately, and returns the looked-up values in the Input FIFO for subsequent processing by the VLIW client.

1D, 2D and 3D tables are supported, with particular modes targeted at interpolation. To reduce complexity on the VLIW client side, the index values are treated as fixed-point numbers, with **AccessSpecific** registers defining the fixed point and therefore which bits should be treated as the integer portion of the index. Data formats are restricted forms of the general Image Characteristics in that the **PixelOffset** register is ignored, the data is assumed to be contiguous within a row, and can only be 8 or 16 bits (1 or 2 bytes) per data element. The 4 bit Address Mode Register is used to determine the I/O type:

Bit #	**Address Mode**
3	1 = This addressing mode is Table I/O
2 to 0	000 = 1D Direct Lookup 001 = 1D Interpolate (linear) 010 = DRAM FIFO 011 = Reserved 100 = 2D Interpolate (bi-linear) 101 = Reserved 110 = 3D Interpolate (tri-linear) 111 = Image Pyramid Lookup

The access specific registers are:

Register Name	**LocalName**	**#bits**	**Description**
$AccessSpecific_1$	Flags	8	General flags for reading and writing. See below for more information.
$AccessSpecific_2$	FractX	8	Number of fractional bits in X index
$AccessSpecific_3$	FractY	8	Number of fractional bits in Y index
$AccessSpecific_4$ (low 8 bits / next 12 or 24 bits))	FractZ	8	Number of fractional bits in Z index
	ZOffset	12 or 24	See below

FractX, **FractY**, and **FractZ** are used to generate addresses based on indexes, and interpret the format of the index in terms of significant bits and integer/fractional components. The various parameters are only defined as required by the number of dimensions in the table being indexed. A 1D table only needs **FractX**, a 2D table requires **FractX** and **FractY**. Each **Fract_** value consists of the number of fractional bits in the corresponding index. For example, an X index may be in the format 5:3. This would indicate 5 bits of integer, and 3 bits of fraction. **FractX** would therefore be set to 3. A simple 1D lookup could have the format 8:0, i.e. no fractional component at all. **FractX** would therefore be 0. **ZOffset** is only required for 3D lookup and takes on two different interpretations. It is described more fully in the 3D-table lookup section. The **Flags** register (AccessSpecific$_1$) contains a number of flags used to determine factors affecting the reading (and in one case, writing) of data. The Flags register has the following composition:

Label	**#bits**	**Description**
ReadEnable	1	Read data from DRAM
WriteEnable	1	**Write data to DRAM [only valid for 1D direct lookup]**
DataSize	1	0 = 8 bit data **1 = 16 bit data**
Reserved	5	Must be 0

With the exception of the 1D Direct Lookup and DRAM FIFO, all Table I/O modes only support reading, and not writing. Therefore the **ReadEnable** bit will be set and the **WriteEnable** bit will be clear for all I/O modes other than these two modes. The 1D Direct Lookup supports 3 modes:

Read only, where the **ReadEnable** bit is set and the **WriteEnable** bit is clear

Write only, where the **ReadEnable** bit is clear and the **WriteEnable** bit is clear

Read-Modify-Write, where both **ReadEnable** and the **WriteEnable** bits are set

The different modes are described in the **1D Direct Lookup** section below. The DRAM FIFO mode supports only 1 mode:

Write-Read mode, where both **ReadEnable** and the **WriteEnable** bits are set

This mode is described in the **DRAM FIFO** section below. The **DataSize** flag determines whether the size of each data elements of the table is 8 or 16 bits. Only the two data sizes are supported. 32 bit elements can be created in either of 2 ways depending on the requirements of the process:

Reading from 2 16-bit tables simultaneously and combining the result. This is convenient if timing is an issue, but has the disadvantage of consuming 2 I/O Address Generators 189, 190, and each 32-bit element is not readable by the CPU as a 32-bit entity.

Reading from a 16-bit table twice and combining the result. This is convenient since only 1 lookup is used, although different indexes must be generated and passed into the lookup.

1 Dimensional Structures

Direct Lookup

A direct lookup is a simple indexing into a 1 dimensional lookup table. Clients can choose between 3 access modes by setting appropriate bits in the **Flags** register:

Read only

Write only

Read-Modify-Write

Read Only

A client passes the fixed-point index X into the Output FIFO, and the 8 or 16-bit value at Table[Int(X)] is returned in the Input FIFO. The fractional component of the index is completely ignored. If the index is out of bounds, the **DuplicateEdge** flag determines whether the edge pixel or **ConstantPixel** is returned. The address generation is straightforward:

If **DataSize** indicates 8 bits, X is barrel-shifted right **FractX** bits, and the result is added to the table's base address **ImageStart**.

If **DataSize** indicates 16 bits, X is barrel-shifted right **FractX** bits, and the result shifted left 1 bit (bit0 becomes 0) is added to the table's base address **ImageStart**.

The 8 or 16-bit data value at the resultant address is placed into the Input FIFO. Address generation takes 1 cycle, and transferring the requested data from the cache to the Output FIFO also takes 1 cycle (assuming a cache hit). For example, assume we are looking up values in a 256-entry table, where each entry is 16 bits, and the index is a 12 bit fixed-point format of 8:4. **FractX** should be 4, and **DataSize** 1. When an index is passed to the lookup, we shift right 4 bits, then add the result shifted left 1 bit to **ImageStart**.

Write Only

A client passes the fixed-point index X into the Output FIFO followed by the 8 or 16-bit value that is to be written to the specified location in the table. A complete transfer takes a minimum of 2 cycles. 1 cycle for address generation, and 1 cycle to transfer the data from the FIFO to DRAM. There can be an arbitrary number of cycles between a VLIW process placing the index into the FIFO and placing the value to be written into the FIFO. Address generation occurs in the same way as Read Only mode, but instead of the data being read from the address, the data from the Output FIFO is written to the address. If the address is outside the table range, the data is removed from the FIFO but not written to DRAM.

Read-Modify-Write

A client passes the fixed-point index X into the Output FIFO, and the 8 or 16-bit value at Table[Int(X)] is returned in the Input FIFO. The next value placed into the Output FIFO is then written to Table[Int(X)], replacing the value that had been returned earlier. The general processing loop then, is that a process reads from a location, modifies the value, and writes it back. The overall time is 4 cycles:

Generate address from index

Return value from table

Modify value in some way

Write it back to the table

There is no specific read/write mode where a client passes in a flag saying "read from X" or "write to X". Clients can simulate a "read from X" by writing the original value, and a "write to X" by simply ignoring the returned value.

However such use of the mode is not encouraged since each action consumes a minimum of 3 cycles (the modify is not required) and 2 data accesses instead of 1 access as provided by the specific Read and Write modes.

Interpolate table

This is the same as a Direct Lookup in Read mode except that two values are returned for a given fixed-point index X instead of one. The values returned are Table[Int(X)], and Table[Int(X)+1]. If either index is out of bounds the **DuplicateEdge** flag determines whether the edge pixel or **ConstantPixel** is returned. Address generation is the same as Direct Lookup, with the exception that the second address is simply Address1+ 1 or 2 depending on 8 or 16 bit data. Transferring the requested data to the Output FIFO takes 2 cycles (assuming a cache hit), although two 8-bit values may actually be returned from the cache to the Address Generator in a single 16-bit fetch.

DRAM FIFO

A special case of a read/write 1D table is a DRAM FIFO. It is often necessary to have a simulated FIFO of a given length using DRAM and associated caches. With a DRAM FIFO, clients do not index explicitly into the table, but write to the Output FIFO as if it was one end of a FIFO and read from the Input FIFO as if it was the other end of the same logical FIFO. 2 counters keep track of input and output positions in the simulated FIFO, and cache to DRAM as needed. Clients need to set both **ReadEnable** and **WriteEnable** bits in the **Flags** register.

An example use of a DRAM FIFO is keeping a single line history of some value. The initial history is written before processing begins. As the general process goes through a line, the previous line's value is retrieved from the FIFO, and this line's value is placed into the FIFO (this line will be the previous line when we process the next line). So long as input and outputs match each other on average, the Output FIFO should always be full. Consequently there is effectively no access delay for this kind of FIFO (unless the total FIFO length is very small – say 3 or 4 bytes, but that would defeat the purpose of the FIFO).

2 Dimensional Tables

Direct Lookup

A 2 dimensional direct lookup is not supported. Since all cases of 2D lookups are expected to be accessed for bi-linear interpolation, .a special bi-linear lookup has been implemented.

Bi-Linear lookup

This kind of lookup is necessary for bi-linear interpolation of data from a 2D table. Given fixed-point X and Y coordinates (placed into the Output FIFO in the order Y, X), 4 values are returned after lookup. The values (in order) are:

Table[Int(X), Int(Y)]

Table[Int(X)+1, Int(Y)]

Table[Int(X), Int(Y)+1]

Table[Int(X)+1, Int(Y)+1]

The order of values returned gives the best cache coherence. If the data is 8-bit, 2 values are returned each cycle over 2 cycles with the low order byte being the first data element. If the data is 16-bit, the 4 values are returned in 4 cycles, 1 entry per cycle. Address generation takes 2 cycles. The first cycle has the index (Y) barrel-shifted right **FractY** bits being multiplied by **RowOffset**, with the result added to **ImageStart**. The second cycle shifts the X index right by **FractX** bits, and then either the result (in the case of 8 bit data) or the result shifted left 1 bit (in the case of 16 bit data) is added to the result from the first cycle. This gives us address Adr = address of Table[Int(X), Int(Y)]:

Adr = ImageStart
+ ShiftRight(Y, FractY)* RowOffset)
+ ShiftRight(X, FractX)

We keep a copy of Adr in AdrOld for use fetching subsequent entries.

If the data is 8 bits, the timing is 2 cycles of address generation, followed by 2 cycles of data being returned (2 table entries per cycle).

If the data is 16 bits, the timing is 2 cycles of address generation, followed by 4 cycles of data being returned (1 entry per cycle)

The following 2 tables show the method of address calculation for 8 and 16 bit data sizes:

Cycle	Calculation while fetching 2 x 8-bit data entries from Adr
1	Adr = Adr + RowOffset
2	<preparing next lookup>

Cycle	Calculation while fetching 1 x 16-bit data entry from Adr
1	Adr = Adr + 2
2	Adr = AdrOld + RowOffset
3	Adr = Adr + 2
4	<preparing next lookup>

In both cases, the first cycle of address generation can overlap the insertion of the X index into the FIFO, so the effective timing can be as low as 1 cycle for address generation, and 4 cycles of return data. If the generation of indexes is 2 steps ahead of the results, then there is no effective address generation time, and the data is simply produced at the appropriate rate (2 or 4 cycles per set).

3 Dimensional Lookup

Direct Lookup

Since all cases of 2D lookups are expected to be accessed for tri-linear interpolation, .two special tri-linear lookups have been implemented. The first is a straightforward lookup table, while the second is for tri-linear interpolation from an Image Pyramid.

Tri-linear lookup

This type of lookup is useful for 3D tables of data, such as color conversion tables. The standard image parameters define a single XY plane of the data – i.e. each plane consists of **ImageHeight** rows, each row containing **RowOffset** bytes. In most circumstances, assuming contiguous planes, one XY plane will be **ImageHeight** x **RowOffset** bytes after another. Rather than assume or calculate this offset, the software via the CPU must provide it in the form of a 12-bit **ZOffset** register. In this form of lookup, given 3 fixed-point indexes in the order Z, Y, X, 8 values are returned in order from the lookup table:

Table[Int(X), Int(Y), Int(Z)]

Table[Int(X)+1, Int(Y), Int(Z)]

Table[Int(X), Int(Y)+1, Int(Z)]

Table[Int(X)+1, Int(Y)+1, Int(Z)]

Table[Int(X), Int(Y), Int(Z)+1]

Table[Int(X)+1, Int(Y), Int(Z)+1]

Table[Int(X), Int(Y)+1, Int(Z)+1]

Table[Int(X)+1, Int(Y)+1, Int(Z)+1]

The order of values returned gives the best cache coherence. If the data is 8-bit, 2 values are returned each cycle over 4 cycles with the low order byte being the first data element. If the data is 16-bit, the 4 values are returned in 8 cycles, 1 entry per cycle. Address generation takes 3 cycles. The first cycle has the index (Z) barrel-shifted right **FractZ** bits being multiplied by the 12-bit **ZOffset** and added to **ImageStart**. The second cycle has the index (Y) barrel-shifted right **FractY** bits being multiplied by **RowOffset**, with the result added to the result of the previous cycle. The second cycle shifts the X index right by **FractX** bits, and then either the result (in the case of 8 bit data) or the result shifted left 1 bit (in the case of 16 bit data) is added to the result from the second cycle. This gives us address Adr = address of Table[Int(X), Int(Y), Int(Z)]:

Adr = ImageStart

+ (ShiftRight(Z, FractZ) * ZOffset)

+ (ShiftRight(Y, FractY)* RowOffset)

+ ShiftRight(X, FractX)

We keep a copy of Adr in AdrOld for use fetching subsequent entries.

If the data is 8 bits, the timing is 2 cycles of address generation, followed by 2 cycles of data being returned (2 table entries per cycle).

If the data is 16 bits, the timing is 2 cycles of address generation, followed by 4 cycles of data being returned (1 entry per cycle)

The following 2 tables show the method of address calculation for 8 and 16 bit data sizes:

Cycle	Calculation while fetching 2 x 8-bit data entries from Adr
1	Adr = Adr + RowOffset
2	Adr = AdrOld + ZOffset
3	Adr = Adr + RowOffset
4	<preparing next lookup>

Cycle	Calculation while fetching 1 x 16-bit data entries from Adr
1	Adr = Adr + 2
2	Adr = AdrOld + RowOffset
3	Adr = Adr + 2
4	Adr, AdrOld =AdrOld + Zoffset
5	Adr = Adr + 2
6	Adr = AdrOld + RowOffset
7	Adr = Adr + 2
8	<preparing next lookup>

In both cases, the cycles of address generation can overlap the insertion of the indexes into the FIFO, so the effective timing for a single one-off lookup can be as low as 1 cycle for address generation, and 4 cycles of return data. If the generation of indexes is 2 steps ahead of the results, then there is no effective address generation time, and the data is simply produced at the appropriate rate (4 or 8 cycles per set).

Image Pyramid Lookup

During brushing, tiling, and warping it is necessary to compute the average color of a particular area in an image. Rather than calculate the value for each area given, these functions make use of an image pyramid. The description and construction of an image pyramid is detailed in the section on Internal Image Formats in the **DRAM interface 81** chapter of this document. This section is concerned with a method of addressing given pixels in the pyramid in terms of 3 fixed-point indexes ordered: level (Z), Y, and X. Note that Image Pyramid lookup assumes 8 bit data entries, so the **DataSize** flag is completely ignored. After specification of Z, Y, and X, the following 8 pixels are returned via the Input FIFO:

The pixel at [Int(X), Int(Y)], level Int(Z)

The pixel at [Int(X)+1, Int(Y)], level Int(Z)

The pixel at [Int(X), Int(Y)+1], level Int(Z)

The pixel at [Int(X)+1, Int(Y)+1], level Int(Z)

The pixel at [Int(X), Int(Y)], level Int(Z)+1

The pixel at [Int(X)+1, Int(Y)], level Int(Z)+1

The pixel at [Int(X), Int(Y)+1], level Int(Z)+1

The pixel at [Int(X)+1, Int(Y)+1], level Int(Z)+1

The 8 pixels are returned as 4 x 16 bit entries, with X and X+1 entries combined hi/lo. For example, if the scaled (X, Y) coordinate was (10.4, 12.7) the first 4 pixels returned would be: (10, 12), (11, 12), (10, 13) and (11, 13). When a coordinate is outside the valid range, clients have the choice of edge pixel duplication or returning of a constant color value via the **DuplicateEdgePixels** and **ConstantPixel** registers (only the low 8 bits are used). When the Image Pyramid has been constructed, there is a simple mapping from level 0 coordinates to level Z coordinates. The method is simply to shift the X or Y coordinate right by Z bits. This must be done in addition to the number of bits already shifted to retrieve the integer portion of the coordinate (i.e. shifting right **FractX** and **FractY** bits for X and Y ordinates respectively). To find the ImageStart and RowOffset value for a given level of the image pyramid, the 24-bit **ZOffset** register is used as a pointer to a Level Information Table. The table is an array of records, each representing a given level of the pyramid, ordered by level number. Each record consists of a 16-bit offset ZOffset from **ImageStart** to that level of the pyramid (64-byte aligned address as lower 6 bits of the offset are not present), and a 12 bit ZRowOffset for that level. Element 0 of the table would contain a ZOffset of 0, and a ZRowOffset equal to the general register **RowOffset**, as it simply points to the full sized image. The ZOffset value at element N of the table should be added to **ImageStart** to yield the effective ImageStart of level N of the image pyramid. The RowOffset value in element N of the table contains the RowOffset value for level N. The software running on the CPU must set up the table appropriately before using this addressing mode. The actual address generation is outlined here in a cycle by cycle description:

Cycle	Load Register	From Address	Other Operations
0	-	-	ZAdr = ShiftRight(Z, FractZ) + ZOffset ZInt = ShiftRight(Z, FractZ)
1	ZOffset	Zadr	ZAdr += 2 YInt = ShiftRight(Y, FractY)
2	ZRowOffset	ZAdr	ZAdr += 2 YInt = ShiftRight(YInt, ZInt) Adr = ZOffset + ImageStart
3	ZOffset	ZAdr	ZAdr += 2 Adr += ZrowOffset * YInt XInt = ShiftRight(X, FractX)
4	ZAdr	ZAdr	Adr += ShiftRight(XInt, ZInt) ZOffset += ShiftRight(XInt, 1)
5	FIFO	Adr	Adr += ZrowOffset ZOffset += ImageStart
6	FIFO	Adr	Adr = (ZAdr * ShiftRight(Yint,1)) + ZOffset
7	FIFO	Adr	Adr += Zadr
8	FIFO	Adr	< Cycle 0 for next retrieval>

The address generation as described can be achieved using a single Barrel Shifter, 2 adders, and a single 16x16 multiply/add unit yielding 24 bits. Although some cycles have 2 shifts, they are either the same shift value (i.e. the output of the Barrel Shifter is used two times) or the shift is 1 bit, and can be hard wired. The following internal registers are required: ZAdr, Adr, ZInt, YInt, XInt, ZRowOffset, and ZImageStart. The _Int registers only need to be 8 bits maximum, while the others can be up to 24 bits. Since this access method only reads from, and does not write to image pyramids, the **CacheGroup2** is used to lookup the Image Pyramid Address Table (via ZAdr). **CacheGroup1** is used for lookups to the image pyramid itself (via Adr). The address table is around 22 entries (depending on original image size), each of 4 bytes. Therefore 3 or 4 cache lines should be allocated to **CacheGroup2**, while as many cache lines as possible should be allocated to **CacheGroup1**. The timing is 8 cycles for returning a set of data, assuming that Cycle 8 and Cycle 0 overlap in operation – i.e. the next request's Cycle 0 occurs during Cycle 8. This is acceptable since Cycle 0 has no memory access, and Cycle 8 has no specific operations.

Generation of Coordinates using VLIW Vector Processor 74

Some functions that are linked to Write Iterators require the X and/or Y coordinates of the current pixel being processed in part of the processing pipeline. Particular processing may also need to take place at the end of each row, or column being processed. In most cases, the **PassX** and **PassY** flags should be sufficient to completely generate all coordinates. However, if there are special requirements, the following functions can be used. The calculation can be

spread over a number of ALUs, for a single cycle generation, or be in a single ALU 188 for a multi-cycle generation.

Generate Sequential [X, Y]

When a process is processing pixels in sequential order according to the Sequential Read Iterator (or generating pixels and writing them out to a Sequential Write Iterator), the following process can be used to generate X, Y coordinates instead of **PassX/PassY** flags as shown in Fig. 23.

The coordinate generator counts up to **ImageWidth** in the X ordinate, and once per **ImageWidth** pixels increments the Y ordinate. The actual process is illustrated in Fig. 24, where the following constants are set by software:

Constant	**Value**
K_1	ImageWidth
K_2	ImageHeight (optional)

The following registers are used to hold temporary variables:

Variable	**Value**
Reg_1	X (starts at 0 each line)
Reg_2	Y (starts at 0)

The requirements are summarized as follows:

Requirements	***+**	**+**	**R**	**K**	**LU**	**Iterators**
General	0	3/4	2	1/2	0	0
TOTAL	0	3/4	2	1/2	0	0

Generate Vertical Strip [X, Y]

When a process is processing pixels in order to write them to a Vertical Strip Write Iterator, and for some reason cannot use the **PassX/PassY** flags, the process as illustrated in Fig. 25 can be used to generate X, Y coordinates. The coordinate generator simply counts up to ImageWidth in the X ordinate, and once per ImageWidth pixels increments the Y ordinate. The actual process is illustrated in Fig. 26, where the following constants are set by software:

Constant	Value
K_1	32
K_2	ImageWidth
K_3	ImageHeight

The following registers are used to hold temporary variables:

Variable	Value
Reg_1	StartX (starts at 0, and is incremented by 32 once per vertical strip)
Reg_2	X
Reg_3	EndX (starts at 32 and is incremented by 32 to a maximum of ImageWidth) once per vertical strip)
Reg_4	Y

The requirements are summarized as follows:

Requirements	*+	+	R	K	LU	Iterators
General	0	4	4	3	0	0
TOTAL	0	4	4	3	0	0

The calculations that occur once per vertical strip (2 additions, one of which has an associated MIN) are not included in the general timing statistics because they are not really part of the per pixel timing. However they do need to be taken into account for the programming of the microcode for the particular function.

Image Sensor Interface (ISI 83)

The Image Sensor Interface (ISI 83) takes data from the CMOS Image Sensor and makes it available for storage in DRAM. The image sensor has an aspect ratio of 3:2, with a typical resolution of 750 x 500 samples, yielding 375K (8 bits per pixel). Each 2x2 pixel block has the configuration as shown in Fig. 27. The ISI 83 is a state machine that sends control information to the Image Sensor, including frame sync pulses and pixel clock pulses in order to read the image. Pixels are read from the image sensor and placed into the VLIW Input FIFO 78. The VLIW is then able to process and/or store the pixels. This is illustrated further in Fig. 28. The ISI 83 is used in conjunction with a VLIW program that stores the sensed Photo Image in DRAM. Processing occurs in 2 steps:

A small VLIW program reads the pixels from the FIFO and writes them to DRAM via a Sequential Write Iterator.

The Photo Image in DRAM is rotated 90, 180 or 270 degrees according to the orientation of the camera when the photo was taken.

If the rotation is 0 degrees, then step 1 merely writes the Photo Image out to the final Photo Image location and step 2 is not performed. If the rotation is other than 0 degrees, the image is written out to a temporary area (for example into the Print Image memory area), and then rotated during step 2 into the final Photo Image location. Step 1 is very simple microcode, taking data from the VLIW Input FIFO 78 and writing it to a Sequential Write Iterator. Step 2's rotation is accomplished by using the accelerated Vark Affine Transform function. The processing is performed in 2 steps in order to reduce design complexity and to re-use the Vark affine transform rotate logic already required for images. This is acceptable since both steps are completed in approximately **0.03 seconds**, a time imperceptible to the operator of the Artcam. Even so, the read process is sensor speed bound, taking 0.02 seconds to read the full frame, and approximately 0.01 seconds to rotate the image.

The orientation is important for converting between the sensed Photo Image and the internal format image, since the

relative positioning of R, G, and B pixels changes with orientation.. The processed image may also have to be rotated during the Print process in order to be in the correct orientation for printing. The 3D model of the Artcam has 2 image sensors, with their inputs multiplexed to a single ISI 83 (different microcode, but same ACP 31). Since each sensor is a frame store, both images can be taken simultaneously, and then transferred to memory one at a time.

Display Controller 88

When the "Take" button on an Artcam is half depressed, the TFT will display the current image from the image sensor (converted via a simple VLIW process). Once the Take button is fully depressed, the Taken Image is displayed. When the user presses the Print button and image processing begins, the TFT is turned off. Once the image has been printed the TFT is turned on again. The Display Controller 88 is used in those Artcam models that incorporate a flat panel display. An example display is a TFT LCD of resolution 240 x 160 pixels. The structure of the Display Controller 88 isl illustrated in Fig. 29. The Display Controller 88 State Machine contains registers that control the timing of the Sync Generation, where the display image is to be taken from (in DRAM via the Data cache 76 via a specific Cache Group), and whether the TFT should be active or not (via TFT Enable) at the moment. The CPU can write to these registers via the low speed bus. Displaying a 240 x 160 pixel image on an RGB TFT requires 3 components per pixel. The image taken from DRAM is displayed via 3 DACs, one for each of the R, G, and B output signals. At an image refresh rate of 30 frames per second (60 fields per second) the Display Controller 88 requires data transfer rates of:

$$240 \times 160 \times 3 \times 30 = 3.5\text{MB per second}$$

This data rate is low compared to the rest of the system. However it is high enough to cause VLIW programs to slow down during the intensive image processing. The general principles of TFT operation should reflect this.

Image Data Formats

As stated previously, the DRAM Interface 81 is responsible for interfacing between other client portions of the ACP chip and the RAMBUS DRAM. In effect, each module within the DRAM Interface is an address generator.

There are three logical types of images manipulated by the ACP. They are:

-CCD Image, which is the Input Image captured from the CCD.

-Internal Image format – the Image format utilised internally by the Artcam device.

Print Image - the Output Image format printed by the Artcam

These images are typically different in color space, resolution, and the output & input color spaces which can vary from camera to camera. For example, a CCD image on a low-end camera may be a different resolution, or have different color characteristics from that used in a high-end camera. However all internal image formats are the same format in terms of color space across all cameras.

In addition, the three image types can vary with respect to which direction is 'up'. The physical orientation of the camera causes the notion of a portrait or landscape image, and this must be maintained throughout processing. For this reason, the internal image is always oriented correctly, and rotation is performed on images obtained from the CCD and during the print operation.

CCD Image Organization

Although many different CCD image sensors could be utilised, it will be assumed that the CCD itself is a 750 x 500 image sensor, yielding 375,000 bytes (8 bits per pixel). Each 2x2 pixel block having the configuration as

depicted in Fig. 30.

A CCD Image as stored in DRAM has consecutive pixels with a given line contiguous in memory. Each line is stored one after the other. The image sensor Interface 83 is responsible for taking data from the CCD and storing it in the DRAM correctly oriented. Thus a CCD image with rotation 0 degrees has its first line G, R, G, R, G, R... and its second line as B, G, B, G, B, G.... If the CCD image should be portrait, rotated 90 degrees, the first line will be R, G, R, G, R, G and the second line G, B, G, B, G, B...etc.

Pixels are stored in an interleaved fashion since all color components are required in order to convert to the internal image format.

It should be noted that the ACP 31 makes no assumptions about the CCD pixel format, since the actual CCDs for imaging may vary from Artcam to Artcam, and over time. All processing that takes place via the hardware is controlled by major microcode in an attempt to extend the usefulness of the ACP 31.

Internal Image Organization

Internal images typically consist of a number of channels. Vark images can include, but are not limited to:

Lab

Labα

LabΔ

αΔ

L

L, a and b correspond to components of the Lab color space, α is a matte channel (used for compositing), and Δ is a bump-map channel (used during brushing, tiling and illuminating).

The VLIW processor 74 requires images to be organized in a planar configuration. Thus a Lab image would be stored as 3 separate blocks of memory:

one block for the L channel,

one block for the a channel, and

one block for the b channel

Within each channel block, pixels are stored contiguously for a given row (plus some optional padding bytes), and rows are stored one after the other.

Turning to Fig. 31 there is illustrated an example form of storage of a logical image 100. The logical image 100 is stored in a planar fashion having L 101, a 102 and b 103 color components stored one after another. Alternatively, the logical image 100 can be stored in a compressed format having an uncompressed L component 101 and compressed A and B components 105, 106.

Turning to Fig. 32, the pixels of for line n 110 are stored together before the pixels of for line and n + 1 (111). With the image being stored in contiguous memory within a single channel.

In the 8MB-memory model, the final Print Image after all processing is finished, needs to be compressed in the chrominance channels. Compression of chrominance channels can be 4:1, causing an overall compression of 12:6, or 2:1.

Other than the final Print Image, images in the Artcam are typically not compressed. Because of memory constraints, software may choose to compress the final Print Image in the chrominance channels by scaling each of

these channels by 2:1. If this has been done, the PRINT Vark function call utilised to print an image must be told to treat the specified chrominance channels as compressed. The PRINT function is the only function that knows how to deal with compressed chrominance, and even so, it only deals with a fixed 2:1 compression ratio.

Although it is possible to compress an image and then operate on the compressed image to create the final print image, it is not recommended due to a loss in resolution. In addition, an image should only be compressed once - as the final stage before printout. While one compression is virtually undetectable, multiple compressions may cause substantial image degradation.

Clip image Organization

Clip images stored on Artcards have no explicit support by the ACP 31. Software is responsible for taking any images from the current Artcard and organizing the data into a form known by the ACP. If images are stored compressed on an Artcard, software is responsible for decompressing them, as there is no specific hardware support for decompression of Artcard images.

Image Pyramid Organization

During brushing, tiling, and warping processes utilised to manipulate an image it is often necessary to compute the average color of a particular area in an image. Rather than calculate the value for each area given, these functions make use of an image pyramid. As illustrated in Fig. 33, an image pyramid is effectively a multi-resolutionpixel- map. The original image 115 is a 1:1 representation. Low-pass filtering and sub-sampling by 2:1 in each dimension produces an image ¼ the original size 116. This process continues until the entire image is represented by a single pixel. An image pyramid is constructed from an original internal format image, and consumes 1/3 of the size taken up by the original image (1/4 + 1/16 + 1/64 + ...). For an original image of 1500 x 1000 the corresponding image pyramid is approximately ½MB. An image pyramid is constructed by a specific Vark function, and is used as a parameter to other Vark functions.

Print Image Organization

The entire processed image is required at the same time in order to print it. However the Print Image output can comprise a CMY dithered image and is only a transient image format, used within the Print Image functionality. However, it should be noted that color conversion will need to take place from the internal color space to the print color space. In addition, color conversion can be tuned to be different for different print rolls in the camera with different ink characteristics e.g. Sepia output can be accomplished by using a specific sepia toning Artcard, or by using a sepia tone print-roll (so all Artcards will work in sepia tone).

Color Spaces

As noted previously there are 3 color spaces used in the Artcam, corresponding to the different image types.

The ACP has no direct knowledge of specific color spaces. Instead, it relies on client color space conversion tables to convert between CCD, internal, and printer color spaces:

CCD:RGB

Internal:Lab

Printer:CMY

Removing the color space conversion from the ACP 31 allows:

-Different CCDs to be used in different cameras

-Different inks (in different print rolls over time) to be used in the same camera

-Separation of CCD selection from ACP design path

-A well defined internal color space for accurate color processing

Artcard Interface 87

The Artcard Interface (AI) takes data from the linear image Sensor while an Artcard is passing under it, and makes that data available for storage in DRAM. The image sensor produces 11,000 8-bit samples per scanline, sampling the Artcard at 4800 dpi. The AI is a state machine that sends control information to the linear sensor, including LineSync pulses and PixelClock pulses in order to read the image. Pixels are read from the linear sensor and placed into the VLIW Input FIFO 78. The VLIW is then able to process and/or store the pixels. The AI has only a few registers:

Register Name	Description
NumPixels	The number of pixels in a sensor line (approx 11,000)
Status	The Print Head Interface's Status Register
PixelsRemaining	The number of bytes remaining in the current line
Actions	
Reset	A write to this register resets the AI, stops any scanning, and loads all registers with 0.
Scan	A write to this register with a non-zero value sets the Scanning bit of the Status register, and causes the Artcard Interface Scan cycle to start. A write to this register with 0 stops the scanning process and clears the Scanning bit in the Status register. The Scan cycle causes the AI to transfer NumPixels bytes from the sensor to the VLIW Input FIFO 78, producing the PixelClock signals appropriately. Upon completion of NumPixels bytes, a LineSync pulse is given and the Scan cycle restarts. The PixelsRemaining register holds the number of pixels remaining to be read on the current scanline.

Note that the CPU should clear the VLIW Input FIFO 78 before initiating a Scan. The Status register has bit interpretations as follows:

Bit Name	Bits	Description
Scanning	1	If set, the AI is currently scanning, with the number of pixels remaining to be transferred from the current line recorded in PixelsRemaining. If clear, the AI is not currently scanning, so is not transferring pixels to the VLIW Input FIFO 78.

Artcard Interface (AI) 87

The Artcard Interface (AI) 87 is responsible for taking an Artcard image from the Artcard Reader 34 , and decoding it into the original data (usually a Vark script). Specifically, the AI 87 accepts signals from the Artcard scanner linear CCD 34, detects the bit pattern printed on the card, and converts the bit pattern into the original data, correcting read errors.

With no Artcard 9 inserted, the image printed from an Artcam is simply the sensed Photo Image cleaned up by any standard image processing routines. The Artcard 9 is the means by which users are able to modify a photo before printing it out. By the simple task of inserting a specific Artcard 9 into an Artcam, a user is able to define complex image processing to be performed on the Photo Image.

With no Artcard inserted the Photo Image is processed in a standard way to create the Print Image. When a single Artcard 9 is inserted into the Artcam, that Artcard's effect is applied to the Photo Image to generate the Print Image.

When the Artcard 9 is removed (ejected), the printed image reverts to the Photo Image processed in a standard way.

When the user presses the button to eject an Artcard, an event is placed in the event queue maintained by the operating system running on the Artcam Central Processor 31. When the event is processed (for example after the current Print has occurred), the following things occur:

If the current Artcard is valid, then the Print Image is marked as invalid and a 'Process Standard' event is placed in the event queue. When the event is eventually processed it will perform the standard image processing operations on the Photo Image to produce the Print Image.

The motor is started to eject the Artcard and a time-specific 'Stop-Motor' Event is added to the event queue.

Inserting an Artcard

When a user inserts an Artcard 9, the Artcard Sensor 49 detects it notifying the ACP72. This results in the software inserting an 'Artcard Inserted' event into the event queue. When the event is processed several things occur:

The current Artcard is marked as invalid (as opposed to 'none').

The Print Image is marked as invalid.

The Artcard motor 37 is started up to load the Artcard

The Artcard Interface 87 is instructed to read the Artcard

The Artcard Interface 87 accepts signals from the Artcard scanner linear CCD 34, detects the bit pattern printed on the card, and corrects errors in the detected bit pattern, producing a valid Artcard data block in DRAM.

Reading Data from the Artcard CCD – General Considerations

As illustrated in Fig. 34, the Data Card reading process has 4 phases operated while the pixel data is read from

the card. The phases are as follows:

Phase 1. Detect data area on Artcard

Phase 2. Detect bit pattern from Artcard based on CCD pixels, and write as bytes.

Phase 3. Descramble and XOR the byte-pattern

Phase 4. Decode data (Reed-Solomon decode)

As illustrated in Fig. 35, the Artcard 9 must be sampled at least at double the printed resolution to satisfy Nyquist's Theorem. In practice it is better to sample at a higher rate than this. Preferably, the pixels are sampled 230 at 3 times the resolution of a printed dot in each dimension, requiring 9 pixels to define a single dot. Thus if the resolution of the Artcard 9 is 1600 dpi, and the resolution of the sensor 34 is 4800 dpi, then using a 50mm CCD image sensor results in 9450 pixels per column. Therefore if we require 2MB of dot data (at 9 pixels per dot) then this requires 2MB*8*9/9450 = 15,978 columns = approximately 16,000 columns. Of course if a dot is not exactly aligned with the sampling CCD the worst and most likely case is that a dot will be sensed over a 16 pixel area (4x4) 231.

An Artcard 9 may be slightly warped due to heat damage, slightly rotated (up to, say 1 degree) due to differences in insertion into an Artcard reader, and can have slight differences in true data rate due to fluctuations in the speed of the reader motor 37. These changes will cause columns of data from the card not to be read as corresponding columns of pixel data. As illustrated in Fig. 36, a 1 degree rotation in the Artcard 9 can cause the pixels from a column on the card to be read as pixels across 166 columns:

Finally, the Artcard 9 should be read in a reasonable amount of time with respect to the human operator. The data on the Artcard covers most of the Artcard surface, so timing concerns can be limited to the Artcard data itself. A reading time of 1.5 seconds is adequate for Artcard reading.

The Artcard should be loaded in 1.5 seconds. Therefore all 16,000 columns of pixel data must be read from the CCD 34 in 1.5 second, i.e. 10,667 columns per second. Therefore the time available to read one column is 1/10667 seconds, or 93,747ns. Pixel data can be written to the DRAM one column at a time, completely independently from any processes that are reading the pixel data.

The time to write one column of data (9450/2 bytes since the reading can be 4 bits per pixel giving 2 x 4 bit pixels per byte) to DRAM is reduced by using 8 cache lines. If 4 lines were written out at one time, the 4 banks can be written to independently, and thus overlap latency reduced. Thus the 4725 bytes can be written in 11,840ns (4725/128 * 320ns). Thus the time taken to write a given column's data to DRAM uses just under 13% of the available bandwidth.

Decoding an Artcard

A simple look at the data sizes shows the impossibility of fitting the process into the 8MB of memory 33 if the entire Artcard pixel data (140 MB if each bit is read as a 3x3 array) as read by the linear CCD 34 is kept. For this reason, the reading of the linear CCD, decoding of the bitmap, and the un-bitmap process should take place in real-time (while the Artcard 9 is traveling past the linear CCD 34), and these processes must effectively work without having entire data stores available.

When an Artcard 9 is inserted, the old stored Print Image and any expanded Photo Image becomes invalid. The new Artcard 9 can contain directions for creating a new image based on the currently captured Photo Image. The old Print Image is invalid, and the area holding expanded Photo Image data and image pyramid is invalid, leaving more than 5MB that can be used as scratch memory during the read process. Strictly speaking, the 1MB area where the

Artcard raw data is to be written can also be used as scratch data during the Artcard read process as long as by the time the final Reed-Solomon decode is to occur, that 1MB area is free again. The reading process described here does not make use of the extra 1MB area (except as a final destination for the data).

It should also be noted that the unscrambling process requires two sets of 2MB areas of memory since unscrambling cannot occur in place. Fortunately the 5MB scratch area contains enough space for this process.

Turning now to Fig. 37, there is shown a flowchart 220 of the steps necessary to decode the Artcard data. These steps include reading in the Artcard 221, decoding the read data to produce corresponding encoded XORed scrambled bitmap data 223. Next a checkerboard XOR is applied to the data to produces encoded scrambled data 224. This data is then unscrambled 227 to produce data 225 before this data is subjected to Reed-Solomon decoding to produce the original raw data 226. Alternatively, unscrambling and XOR process can take place together, not requiring a separate pass of the data. Each of the above steps is discussed in further detail hereinafter. As noted previously with reference to Fig. 37, the Artcard Interface, therefore, has 4 phases, the first 2 of which are time-critical, and must take place while pixel data is being read from the CCD:

Phase 1. Detect data area on Artcard

Phase 2. Detect bit pattern from Artcard based on CCD pixels, and write as bytes.

Phase 3. Descramble and XOR the byte-pattern

Phase 4. Decode data (Reed-Solomon decode)

The four phases are described in more detail as follows:

Phase 1. As the Artcard 9 moves past the CCD 34 the AI must detect the start of the data area by robustly detecting special targets on the Artcard to the left of the data area. If these cannot be detected, the card is marked as invalid. The detection must occur in real-time, while the Artcard 9 is moving past the CCD 34.

If necessary, rotation invariance can be provided. In this case, the targets are repeated on the right side of the Artcard, but relative to the bottom right corner instead of the top corner. In this way the targets end up in the correct orientation if the card is inserted the "wrong" way. Phase 3 below can be altered to detect the orientation of the data, and account for the potential rotation.

Phase 2. Once the data area has been determined, the main read process begins, placing pixel data from the CCD into an 'Artcard data window', detecting bits from this window, assembling the detected bits into bytes, and constructing a byte-image in DRAM. This must all be done while the Artcard is moving past the CCD.

Phase 3. Once all the pixels have been read from the Artcard data area, the Artcard motor 37 can be stopped, and the byte image descrambled and XORed. Although not requiring real-time performance, the process should be fast enough not to annoy the human operator. The process must take 2 MB of scrambled bit-image and write the unscrambled/XORed bit-image to a separate 2MB image.

Phase 4. The final phase in the Artcard read process is the Reed-Solomon decoding process, where the 2MB bit-image is decoded into a 1MB valid Artcard data area. Again, while not requiring real-time performance it is still necessary to decode quickly with regard to the human operator. If the decode process is valid, the card is marked as valid. If the decode failed, any duplicates of data in the bit-image are attempted to be decoded, a process that is repeated until success or until there are no more duplicate images of the data in the bit image.

The four phase process described requires 4.5 MB of DRAM. 2MB is reserved for Phase 2 output, and 0.5MB is reserved for scratch data during phases 1 and 2. The remaining 2MB of space can hold over 440 columns at 4725

byes per column. In practice, the pixel data being read is a few columns ahead of the phase 1 algorithm, and in the worst case, about 180 columns behind phase 2, comfortably inside the 440 column limit.

A description of the actual operation of each phase will now be provided in greater detail.

Phase 1 – Detect data area on Artcard

This phase is concerned with robustly detecting the left-hand side of the data area on the Artcard 9. Accurate detection of the data area is achieved by accurate detection of special targets printed on the left side of the card. These targets are especially designed to be easy to detect even if rotated up to 1 degree.

Turning to Fig. 38, there is shown an enlargement of the left hand side of an Artcard 9. The side of the card is divided into 16 bands, 239 with a target eg. 241 located at the center of each band. The bands are logical in that there is no line drawn to separate bands. Turning to Fig. 39, there is shown a single target 241. The target 241, is a printed black square containing a single white dot. The idea is to detect firstly as many targets 241 as possible, and then to join at least 8 of the detected white-dot locations into a single logical straight line. If this can be done, the start of the data area 243 is a fixed distance from this logical line. If it cannot be done, then the card is rejected as invalid.

As shown in Fig. 38, the height of the card 9 is 3150 dots. A target (Target0) 241 is placed a fixed distance of 24 dots away from the top left corner 244 of the data area so that it falls well within the first of 16 equal sized regions 239 of 192 dots (576 pixels) with no target in the final pixel region of the card. The target 241 must be big enough to be easy to detect, yet be small enough not to go outside the height of the region if the card is rotated 1 degree. A suitable size for the target is a 31 x 31 dot (93 x 93 sensed pixels) black square 241 with the white dot 242.

At the worst rotation of 1 degree, a 1 column shift occurs every 57 pixels. Therefore in a 590 pixel sized band, we cannot place any part of our symbol in the top or bottom 12 pixels or so of the band or they could be detected in the wrong band at CCD read time if the card is worst case rotated.

Therefore, if the black part of the rectangle is 57 pixels high (19 dots) we can be sure that at least 9.5 black pixels will be read in the same column by the CCD (worst case is half the pixels are in one column and half in the next). To be sure of reading at least 10 black dots in the same column, we must have a height of 20 dots. To give room for erroneous detection on the edge of the start of the black dots, we increase the number of dots to 31, giving us 15 on either side of the white dot at the target's local coordinate (15, 15). 31 dots is 91 pixels, which at most suffers a 3 pixel shift in column, easily within the 576 pixel band.

Thus each target is a block of 31 x 31 dots (93 x 93 pixels) each with the composition:

15 columns of 31 black dots each (45 pixel width columns of 93 pixels).

1 column of 15 black dots (45 pixels) followed by 1 white dot (3 pixels) and then a further 15 black dots (45 pixels)

15 columns of 31 black dots each (45 pixel width columns of 93 pixels)

Detect targets

Targets are detected by reading columns of pixels, one column at a time rather than by detecting dots. It is necessary to look within a given band for a number of columns consisting of large numbers of contiguous black pixels to build up the left side of a target. Next, it is expected to see a white region in the center of further black columns, and finally the black columns to the left of the target center.

Eight cache lines are required for good cache performance on the reading of the pixels. Each logical read fills 4 cache lines via 4 sub-reads while the other 4 cache-lines are being used. This effectively uses up 13% of the available

DRAM bandwidth.

As illustrated in Fig. 40, the detection mechanism FIFO for detecting the targets uses a filter 245, run-length encoder 246, and a FIFO 247 that requires special wiring of the top 3 elements (S1, S2, and S3) for random access.

The columns of input pixels are processed one at a time until either all the targets are found, or until a specified number of columns have been processed. To process a column, the pixels are read from DRAM, passed through a filter 245 to detect a 0 or 1, and then run length encoded 246. The bit value and the number of contiguous bits of the same value are placed in FIFO 247. Each entry of the FIFO 249 is in 8 bits, 7 bits 250 to hold the run-length, and 1 bit 249 to hold the value of the bit detected.

The run-length encoder 246 only encodes contiguous pixels within a 576 pixel (192 dot) region.

The top 3 elements in the FIFO 247 can be accessed 252 in any random order. The run lengths (in pixels) of these entries are filtered into 3 values: *short*, *medium*, and *long* in accordance with the following table:

Short	Used to detect white dot.	RunLength < 16
Medium	Used to detect runs of black above or below the white dot in the center of the target.	16<= RunLength < 48
Long	Used to detect run lengths of black to the left and right of the center dot in the target.	RunLength >= 48

Looking at the top three entries in the FIFO 247 there are 3 specific cases of interest:

Case 1	S1 = white long S2 = black long S3 = white medium/long	We have detected a black column of the target to the left of or to the right of the white center dot.
Case 2	S1 = white long S2 = black medium S3 = white short Previous 8 columns were Case 1	If we've been processing a series of columns of Case 1s, then we have probably detected the white dot in this column. We know that the next entry will be black (or it would have been included in the white S3 entry), but the number of black pixels is in question. Need to verify by checking after the next FIFO advance (see Case 3).
Case 3	Prev = Case 2 S3 = black med	We have detected part of the white dot. We expect around 3 of these, and then some more columns of Case 1.

Preferably, the following information per region band is kept:

TargetDetected	1 bit
BlackDetectCount	4 bits
WhiteDetectCount	3 bits
PrevColumnStartPixel	15 bits
TargetColumn ordinate	16 bits (15:1)
TargetRow ordinate	16 bits (15:1)
TOTAL	7 bytes (rounded to 8 bytes for easy addressing)

Given a total of 7 bytes. It makes address generation easier if the total is assumed to be 8 bytes. Thus 16 entries requires 16 * 8 = 128 bytes, which fits in 4 cache lines. The address range should be inside the scratch 0.5MB DRAM area since other phases make use of the remaining 4MB data area.

When beginning to process a given pixel column, the register value S2StartPixel 254 is reset to 0. As entries in the FIFO advance from S2 to S1, they are also added 255 to the existing S2StartPixel value, giving the exact pixel position of the run currently defined in S2. Looking at each of the 3 cases of interest in the FIFO, S2StartPixel can be used to determine the start of the black area of a target (Cases 1 and 2), and also the start of the white dot in the center of the target (Case 3). An algorithm for processing columns can be as follows:

1	TargetDetected[0-15] := 0 BlackDetectCount[0-15] := 0 WhiteDetectCount[0-15] := 0 TargetRow[0-15] := 0 TargetColumn[0-15] := 0 PrevColStartPixel[0-15] := 0 CurrentColumn := 0
2	Do ProcessColumn
3	CurrentColumn++
4	If (CurrentColumn <= LastValidColumn) Goto 2

The steps involved in the processing a column (Process Column) are as follows:

1	S2StartPixel := 0 FIFO := 0 BlackDetectCount := 0 WhiteDetectCount := 0 ThisColumnDetected := FALSE PrevCaseWasCase2 := FALSE

2	If (! TargetDetected[Target]) & (! ColumnDetected[Target])
	ProcessCases
	EndIf

3	PrevCaseWasCase2 := Case=2
4	Advance FIFO

The processing for each of the 3 (Process Cases) cases is as follows:

Case 1:

BlackDetectCount[target] < 8
OR
WhiteDetectCount[Target] = 0
	• := ABS(S2StartPixel – PrevColStartPixel[Target])
	If (0<=• < 2)
	BlackDetectCount[Target]++ (max value =8)
	Else
	BlackDetectCount[Target] := 1
	WhiteDetectCount[Target] := 0
	EndIf
	PrevColStartPixel[Target] := S2StartPixel
	ColumnDetected[Target] := TRUE
	BitDetected = 1

BlackDetectCount[target] >= 8 WhiteDetectCount[Target] != 0	PrevColStartPixel[Target] := S2StartPixel ColumnDetected[Target] := TRUE BitDetected = 1 TargetDetected[Target] := TRUE TargetColumn[Target] := CurrentColumn – 8 – (WhiteDetectCount[Target]/2)

Case 2:

No special processing is recorded except for setting the 'PrevCaseWasCase2' flag for identifying Case 3 (see Step 3 of processing a column described above)

Case 3:

PrevCaseWasCase2 = TRUE
BlackDetectCount[Target] >= 8
WhiteDetectCount=1
	If (WhiteDetectCount[Target] < 2)
	TargetRow[Target] = S2StartPixel + ($S2_{RunLength}$/2)
	EndIf
	• := ABS(S2StartPixel – PrevColStartPixel[Target])
	If (0<=• < 2)
	WhiteDetectCount[Target]++
	Else
	WhiteDetectCount[Target] := 1
	EndIf
	PrevColStartPixel[Target] := S2StartPixel
	ThisColumnDetected := TRUE
	BitDetected = 0

At the end of processing a given column, a comparison is made of the current column to the maximum number of columns for target detection. If the number of columns allowed has been exceeded, then it is necessary to check how many targets have been found. If fewer than 8 have been found, the card is considered invalid.

Process targets

After the targets have been detected, they should be processed. All the targets may be available or merely some of them. Some targets may also have been erroneously detected.

This phase of processing is to determine a mathematical line that passes through the center of as many targets as possible. The more targets that the line passes through, the more confident the target position has been found. The limit is set to be 8 targets. If a line passes through at least 8 targets, then it is taken to be the right one.

It is all right to take a brute-force but straightforward approach since there is the time to do so (see below), and lowering complexity makes testing easier. It is necessary to determine the line between targets 0 and 1 (if both targets are considered valid) and then determine how many targets fall on this line. Then we determine the line between targets 0 and 2, and repeat the process. Eventually we do the same for the line between targets 1 and 2, 1 and 3 etc. and finally for the line between targets 14 and 15. Assuming all the targets have been found, we need to perform 15+14+13+ ...= 90 sets of calculations (with each set of calculations requiring 16 tests = 1440 actual calculations), and choose the line which has the maximum number of targets found along the line. The algorithm for target location can be as follows:

```
TargetA := 0
MaxFound := 0
BestLine := 0
While (TargetA < 15)
        If (TargetA is Valid)
        TargetB:= TargetA + 1
```

```
While (TargetB<= 15)
If (TargetB is valid)
CurrentLine := line between TargetA and TargetB
TargetC := 0;
While (TargetC <= 15)
        If (TargetC valid AND TargetC on line AB)
                TargetsHit++
                EndIf
                If (TargetsHit > MaxFound)
                        MaxFound := TargetsHit
                        BestLine := CurrentLine
                EndIf
                TargetC++
        EndWhile
                EndIf
    TargetB ++
        EndWhile
    EndIf
    TargetA++
EndWhile

If (MaxFound < 8)
        Card is Invalid
Else
        Store expected centroids for rows based on BestLine
EndIf
```

As illustrated in Fig. 34, in the algorithm above, to determine a CurrentLine 260 from Target A 261 and target B, it is necessary to calculate Δrow (264) & Δcolumn (263) between targets 261, 262, and the location of Target A. It is then possible to move from Target 0 to Target 1 etc. by adding Δrow and Δcolumn. The found (if actually found) location of target N can be compared to the calculated expected position of Target N on the line, and if it falls within the tolerance, then Target N is determined to be on the line.

To calculate Δrow & Δcolumn:

$\Delta row = (row_{TargetA} - row_{TargetB})/(B-A)$

$\Delta column = (column_{TargetA} - column_{TargetB})/(B-A)$

Then we calculate the position of Target0:

row = rowTargetA – (A * Δrow)

column = columnTargetA – (A * Δcolumn)

And compare (row, column) against the actual $row_{Target0}$ and $column_{Target0}$. To move from one expected target

to the next (e.g. from Target0 to Target1), we simply add Δrow and Δcolumn to row and column respectively. To check if each target is on the line, we must calculate the expected position of Target0, and then perform one add and one comparison for each target ordinate.

At the end of comparing all 16 targets against a maximum of 90 lines, the result is the best line through the valid targets. If that line passes through at least 8 targets (i.e. MaxFound >= 8), it can be said that enough targets have been found to form a line, and thus the card can be processed. If the best line passes through fewer than 8, then the card is considered invalid.

The resulting algorithm takes 180 divides to calculate Δrow and Δcolumn, 180 multiply/adds to calculate target0 position, and then 2880 adds/comparisons. The time we have to perform this processing is the time taken to read 36 columns of pixel data = 3,374,892ns. Not even accounting for the fact that an add takes less time than a divide, it is necessary to perform 3240 mathematical operations in 3,374,892ns. That gives approximately 1040ns per operation, or 104 cycles. The CPU can therefore safely perform the entire processing of targets, reducing complexity of design.

Update centroids based on data edge border and clockmarks

Step 0: Locate the data area

From Target 0 (241 of Fig. 38) it is a predetermined fixed distance in rows and columns to the top left border 244 of the data area, and then a further 1 dot column to the vertical clock marks 276. So we use TargetA, Δrow and Δcolumn found in the previous stage (Δrow and Δcolumn refer to distances between targets) to calculate the centroid or expected location for Target0 as described previously.

Since the fixed pixel offset from Target0 to the data area is related to the distance between targets (192 dots between targets, and 24 dots between Target0 and the data area 243), simply add Δrow/8 to Target0's centroid column coordinate (aspect ratio of dots is 1:1). Thus the top co-ordinate can be defined as:

$(column_{DotColumnTop} = column_{Target0} + (\Delta row/8)$

$(row_{DotColumnTop} = row_{Target}0 + (\Delta column /8)$

Next Δrow and Δcolumn are updated to give the number of pixels between dots in a single column (instead of between targets) by dividing them by the number of dots between targets:

$\Delta row = \Delta row/192$

$\Delta column = \Delta column /192$

We also set the currentColumn register (see Phase 2) to be –1 so that after step 2, when phase 2 begins, the currentColumn register will increment from –1 to 0.

Step 1: Write out the initial centroid deltas (Δ) and bit history

This simply involves writing setup information required for Phase 2.

This can be achieved by writing 0s to all the Δrow and Δcolumn entries for each row, and a bit history. The bit history is actually an expected bit history since it is known that to the left of the clock mark column 276 is a border column 277, and before that, a white area. The bit history therefore is 011, 010, 011, 010 etc.

Step 2: Update the centroids based on actual pixels read.

The bit history is set up in Step 1 according to the expected clock marks and data border. The actual centroids for each dot row can now be more accurately set (they were initially 0) by comparing the expected data against the

actual pixel values. The centroid updating mechanism is achieved by simply performing step 3 of Phase 2.

Phase 2 – Detect bit pattern from Artcard based on pixels read, and write as bytes.

Since a dot from the Artcard 9 requires a minimum of 9 sensed pixels over 3 columns to be represented, there is little point in performing dot detection calculations every sensed pixel column. It is better to average the time required for processing over the average dot occurrence, and thus make the most of the available processing time. This allows processing of a column of dots from an Artcard 9 in the time it takes to read 3 columns of data from the Artcard. Although the most likely case is that it takes 4 columns to represent a dot, the 4th column will be the last column of one dot and the first column of a next dot. Processing should therefore be limited to only 3 columns.

As the pixels from the CCD are written to the DRAM in 13% of the time available, 83% of the time is available for processing of 1 column of dots i.e. 83% of (93,747*3) = 83% of 281,241ns = 233,430ns.

In the available time, it is necessary to detect 3150 dots, and write their bit values into the raw data area of memory. The processing therefore requires the following steps:

For each column of dots on the Artcard:

Step 0: Advance to the next dot column

Step 1: Detect the top and bottom of an Artcard dot column (check clock marks)

Step 2: Process the dot column, detecting bits and storing them appropriately

Step 3: Update the centroids

Since we are processing the Artcard's logical dot columns, and these may shift over 165 pixels, the worst case is that we cannot process the first column until at least 165 columns have been read into DRAM. Phase 2 would therefore finish the same amount of time after the read process had terminated. The worst case time is: 165 * 93,747ns = 15,468,255ns or 0.015 seconds.

Step 0: Advance to the next dot column

In order to advance to the next column of dots we add Δrow and Δcolumn to the dotColumnTop to give us the centroid of the dot at the top of the column. The first time we do this, we are currently at the clock marks column 276 to the left of the bit image data area, and so we advance to the first column of data. Since Δrow and Δcolumn refer to distance between dots within a column, to move between dot columns it is necessary to add Δrow to $column_{dotColumnTop}$ and Δcolumn to $row_{dotColumnTop}$.

To keep track of what column number is being processed, the column number is recorded in a register called CurrentColumn. Every time the sensor advances to the next dot column it is necessary to increment the CurrentColumn register. The first time it is incremented, it is incremented from –1 to 0 (see Step 0 Phase 1). The CurrentColumn register determines when to terminate the read process (when reaching maxColumns), and also is used to advance the DataOut Pointer to the next column of byte information once all 8 bits have been written to the byte (once every 8 dot columns). The lower 3 bits determine what bit we're up to within the current byte. It will be the same bit being written for the whole column.

Step 1: Detect the top and bottom of an Artcard dot column.

In order to process a dot column from an Artcard, it is necessary to detect the top and bottom of a column. The column should form a straight line between the top and bottom of the column (except for local warping etc.). Initially dotColumnTop points to the clock mark column 276. We simply toggle the expected value, write it out into

the bit history, and move on to step 2, whose first task will be to add the Δrow and Δcolumn values to dotColumnTop to arrive at the first data dot of the column.

Step 2: Process an Artcard's dot column

Given the centroids of the top and bottom of a column in pixel coordinates the column should form a straight line between them, with possible minor variances due to warping etc.

Assuming the processing is to start at the top of a column (at the top centroid coordinate) and move down to the bottom of the column, subsequent expected dot centroids are given as:

$row_{next} = row + \Delta row$

$column_{next} = column + \Delta column$

This gives us the address of the expected centroid for the next dot of the column. However to account for *local* warping and error we add another Δrow and Δcolumn based on the last time we found the dot in a given row. In this way we can account for small drifts that accumulate into a maximum drift of some percentage from the straight line joining the top of the column to the bottom.

We therefore keep 2 values for each row, but store them in separate tables since the row history is used in step 3 of this phase.

* Δrow and Δcolumn (2 @ 4 bits each = 1 byte)

* row history (3 bits per row, 2 rows are stored per byte)

For each row we need to read a Δrow and Δcolumn to determine the change to the centroid. The read process takes 5% of the bandwidth and 2 cache lines:

76*(3150/32) + 2*3150 = 13,824ns = 5% of bandwidth

Once the centroid has been determined, the pixels around the centroid need to be examined to detect the status of the dot and hence the value of the bit. In the worst case a dot covers a 4x4 pixel area. However, thanks to the fact that we are sampling at 3 times the resolution of the dot, the number of pixels required to detect the status of the dot and hence the bit value is much less than this. We only require access to 3 columns of pixel columns at any one time.

In the worst case of pixel drift due to a 1% rotation, centroids will shift 1 column every 57 pixel rows, but since a dot is 3 pixels in diameter, a given column will be valid for 171 pixel rows (3*57). As a byte contains 2 pixels, the number of bytes valid in each buffered read (4 cache lines) will be a worst case of 86 (out of 128 read).

Once the bit has been detected it must be written out to DRAM. We store the bits from 8 columns as a set of contiguous bytes to minimize DRAM delay. Since all the bits from a given dot column will correspond to the next bit position in a data byte, we can read the old value for the byte, shift and OR in the new bit, and write the byte back.

The read / shift&OR / write process requires 2 cache lines.

We need to read and write the bit history for the given row as we update it. We only require 3 bits of history per row, allowing the storage of 2 rows of history in a single byte. The read / shift&OR / write process requires 2 cache lines.

The total bandwidth required for the bit detection and storage is summarised in the following table:

Read centroid Δ	5%
Read 3 columns of pixel data	19%
Read/Write detected bits into byte buffer	10%
Read/Write bit history	5%
TOTAL	39%

Detecting a dot

The process of detecting the value of a dot (and hence the value of a bit) given a centroid is accomplished by examining 3 pixel values and getting the result from a lookup table. The process is fairly simple and is illustrated in Fig. 42. A dot 290 has a radius of about 1.5 pixels. Therefore the pixel 291 that holds the centroid; regardless of the actual position of the centroid within that pixel, should be 100% of the dot's value. If the centroid is exactly in the center of the pixel 291, then the pixels above 292 & below 293 the centroid's pixel, as well as the pixels to the left 294 & right 295 of the centroid's pixel will contain a majority of the dot's value. The further a centroid is away from the exact center of the pixel 295, the more likely that more than the center pixel will have 100% coverage by the dot.

Although Fig. 42 only shows centroids differing to the left and below the center, the same relationship obviously holds for centroids above and to the right of center. center. In Case 1, the centroid is exactly in the center of the middle pixel 295. The center pixel 295 is completely covered by the dot, and the pixels above, below, left, and right are also well covered by the dot. In Case 2, the centroid is to the left of the center of the middle pixel 291. The center pixel is still completely covered by the dot, and the pixel 294 to the left of the center is now completely covered by the dot. The pixels above 292 and below 293 are still well covered. In Case 3, the centroid is below the center of the middle pixel 291. The center pixel 291 is still completely covered by the dot 291, and the pixel below center is now completely covered by the dot. The pixels left 294 and right 295 of center are still well covered. In Case 4, the centroid is left and below the center of the middle pixel. The center pixel 291 is still completely covered by the dot, and both the pixel to the left of center 294 and the pixel below center 293 are completely covered by the dot.

The algorithm for updating the centroid uses the distance of the centroid from the center of the middle pixel 291 in order to select 3 representative pixels and thus decide the value of the dot:

Pixel 1: the pixel containing the centroid

Pixel 2: the pixel to the left of Pixel 1 if the centroid's X coordinate (column value) is < ½, otherwise the pixel to the right of Pixel 1.

Pixel 3: the pixel above pixel 1 if the centroid's Y coordinate (row value) is < ½, otherwise the pixel below Pixel 1.

As shown in Fig. 43, the value of each pixel is output to a pre-calculated lookup table 301. The 3 pixels are fed into a 12-bit lookup table, which outputs a single bit indicating the value of the dot – on or off. The lookup table 301 is constructed at chip definition time, and can be compiled into about 500 gates. The lookup table can be a simple threshold table, with the exception that the center pixel (Pixel 1) is weighted more heavily.

Step 3: Update the centroid Δs for each row in the column

The idea of the Δs processing is to use the previous bit history to generate a 'perfect' dot at the expected centroid location for each row in a current column. The actual pixels (from the CCD) are compared with the expected 'perfect' pixels. If the two match, then the actual centroid location must be exactly in the expected position, so the centroid Δs must be valid and not need updating. Otherwise a process of changing the centroid Δs needs to occur in order to best fit the expected centroid location to the actual data. The new centroid Δs will be used for processing the dot in the next column.

Updating the centroid Δs is done as a subsequent process from Step 2 for the following reasons:

to reduce complexity in design, so that it can be performed as Step 2 of Phase 1 there is enough bandwidth remaining to allow it to allow reuse of DRAM buffers, and

to ensure that all the data required for centroid updating is available at the start of the process without special pipelining.

The centroid Δ are processed as Δcolumn Δrow respectively to reduce complexity.

Although a given dot is 3 pixels in diameter, it is likely to occur in a 4x4 pixel area. However the edge of one dot will as a result be in the same pixel as the edge of the next dot. For this reason, centroid updating requires more than simply the information about a given single dot.

Fig. 44 shows a single dot 310 from the previous column with a given centroid 311. In this example, the dot 310 extend Δ over 4 pixel columns 312-315 and in fact, part of the previous dot column's dot (coordinate = (Prevcolumn, Current Row)) has entered the current column for the dot on the current row. If the dot in the current row and column was white, we would expect the rightmost pixel column 314 from the previous dot column to be a low value, since there is only the dot information from the previous column's dot (the current column's dot is white). From this we can see that the higher the pixel value is in this pixel column 315, the more the centroid should be to the right Of course, if the dot to the right was also black, we cannot adjust the centroid as we cannot get information sub-pixel. The same can be said for the dots to the left, above and below the dot at dot coordinates (PrevColumn, CurrentRow).

From this we can say that a maximum of 5 pixel columns and rows are required. It is possible to simplify the situation by taking the cases of row and column centroid Δs separately, treating them as the same problem, only rotated 90 degrees.

Taking the horizontal case first, it is necessary to change the column centroid Δs if the expected pixels don't match the detected pixels. From the bit history, the value of the bits found for the Current Row in the current dot column, the previous dot column, and the (previous-1)th dot column are known. The expected centroid location is also known. Using these two pieces of information, it is possible to generate a 20 bit expected bit pattern should the read be 'perfect'. The 20 bit bit-pattern represents the expected Δ values for each of the 5 pixels across the horizontal dimension. The first nibble would represent the rightmost pixel of the leftmost dot. The next 3 nibbles represent the 3 pixels across the center of the dot 310 from the previous column, and the last nibble would be the leftmost pixel 317 of the rightmost dot (from the current column).

If the expected centroid is in the center of the pixel, we would expect a 20 bit pattern based on the following table:

Bit history	Expected pixels
000	00000
001	0000D
010	0DFD0
011	0DFDD
100	D0000
101	D000D
110	DDFD0
111	DDFDD

The pixels to the left and right of the center dot are either 0 or D depending on whether the bit was a 0 or 1 respectively. The center three pixels are either 000 or DFD depending on whether the bit was a 0 or 1 respectively. These values are based on the physical area taken by a dot for a given pixel. Depending on the distance of the centroid from the exact center of the pixel, we would expect data shifted slightly, which really only affects the pixels either side of the center pixel. Since there are 16 possibilities, it is possible to divide the distance from the center by 16 and use that amount to shift the expected pixels.

Once the 20 bit 5 pixel expected value has been determined it can be compared against the actual pixels read. This can proceed by subtracting the expected pixels from the actual pixels read on a pixel by pixel basis, and finally adding the differences together to obtain a distance from the expected Δ values.

Fig. 45 illustrates one form of implementation of the above algorithm which includes a look up table 320 which receives the bit history 322 and central fractional component 323 and outputs 324 the corresponding 20 bit number which is subtracted 321 from the central pixel input 326 to produce a pixel difference 327.

This process is carried out for the expected centroid and once for a shift of the centroid left and right by 1 amount in Δcolumn. The centroid with the smallest difference from the actual pixels is considered to be the 'winner' and the Δcolumn updated accordingly (which hopefully is 'no change'). As a result, a Δcolumn cannot change by more than 1 each dot column.

The process is repeated for the vertical pixels, and Δrow is consequentially updated.

There is a large amount of scope here for parallelism. Depending on the rate of the clock chosen for the ACP unit 31 these units can be placed in series (and thus the testing of 3 different Δ could occur in consecutive clock cycles), or in parallel where all 3 can be tested simultaneously. If the clock rate is fast enough, there is less need for parallelism.

Bandwidth utilization

It is necessary to read the old Δ of the Δs, and to write them out again. This takes 10% of the bandwidth:

2 * (76(3150/32) + 2*3150) = 27,648ns = 10% of bandwidth

It is necessary to read the bit history for the given row as we update its Δs. Each byte contains 2 row's bit histories, thus taking 2.5% of the bandwidth:

76((3150/2)/32) + 2*(3150/2) = 4,085ns = 2.5% of bandwidth

In the worst case of pixel drift due to a 1% rotation, centroids will shift 1 column every 57 pixel rows, but since a dot is 3 pixels in diameter, a given pixel column will be valid for 171 pixel rows (3*57). As a byte contains 2 pixels, the number of bytes valid in cached reads will be a worst case of 86 (out of 128 read). The worst case timing for 5 columns is therefore 31% bandwidth.

5 *(((9450/(128 * 2)) * 320) * 128/86) = 88, 112ns = 31% of bandwidth.

The total bandwidth required for the updating the centroid Δ is summarised in the following table:

Read/Write centroid Δ	10%
Read bit history	2.5%
Read 5 columns of pixel data	31%
TOTAL	43.5%

Memory usage for Phase 2:

The 2MB bit-image DRAM area is read from and written to during Phase 2 processing. The 2MB pixel-data DRAM area is read.

The 0.5MB scratch DRAM area is used for storing row data, namely:

Centroid array	24bits (16:8) * 2 * 3150 = 18,900 byes
Bit History array	3 bits * 3150 entries (2 per byte) = 1575 bytes

Phase 3 –Unscramble and XOR the raw data

Returning to Fig. 37, the next step in decoding is to unscramble and XOR the raw data. The 2MB byte image, as taken from the Artcard, is in a scrambled XORed form. It must be unscrambled and re-XORed to retrieve the bit image necessary for the Reed Solomon decoder in phase 4.

Turning to Fig. 46, the unscrambling process 330 takes a 2MB scrambled byte image 331 and writes an unscrambled 2MB image 332. The process cannot reasonably be performed in-place, so 2 sets of 2MB areas are utilised. The scrambled data 331 is in symbol block order arranged in a 16x16 array, with symbol block 0 (334) having all the symbol 0's from all the code words in random order. Symbol block 1 has all the symbol 1's from all the code words in random order etc. Since there are only 255 symbols, the 256th symbol block is currently unused.

A linear feedback shift register is used to determine the relationship between the position within a symbol block eg. 334 and what code word eg. 355 it came from. This works as long as the same seed is used when generating the original Artcard images. The XOR of bytes from alternative source lines with 0xAA and 0x55 respectively is effectively free (in time) since the bottleneck of time is waiting for the DRAM to be ready to read/write to non-sequential addresses.

The timing of the unscrambling XOR process is effectively 2MB of random byte-reads, and 2MB of random byte-writes i.e. 2 * (2MB * 76ns + 2MB * 2ns) = 327,155,712ns or approximately 0.33 seconds. This timing assumes

no caching.

Phase 4 - Reed Solomon decode

This phase is a loop, iterating through copies of the data in the bit image, passing them to the Reed-Solomon decode module until either a successful decode is made or until there are no more copies to attempt decode from.

The Reed-Solomon decoder used can be the VLIW processor, suitably programmed or, alternatively, a separate hardwired core such as LSI Logic's L64712. The L64712 has a throughput of 50Mbits per second (around 6.25MB per second), so the time may be bound by the speed of the Reed-Solomon decoder rather than the 2MB read and 1 MB write memory access time (500MB/sec for sequential accesses). The time taken in the worst case is thus 2/6.25s = approximately 0.32 seconds.

Phase 5 Running the Vark script

The overall time taken to read the Artcard 9 and decode it is therefore approximately 2.15 seconds. The apparent delay to the user is actually only 0.65 seconds (the total of Phases 3 and 4), since the Artcard stops moving after 1.5 seconds.

Once the Artcard is loaded, the Artvark script must be interpreted, Rather than run the script immediately, the script is only run upon the pressing of the 'Print' button 13 (Fig. 1). The taken to run the script will vary depending on the complexity of the script, and must be taken into account for the perceived delay between pressing the print button and the actual print button and the actual printing.

Alternative Artcard Fomat

Of course, other artcard formats are possible. There will now be described one such alternative artcard format with a number of preferable feature. Described hereinafter will be the alternative Artcard data format, a mechanism for mapping user data onto dots on an alternative Artcard, and a fast alternative Artcard reading algorithm for use in embedded systems where resources are scarce.

Alternative Artcard Overview

The Alternative Artcards can be used in both embedded and PC type applications, providing a user-friendly interface to large amounts of data or configuration information.

While the back side of an alternative Artcard has the same visual appearance regardless of the application (since it stores the data), the front of an alternative Artcard can be application dependent. It must make sense to the user in the context of the application.

Alternative Artcard technology can also be independent of the printing resolution. The notion of storing data as dots on a card simply means that if it is possible put more dots in the same space (by increasing resolution), then those dots can represent more data. The preferred embodiment assumes utilisation of 1600 dpi printing on a 86 mm x 55 mm card as the sample Artcard, but it is simple to determine alternative equivalent layouts and data sizes for other card sizes and/or other print resolutions. Regardless of the print resolution, the reading technique remain the same. After all decoding and other overhead has been taken into account, alternative Artcards are capable of storing up to 1 Megabyte of data at print resolutions up to 1600 dpi. Alternative Artcards can store megabytes of data at print resolutions greater than 1600 dpi. The following two tables summarize the effective alternative Artcard data storage capacity for certain print resolutions:

Format of an alternative Artcard

The structure of data on the alternative Artcard is therefore specifically designed to aid the recovery of data. This section describes the format of the data (back) side of an alternative Artcard.

Dots

The dots on the data side of an alternative Artcard can be monochrome. For example, black dots printed on a white background at a predetermined desired print resolution. Consequently a "black dot" is physically different from a "white dot". Fig. 47 illustrates various examples of magnified views of black and white dots. The monochromatic scheme of black dots on a white background is preferably chosen to maximize dynamic range in blurry reading environments. Although the black dots are printed at a particular pitch (eg. 1600 dpi), the dots themselves are slightly larger in order to create continuous lines when dots are printed contiguously. In the example images of Fig. 47, the dots are not as merged as they may be in reality as a result of bleeding. There would be more smoothing out of the black indentations. Although the alternative Artcard system described in the preferred embodiment allows for flexibly different dot sizes, exact dot sizes and ink/printing behaviour for a particular printing technology should be studied in more detail in order to obtain best results.

In describing this artcard embodiment, the term *dot* refers to a physical printed dot (ink, thermal, electro-photographic, silver-halide etc) on an alternative Artcard. When an alternative Artcard reader scans an alternative Artcard, the dots must be sampled at least double the printed resolution to satisfy Nyquist's Theorem. The term pixel refers to a sample value from an alternative Artcard reader device. For example, when 1600 dpi dots are scanned at 4800 dpi there are 3 pixels in each dimension of a dot, or 9 pixels per dot. The sampling process will be further explained hereinafter.

Turning to Fig. 48, there is shown the data surface 1101 a sample of alternative Artcard. Each alternative Artcard consists of an "active" region 1102 surrounded by a white border region 1103. The white border 1103 contains no data information, but can be used by an alternative Artcard reader to calibrate white levels. The active region is an array of data blocks eg. 1104, with each data block separated from the next by a gap of 8 white dots eg. 1106. Depending on the print resolution, the number of data blocks on an alternative Artcard will vary. On a 1600 dpi alternative Artcard, the array can be 8 x 8. Each data block 1104 has dimensions of 627 x 394 dots. With an inter-block gap 1106 of 8 white dots, the active area of an alternative Artcard is therefore 5072 x 3208 dots (8.1mm x 5.1mm at 1600 dpi).

Data blocks

Turning now to Fig. 49, there is shown a single data block 1107. The active region of an alternative Artcard consists of an array of identically structured data blocks 1107. Each of the data blocks has the following structure: a data region 1108 surrounded by clock-marks 1109, borders 1110, and targets 1111. The data region holds the encoded data proper, while the clock-marks, borders and targets are present specifically to help locate the data region and ensure accurate recovery of data from within the region.

Each data block 1107 has dimensions of 627 x 394 dots. Of this, the central area of 595 x 384 dots is the data region 1108. The surrounding dots are used to hold the clock-marks, borders, and targets.

Borders and Clockmarks

Fig. 50 illustrates a data block with Fig. 51 and Fig. 52 illustrating magnified edge portions thereof. As illustrated in Fig. 51 and Fig. 52, there are two 5 dot high border and clockmark regions 1170, 1177 in each data block:

one above and one below the data region. For example, The top 5 dot high region consists of an outer black dot border line 1112 (which stretches the length of the data block), a white dot separator line 1113 (to ensure the border line is independent), and a 3 dot high set of clock marks 1114. The clock marks alternate between a white and black row, starting with a black clock mark at the 8th column from either end of the data block. There is no separation between clockmark dots and dots in the data region.

The clock marks are symmetric in that if the alternative Artcard is inserted rotated 180 degrees, the same relative border/clockmark regions will be encountered. The border 1112, 1113 is intended for use by an alternative Artcard reader to keep vertical tracking as data is read from the data region. The clockmarks 1114 are intended to keep horizontal tracking as data is read from the data region. The separation between the border and clockmarks by a white line of dots is desirable as a result of blurring occurring during reading. The border thus becomes a black line with white on either side, making for a good frequency response on reading. The clockmarks alternating between white and black have a similar result, except in the horizontal rather than the vertical dimension. Any alternative Artcard reader must locate the clockmarks and border if it intends to use them for tracking. The next section deals with targets, which are designed to point the way to the clockmarks, border and data.

Targets in the Target region

As shown in Fig. 54, there are two 15-dot wide target regions 1116, 1117 in each data block: one to the left and one to the right of the data region. The target regions are separated from the data region by a single column of dots used for orientation. The purpose of the Target Regions 1116, 1117 is to point the way to the clockmarks, border and data regions. Each Target Region contains 6 targets eg. 1118 that are designed to be easy to find by an alternative Artcard reader. Turning now to Fig. 53 there is shown the structure of a single target 1120. Each target 1120 is a 15 x 15 dot black square with a center structure 1121 and a run-length encoded target number 1122. The center structure 1121 is a simple white cross, and the target number component 1122 is simply two columns of white dots, each being 2 dots long for each part of the target number. Thus target number 1's target id 1122 is 2 dots long, target number 2's target id 1122 is 4 dots wide etc.

As shown in Fig. 54, the targets are arranged so that they are rotation invariant with regards to card insertion. This means that the left targets and right targets are the same, except rotated 180 degrees. In the left Target Region 1116, the targets are arranged such that targets 1 to 6 are located top to bottom respectively. In the right Target Region, the targets are arranged so that target numbers 1 to 6 are located bottom to top. The target number id is always in the half closest to the data region. The magnified view portions of Fig. 54 reveals clearly the how the right targets are simply the same as the left targets, except rotated 180 degrees.

As shown in Fig. 55, the targets 1124, 1125 are specifically placed within the Target Region with centers 55 dots apart. In addition, there is a distance of 55 dots from the center of target 1 (1124) to the first clockmark dot 1126 in the upper clockmark region, and a distance of 55 dots from the center of the target to the first clockmark dot in the lower clockmark region (not shown). The first black clockmark in both regions begins directly in line with the target center (the 8th dot position is the center of the 15 dot-wide target).

The simplified schematic illustrations of Fig. 55 illustrates the distances between target centers as well as the distance from Target 1 (1124) to the first dot of the first black clockmark (1126) in the upper border/clockmark region. Since there is a distance of 55 dots to the clockmarks from both the upper and lower targets, and both sides of the alternative Artcard are symmetrical (rotated through 180 degrees), the card can be read left-to-right or right-to-left.

Regardless of reading direction, the orientation *does* need to be determined in order to extract the data from the data region.

Orientation columns

As illustrated in Fig. 56, there are two 1 dot wide Orientation Columns 1127, 1128 in each data block: one directly to the left and one directly to the right of the data region. The Orientation Columns are present to give orientation information to an alternative Artcard reader: On the left side of the data region (to the right of the Left Targets) is a single column of white dots 1127. On the right side of the data region (to the left of the Right Targets) is a single column of black dots 1128. Since the targets are rotation invariant, these two columns of dots allow an alternative Artcard reader to determine the orientation of the alternative Artcard – has the card been inserted the right way, or back to front. From the alternative Artcard reader's point of view, assuming no degradation to the dots, there are two possibilities:

* If the column of dots to the left of the data region is white, and the column to the right of the data region is black, then the reader will know that the card has been inserted the same way as it was written.

* If the column of dots to the left of the data region is black, and the column to the right of the data region is white, then the reader will know that the card has been inserted backwards, and the data region is appropriately rotated. The reader must take appropriate action to correctly recover the information from the alternative Artcard.

Data Region

As shown in Fig. 57, the data region of a data block consists of 595 columns of 384 dots each, for a total of 228,480 dots. These dots must be interpreted and decoded to yield the original data. Each dot represents a single bit, so the 228,480 dots represent 228,480 bits, or 28,560 bytes. The interpretation of each dot can be as follows:

Black	1
White	0

The actual interpretation of the bits derived from the dots, however, requires understanding of the mapping from the original data to the dots in the data regions of the alternative Artcard.

Mapping original data to data region dots

There will now be described the process of taking an original data file of maximum size 910,082 bytes and mapping it to the dots in the data regions of the 64 data blocks on a 1600 dpi alternative Artcard. An alternative Artcard reader would reverse the process in order to extract the original data from the dots on an alternative Artcard. At first glance it seems trivial to map data onto dots: binary data is comprised of 1s and 0s, so it would be possible to simply write black and white dots onto the card. This scheme however, does not allow for the fact that ink can fade, parts of a card may be damaged with dirt, grime, or even scratches. Without error-detection encoding, there is no way to detect if the data retrieved from the card is correct. And without redundancy encoding, there is no way to correct the detected errors. The aim of the mapping process then, is to make the data recovery highly robust, and also give the alternative Artcard reader the ability to know it read the data correctly.

There are three basic steps involved in mapping an original data file to data region dots:

* Redundancy encode the original data

* Shuffle the encoded data in a deterministic way to reduce the effect of localized alternative Artcard

damage

* Write out the shuffled, encoded data as dots to the data blocks on the alternative Artcard

Each of these steps is examined in detail in the following sections.

Redundancy encode using Reed-Solomon encoding

The mapping of data to alternative Artcard dots relies heavily on the method of redundancy encoding employed. Reed-Solomon encoding is preferably chosen for its ability to deal with burst errors and effectively detect and correct errors using a minimum of redundancy. Reed Solomon encoding is adequately discussed in the standard texts such as Wicker, S., and Bhargava, V., 1994, Reed-Solomon Codes and their Applications, IEEE Press. Rorabaugh, C, 1996, Error Coding Cookbook, McGraw-Hill. Lyppens, H., 1997, Reed-Solomon Error Correction, Dr. Dobb's Journal, January 1997 (Volume 22, Issue 1).

A variety of different parameters for Reed-Solomon encoding can be used, including different symbol sizes and different levels of redundancy. Preferably, the following encoding parameters are used:

* $m = 8$
* $t = 64$

Having m=8 means that the symbol size is 8 bits (1 byte). It also means that each Reed-Solomon encoded block size n is 255 bytes ($2^8 - 1$ symbols). In order to allow correction of up to t symbols, 2t symbols in the final block size must be taken up with redundancy symbols. Having t=64 means that 64 bytes (symbols) can be corrected per block if they are in error. Each 255 byte block therefore has 128 (2 x 64) redundancy bytes, and the remaining 127 bytes (k=127) are used to hold original data. Thus:

* $n = 255$
* $k = 127$

The practical result is that 127 bytes of original data are encoded to become a 255-byte block of Reed-Solomon encoded data. The encoded 255-byte blocks are stored on the alternative Artcard and later decoded back to the original 127 bytes again by the alternative Artcard reader. The 384 dots in a single column of a data block's data region can hold 48 bytes (384/8). 595 of these columns can hold 28,560 bytes. This amounts to 112 Reed-Solomon blocks (each block having 255 bytes). The 64 data blocks of a complete alternative Artcard can hold a total of 7168 Reed-Solomon blocks (1,827,840 bytes, at 255 bytes per Reed-Solomon block). Two of the 7,168 Reed-Solomon blocks are reserved for control information, but the remaining 7166 are used to store data. Since each Reed-Solomon block holds 127 bytes of actual data, the total amount of data that can be stored on an alternative Artcard is 910,082 bytes (7166 x 127). If the original data is less than this amount, the data can be encoded to fit an exact number of Reed-Solomon blocks, and then the encoded blocks can be replicated until all 7,166 are used. Fig. 58 illustrates the overall form of encoding utilised.

Each of the 2 Control blocks 1132, 1133 contain the same encoded information required for decoding the remaining 7,166 Reed-Solomon blocks:

The number of Reed-Solomon blocks in a full message (16 bits stored lo/hi), and

The number of data bytes in the last Reed-Solomon block of the message (8 bits)

These two numbers are repeated 32 times (consuming. 96 bytes) with the remaining 31 bytes reserved and set to 0. Each control block is then Reed-Solomon encoded, turning the 127 bytes of control information into 255 bytes of Reed-Solomon encoded data.

The Control Block is stored twice to give greater chance of it surviving. In addition, the repetition of the data within the Control Block has particular significance when using Reed-Solomon encoding. In an uncorrupted Reed-Solomon encoded block, the first 127 bytes of data are *exactly* the original data, and can be looked at in an attempt to recover the original message if the Control Block fails decoding (more than 64 symbols are corrupted). Thus, if a Control Block fails decoding, it is possible to examine sets of 3 bytes in an effort to determine the most likely values for the 2 decoding parameters. It is not guaranteed to be recoverable, but it has a better chance through redundancy. Say the last 159 bytes of the Control Block are destroyed, and the first 96 bytes are perfectly ok. Looking at the first 96 bytes will show a repeating set of numbers. These numbers can be sensibly used to decode the remainder of the message in the remaining 7,166 Reed-Solomon blocks.

By way of example, assume a data file containing exactly 9,967 bytes of data. The number of Reed-Solomon blocks required is 79. The first 78 Reed-Solomon blocks are completely utilized, consuming 9,906 bytes (78 x 127). The 79th block has only 61 bytes of data (with the remaining 66 bytes all 0s).

The alternative Artcard would consist of 7,168 Reed-Solomon blocks. The first 2 blocks would be Control Blocks, the next 79 would be the encoded data, the next 79 would be a duplicate of the encoded data, the next 79 would be another duplicate of the encoded data, and so on. After storing the 79 Reed-Solomon blocks 90 times, the remaining 56 Reed-Solomon blocks would be another duplicate of the first 56 blocks from the 79 blocks of encoded data (the final 23 blocks of encoded data would not be stored again as there is not enough room on the alternative Artcard). A hex representation of the 127 bytes in each Control Block data before being Reed-Solomon encoded would be as illustrated in Fig. 59.

Scramble the Encoded Data

Assuming all the encoded blocks have been stored contiguously in memory, a maximum 1,827,840 bytes of data can be stored on the alternative Artcard (2 Control Blocks and 7,166 information blocks, totalling 7,168 Reed-Solomon encoded blocks). Preferably, the data is not directly stored onto the alternative Artcard at this stage however, or all 255 bytes of one Reed-Solomon block will be physically together on the card. Any dirt, grime, or stain that causes physical damage to the card has the potential of damaging more than 64 bytes in a single Reed-Solomon block, which would make that block unrecoverable. If there are no duplicates of that Reed-Solomon block, then the entire alternative Artcard cannot be decoded.

The solution is to take advantage of the fact that there are a large number of bytes on the alternative Artcard, and that the alternative Artcard has a reasonable physical size. The data can therefore be scrambled to ensure that symbols from a single Reed-Solomon block are not in close proximity to one another. Of course pathological cases of card degradation can cause Reed-Solomon blocks to be unrecoverable, but on average, the scrambling of data makes the card much more robust. The scrambling scheme chosen is simple and is illustrated schematically in Fig 14. All the Byte 0s from each Reed-Solomon block are placed together 1136, then all the Byte 1s etc. There will therefore be 7,168 byte 0's, then 7,168 Byte 1's etc. Each data block on the alternative Artcard can store 28,560 bytes. Consequently there are approximately 4 bytes from each Reed-Solomon block in each of the 64 data blocks on the alternative Artcard.

Under this scrambling scheme, complete damage to 16 entire data blocks on the alternative Artcard will result in 64 symbol errors per Reed-Solomon block. This means that if there is no other damage to the alternative Artcard, the entire data is completely recoverable, even if there is no data duplication.

Write the scrambled encoded data to the alternative Artcard

Once the original data has been Reed-Solomon encoded, duplicated, and scrambled, there are 1,827,840 bytes of data to be stored on the alternative Artcard. Each of the 64 data blocks on the alternative Artcard stores 28,560 bytes.

The data is simply written out to the alternative Artcard data blocks so that the first data block contains the first 28,560 bytes of the scrambled data, the second data block contains the next 28,560 bytes etc.

As illustrated in Fig. 61, within a data block, the data is written out column-wise left to right. Thus the left-most column within a data block contains the first 48 bytes of the 28,560 bytes of scrambled data, and the last column contains the last 48 bytes of the 28,560 bytes of scrambled data. Within a column, bytes are written out top to bottom, one bit at a time, starting from bit 7 and finishing with bit 0. If the bit is set (1), a black dot is placed on the alternative Artcard, if the bit is clear (0), no dot is placed, leaving it the white background color of the card.

For example, a set of 1,827,840 bytes of data can be created by scrambling 7,168 Reed-Solomon encoded blocks to be stored onto an alternative Artcard. The first 28,560 bytes of data are written to the first data block. The first 48 bytes of the first 28,560 bytes are written to the first column of the data block, the next 48 bytes to the next column and so on. Suppose the first two bytes of the 28,560 bytes are hex D3 5F. Those first two bytes will be stored in column 0 of the data block. Bit 7 of byte 0 will be stored first, then bit 6 and so on. Then Bit 7 of byte 1 will be stored through to bit 0 of byte 1. Since each "1" is stored as a black dot, and each "0" as a white dot, these two bytes will be represented on the alternative Artcard as the following set of dots:

* D3 (1101 0011) becomes: black, black, white, black, white, white, black, black
* 5F (0101 1111) becomes: white, black, white, black, black, black, black, black

Decoding an alternative Artcard

This section deals with extracting the original data from an alternative Artcard in an accurate and robust manner. Specifically, it assumes the alternative Artcard format as described in the previous chapter, and describes a method of extracting the original pre-encoded data from the alternative Artcard.

There are a number of general considerations that are part of the assumptions for decoding an alternative Artcard.

User

The purpose of an alternative Artcard is to store data for use in different applications. A user inserts an alternative Artcard into an alternative Artcard reader, and expects the data to be loaded in a "reasonable time". From the user's perspective, a motor transport moves the alternative Artcard into an alternative Artcard reader. This is not perceived as a problematic delay, since the alternative Artcard is in motion. Any time after the alternative Artcard has stopped is perceived as a delay, and should be minimized in any alternative Artcard reading scheme. Ideally, the entire alternative Artcard would be read while in motion, and thus there would be no perceived delay after the card had stopped moving.

For the purpose of the preferred embodiment, a *reasonable* time for an alternative Artcard to be physically loaded is defined to be 1.5 seconds. There should be a minimization of time for additional decoding after the alternative Artcard has stopped moving. Since the Active region of an alternative Artcard covers most of the alternative Artcard surface we can limit our timing concerns to that region.

Sampling Dots

The dots on an alternative Artcard must be sampled by a CCD reader or the like at least at double the printed resolution to satisfy Nyquist's Theorem. In practice it is better to sample at a higher rate than this. In the alternative Artcard reader environment, dots are preferably sampled at 3 times their printed resolution in each dimension, requiring 9 pixels to define a single dot. If the resolution of the alternative Artcard dots is 1600 dpi, the alternative Artcard reader's image sensor must scan pixels at 4800 dpi. Of course if a dot is not exactly aligned with the sampling sensor, the worst and most likely case as illustrated in Fig. 62, is that a dot will be sensed over a 4x4 pixel area.

Each sampled pixel is 1 byte (8 bits). The lowest 2 bits of each pixel can contain significant noise. Decoding algorithms must therefore be noise tolerant.

Alignment/Rotation

It is extremely unlikely that a user will insert an alternative Artcard into an alternative Artcard reader perfectly aligned with no rotation. Certain physical constraints at a reader entrance and motor transport grips will help ensure that once inserted, an alternative Artcard will stay at the original angle of insertion relative to the CCD. Preferably this angle of rotation, as illustrated in Fig. 63 is a maximum of 1 degree. There can be some slight aberrations in angle due to jitter and motor rumble during the reading process, but these are assumed to essentially stay within the 1-degree limit.

The physical dimensions of an alternative Artcard are 86mm x 55mm. A 1 degree rotation adds 1.5mm to the effective height of the card as 86mm passes under the CCD (86 sin 1°), which will affect the required CCD length.

The effect of a 1 degree rotation on alternative Artcard reading is that a single scanline from the CCD will include a number of different columns of dots from the alternative Artcard. This is illustrated in an exaggerated form in Fig. 63 which shows the drift of dots across the columns of pixels. Although exaggerated in this diagram, the actual drift will be a maximum 1 pixel column shift every 57 pixels.

When an alternative Artcard is not rotated, a single column of dots can be read over 3 pixel scanlines. The more an alternative Artcard is rotated, the greater the local effect. The more dots being read, the longer the rotation effect is applied. As either of these factors increase, the larger the number of pixel scanlines that are needed to be read to yield a given set of dots from a single column on an alternative Artcard. The following table shows how many pixel scanlines are required for a single column of dots in a particular alternative Artcard structure.

Region	**Height**	**0° rotation**	**1° rotation**
Active region	3208 dots	3 pixel columns	168 pixel columns
Data block	394 dots	3 pixel columns	21 pixel columns

To read an entire alternative Artcard, we need to read 87 mm (86mm + 1mm due to 1° rotation). At 4800 dpi this implies 16,252 pixel columns.

CCD (or other Linear Image Sensor) Length

The length of the CCD itself must accommodate:

- the physical height of the alternative Artcard (55 mm),
- vertical slop on physical alternative Artcard insertion (1mm)
- insertion rotation of up to 1 degree (86 sin 1° = 1.5mm)

These factors combine to form a total length of 57.5mm.

When the alternative Artcard Image sensor CCD in an alternative Artcard reader scans at 4800 dpi, a single scanline is 10,866 pixels. For simplicity, this figure has been rounded up to 11,000 pixels. The Active Region of an alternative Artcard has a height of 3208 dots, which implies 9,624 pixels. A Data Region has a height of 384 dots, which implies 1,152 pixels.

DRAM Size

The amount of memory required for alternative Artcard reading and decoding is ideally minimized. The typical placement of an alternative Artcard reader is an embedded system where memory resources are precious. This is made more problematic by the effects of rotation. As described above, the more an alternative Artcard is rotated, the more scanlines are required to effectively recover original dots.

There is a trade-off between algorithmic complexity, user perceived delays, robustness, and memory usage. One of the simplest reader algorithms would be to simply scan the whole alternative Artcard, and then to process the whole data without real-time constraints. Not only would this require huge reserves of memory, it would take longer than a reader algorithm that occurred concurrently with the alternative Artcard reading process.

The actual amount of memory required for reading and decoding an alternative Artcard is twice the amount of space required to hold the *encoded* data, together with a small amount of scratch space (1-2 KB). For the 1600 dpi alternative Artcard, this implies a 4 MB memory requirement. The actual usage of the memory is detailed in the following algorithm description.

Transfer rate

DRAM bandwidth assumptions need to be made for timing considerations and to a certain extent affect algorithmic design, especially since alternative Artcard readers are typically part of an embedded system.

A standard Rambus Direct RDRAM architecture is assumed, as defined in Rambus Inc, Oct 1997, *Direct Rambus Technology Disclosure,* with a peak data transfer rate of 1.6GB/sec. Assuming 75% efficiency (easily achieved), we have an average of 1.2GB/sec data transfer rate. The average time to access a block of 16 bytes is therefore 12ns.

Dirty Data

Physically damaged alternative Artcards can be inserted into a reader. Alternative Artcards may be scratched, or be stained with grime or dirt. A alternative Artcard reader can't assume to read everything perfectly. The effect of dirty data is made worse by blurring, as the dirty data affects the surrounding clean dots.

Blurry Environment

There are two ways that blurring is introduced into the alternative Artcard reading environment:

* Natural blurring due to nature of the CCD's distance from the alternative Artcard.
* Warping of alternative Artcard

Natural blurring of an alternative Artcard image occurs when there is overlap of sensed data from the CCD. Blurring can be useful, as the overlap ensures there are no high frequencies in the sensed data, and that there is no data missed by the CCD. However if the area covered by a CCD pixel is too large, there will be too much blurring and the sampling required to recover the data will not be met. Fig. 64 is a schematic illustration of the overlapping of sensed data.

Another form of blurring occurs when an alternative Artcard is slightly warped due to heat damage. When the

warping is in the vertical dimension, the distance between the alternative Artcard and the CCD will not be constant, and the level of blurring will vary across those areas.

Black and white dots were chosen for alternative Artcards to give the best dynamic range in blurry reading environments. Blurring can cause problems in attempting to determine whether a given dot is black or white.

As the blurring increases, the more a given dot is influenced by the surrounding dots. Consequently the dynamic range for a particular dot decreases. Consider a white dot and a black dot, each surrounded by all possible sets of dots. The 9 dots are blurred, and the center dot sampled. Fig. 65 shows the distribution of resultant center dot values for black and white dots.

The diagram is intended to be a representative blurring. The curve 1140 from 0 to around 180 shows the range of black dots. The curve 1141 from 75 to 250 shows the range of white dots. However the greater the blurring, the more the two curves shift towards the center of the range and therefore the greater the intersection area, which means the more difficult it is to determine whether a given dot is black or white. A pixel value at the center point of intersection is ambiguous – the dot is equally likely to be a black or a white.

As the blurring increases, the likelihood of a read bit error increases. Fortunately, the Reed-Solomon decoding algorithm can cope with these gracefully up to *t* symbol errors. Fig. 65 is a graph of number predicted number of alternative Artcard Reed-Solomon blocks that cannot be recovered given a particular symbol error rate. Notice how the Reed-Solomon decoding scheme performs well and then substantially degrades. If there is no Reed-Solomon block duplication, then only 1 block needs to be in error for the data to be unrecoverable. Of course, with block duplication the chance of an alternative Artcard decoding increases.

Fig. 66 only illustrates the symbol (byte) errors corresponding to the number of Reed-Solomon blocks in error. There is a trade-off between the amount of blurring that can be coped with, compared to the amount of damage that has been done to a card. Since all error detection and correction is performed by a Reed-Solomon decoder, there is a finite number of errors per Reed-Solomon data block that can be coped with. The more errors introduced through blurring, the fewer the number of errors that can be coped with due to alternative Artcard damage.

Overview of alternative Artcard Decoding

As noted previously, when the user inserts an alternative Artcard into an alternative Artcard reading unit, a motor transport ideally carries the alternative Artcard past a monochrome linear CCD image sensor. The card is sampled in each dimension at three times the printed resolution. Alternative Artcard reading hardware and software compensate for rotation up to 1 degree, jitter and vibration due to the motor transport, and blurring due to variations in alternative Artcard to CCD distance. A digital bit image of the data is extracted from the sampled image by a complex method described here. Reed-Solomon decoding corrects arbitrarily distributed data corruption of up to 25% of the raw data on the alternative Artcard. Approximately 1 MB of corrected data is extracted from a 1600 dpi card.

The steps involved in decoding are so as indicated in Fig. 67.

The decoding process requires the following steps:

* Scan 1144 the alternative Artcard at three times printed resolution (eg scan 1600 dpi alternative Artcard at 4800 dpi)
* Extract 1145 the data bitmap from the scanned dots on the card.
* Reverse 1146 the bitmap if the alternative Artcard was inserted backwards.
* Unscramble 1147 the encoded data

* Reed-Solomon 1148 decode the data from the bitmap

Algorithmic Overview

Phase 1 – Real time bit image extraction

A simple comparison between the available memory (4 MB) and the memory required to hold all the scanned pixels for a 1600 dpi alternative Artcard (172.5 MB) shows that unless the card is read multiple times (not a realistic option), the extraction of the bitmap from the pixel data must be done on the fly, in real time, while the alternative Artcard is moving past the CCD. Two tasks must be accomplished in this phase:

* Scan the alternative Artcard at 4800 dpi
* Extract the data bitmap from the scanned dots on the card

The rotation and unscrambling of the bit image cannot occur until the whole bit image has been extracted. It is therefore necessary to assign a memory region to hold the extracted bit image. The bit image fits easily within 2MB, leaving 2MB for use in the extraction process.

Rather than extracting the bit image while looking only at the current scanline of pixels from the CCD, it is possible to allocate a buffer to act as a window onto the alternative Artcard, storing the last *N* scanlines read. Memory requirements do not allow the entire alternative Artcard to be stored this way (172.5MB would be required), but allocating 2MB to store 190 pixel columns (each scanline takes less than 11,000 bytes) makes the bit image extraction process simpler.

The 4MB memory is therefore used as follows:

* 2 MB for the extracted bit image
* ~2 MB for the scanned pixels
* 1.5 KB for Phase 1 scratch data (as required by algorithm)

The time taken for Phase 1 is 1.5 seconds, since this is the time taken for the alternative Artcard to travel past the CCD and physically load.

Phase 2 – Data extraction from bit image

Once the bit image has been extracted, it must be unscrambled and potentially rotated 180°. It must then be decoded. Phase 2 has no real-time requirements, in that the alternative Artcard has stopped moving, and we are only concerned with the user's perception of elapsed time. Phase 2 therefore involves the remaining tasks of decoding an alternative Artcard:

* Re-organize the bit image, reversing it if the alternative Artcard was inserted backwards
* Unscramble the encoded data
* Reed-Solomon decode the data from the bit image

The input to Phase 2 is the 2MB bit image buffer. Unscrambling and rotating cannot be performed *in situ*, so a second 2MB buffer is required. The 2MB buffer used to hold scanned pixels in Phase 1 is no longer required and can be used to store the rotated unscrambled data.

The Reed-Solomon decoding task takes the unscrambled bit image and decodes it to 910,082 bytes. The decoding can be performed *in situ*, or to a specified location elsewhere. The decoding process does not require any additional memory buffers.

The 4MB memory is therefore used as follows:

* 2 MB for the extracted bit image (from Phase 1)

* ~2 MB for the unscrambled, potentially rotated bit image
* < 1KB for Phase 2 scratch data (as required by algorithm)

The time taken for Phase 2 is hardware dependent and is bound by the time taken for Reed-Solomon decoding. Using a dedicated core such as LSI Logic's L64712, or an equivalent CPU/DSP combination, it is estimated that Phase 2 would take 0.32 seconds.

Phase 1 – Extract Bit Image

This is the real-time phase of the algorithm, and is concerned with extracting the bit image from the alternative Artcard as scanned by the CCD.

As shown in Fig. 68 Phase 1 can be divided into 2 asynchronous process streams. The first of these streams is simply the real-time reader of alternative Artcard pixels from the CCD, writing the pixels to DRAM. The second stream involves looking at the pixels, and extracting the bits. The second process stream is itself divided into 2 processes. The first process is a global process, concerned with locating the start of the alternative Artcard. The second process is the bit image extraction proper.

Fig. 69 illustrates the data flow from a data/process perspective.

Timing

For an entire 1600 dpi alternative Artcard, it is necessary to read a maximum of 16,252 pixel-columns. Given a total time of 1.5 seconds for the whole alternative Artcard, this implies a maximum time of 92,296ns per pixel column during the course of the various processes.

Process 1 – Read pixels from CCD

The CCD scans the alternative Artcard at 4800 dpi, and generates 11,000 1-byte pixel samples per column. This process simply takes the data from the CCD and writes it to DRAM, completely independently of any other process that is reading the pixel data from DRAM. Fig. 70 illustrates the steps involved.

The pixels are written contiguously to a 2MB buffer that can hold 190 full columns of pixels. The buffer always holds the 190 columns most recently read. Consequently, any process that wants to read the pixel data (such as Processes 2 and 3) must firstly know where to look for a given column, and secondly, be fast enough to ensure that the data required is actually in the buffer.

Process 1 makes the current scanline number (CurrentScanLine) available to other processes so they can ensure they are not attempting to access pixels from scanlines that have not been read yet.

The time taken to write out a single column of data (11,000 bytes) to DRAM is:

11,000/16 * 12 = 8,256ns

Process 1 therefore uses just under 9% of the available DRAM bandwidth (8256/92296).

Process 2 – Detect start of alternative Artcard

This process is concerned with locating the Active Area on a scanned alternative Artcard. The input to this stage is the pixel data from DRAM (placed there by Process 1). The output is a set of bounds for the first 8 data blocks on the alternative Artcard, required as input to Process 3. A high level overview of the process can be seen in Fig. 71.

An alternative Artcard can have vertical slop of 1mm upon insertion. With a rotation of 1 degree there is further vertical slop of 1.5mm (86 sin 1°). Consequently there is a total vertical slop of 2.5mm. At 1600dpi, this equates to a slop of approximately 160 dots. Since a single data block is only 394 dots high, the slop is just under half a data block. To get a better estimate of where the data blocks are located the alternative Artcard itself needs to be detected.

Process 2 therefore consists of two parts:

* Locate the start of the alternative Artcard, and if found,
* Calculate the bounds of the first 8 data blocks based on the start of the alternative Artcard.

Locate the Start of the alternative Artcard

The scanned pixels outside the alternative Artcard area are black (the surface can be black plastic or some other non-reflective surface). The border of the alternative Artcard area is white. If we process the pixel columns one by one, and filter the pixels to either black or white, the transition point from black to white will mark the start of the alternative Artcard. The highest level process is as follows:

```
for (Column=0; Column < MAX_COLUMN; Column++)
{
        Pixel = ProcessColumn(Column)
        if (Pixel)
                        return (Pixel, Column)          // success!
}
return failure                                          // no alternative Artcard found
```

The ProcessColumn function is simple. Pixels from two areas of the scanned column are passed through a threshold filter to determine if they are black or white. It is possible to then wait for a certain number of white pixels and announce the start of the alternative Artcard once the given number has been detected. The logic of processing a pixel column is shown in the following pseudocode. 0 is returned if the alternative Artcard has not been detected during the column. Otherwise the pixel number of the detected location is returned.

```
// Try upper region first
count = 0
for (i=0; i<UPPER_REGION_BOUND; i++)
{
if (GetPixel(column, i) < THRESHOLD)
{
                        count = 0                       // pixel is black
        }
        else
        {
count++                                 // pixel is white
if (count > WHITE_ALTERNATIVE ARTCARD)
                return i
        }
}
```

```
// Try lower region next. Process pixels in reverse
count = 0
for (i=MAX_PIXEL_BOUND; i>LOWER_REGION_BOUND; i--)
{
if (GetPixel(column, i) < THRESHOLD)
{
count = 0                                   // pixel is black
}
else
{
count++                                     // pixel is white
if (count > WHITE_ALTERNATIVE ARTCARD)
                                            return i
        }
}

//Not in upper bound or in lower bound. Return failure
return 0
```

Calculate Data Block Bounds

At this stage, the alternative Artcard has been detected. Depending on the rotation of the alternative Artcard, either the top of the alternative Artcard has been detected or the lower part of the alternative Artcard has been detected. The second step of Process 2 determines which was detected and sets the data block bounds for Phase 3 appropriately.

A look at Phase 3 reveals that it works on data block segment bounds: each data block has a StartPixel and an EndPixel to determine where to look for targets in order to locate the data block's data region.

If the pixel value is in the upper half of the card, it is possible to simply use that as the first StartPixel bounds. If the pixel value is in the lower half of the card, it is possible to move back so that the pixel value is the last segment's EndPixel bounds. We step forwards or backwards by the alternative Artcard data size, and thus set up each segment with appropriate bounds. We are now ready to begin extracting data from the alternative Artcard.

```
// Adjust to become first pixel if is lower pixel
if (pixel > LOWER_REGION_BOUND)
{
pixel -= 6 * 1152
if (pixel < 0)
                                            pixel = 0
}

for (i=0; i<6; i++)
```

```
{
endPixel = pixel + 1152
segment[i].MaxPixel = MAX_PIXEL_BOUND
segment[i].SetBounds(pixel, endPixel)
pixel = endPixel
}
```

The MaxPixel value is defined in Process 3, and the SetBounds function simply sets StartPixel and EndPixel clipping with respect to 0 and MaxPixel.

Process 3 – Extract bit data from pixels

This is the heart of the alternative Artcard Reader algorithm. This process is concerned with extracting the bit data from the CCD pixel data. The process essentially creates a bit-image from the pixel data, based on scratch information created by Process 2, and maintained by Process 3. A high level overview of the process can be seen in Fig. 72.

Rather than simply read an alternative Artcard's pixel column and determine what pixels belong to what data block, Process 3 works the other way around. It knows where to look for the pixels of a given data block. It does this by dividing a logical alternative Artcard into 8 segments, each containing 8 data blocks as shown in Fig. 73.

The segments as shown match the *logical* alternative Artcard. Physically, the alternative Artcard is likely to be rotated by some amount. The segments remain locked to the logical alternative Artcard structure, and hence are rotation-independent. A given segment can have one of two states:

* *LookingForTargets*: where the exact data block position for this segment has not yet been determined. Targets are being located by scanning pixel column data in the bounds indicated by the segment bounds. Once the data block has been located via the targets, and bounds set for black & white, the state changes to *ExtractingBitImage*.

* *ExtractingBitImage*: where the data block has been accurately located, and bit data is being extracted one *dot column* at a time and written to the alternative Artcard bit image. The following of data block clockmarks gives accurate dot recovery regardless of rotation, and thus the segment bounds are ignored. Once the entire data block has been extracted, new segment bounds are calculated for the next data block based on the current position. The state changes to *LookingForTargets*.

The process is complete when all 64 data blocks have been extracted, 8 from each region.

Each data block consists of 595 columns of data, each with 48 bytes. Preferably, the 2 orientation columns for the data block are each extracted at 48 bytes each, giving a total of 28,656 bytes extracted per data block. For simplicity, it is possible to divide the 2MB of memory into 64 x 32k chunks. The nth data block for a given segment is stored at the location:

StartBuffer + (256k * n)

Data Structure for Segments

Each of the 8 segments has an associated data structure. The data structure defining each segment is stored in the scratch data area. The structure can be as set out in the following table:

DataName	**Comment**
CurrentState	Defines the current state of the segment. Can be one of: · *LookingForTargets* · *ExtractingBitImage* Initial value is *LookingForTargets*
	Used during *LookingForTargets:*
StartPixel	Upper pixel bound of segment. Initially set by Process 2.
EndPixel	Lower pixel bound of segment. Initially set by Process 2
MaxPixel	The maximum pixel number for any scanline. It is set to the same value for each segment: 10,866.
CurrentColumn	Pixel column we're up to while looking for targets.
FinalColumn	Defines the last pixel column to look in for targets.
LocatedTargets	Points to a list of located Targets.
PossibleTargets	Points to a set of pointers to Target structures that represent currently investigated pixel shapes that *may* be targets
AvailableTargets	Points to a set of pointers to Target structures that are currently unused.
TargetsFound	The number of Targets found so far in this data block.
PossibleTargetCount	The number of elements in the PossibleTargets list
AvailabletargetCount	The number of elements in the AvailableTargets list
	Used during *ExtractingBitImage:*
BitImage	The start of the Bit Image data area in DRAM where to store the next data block: Segment 1 = X, Segment 2 = X+32k etc Advances by 256k each time the state changes from ExtractingBitImageData to Looking ForTargets
CurrentByte	Offset within BitImage where to store next extracted byte
CurrentDotColumn	Holds current clockmark/dot column number. Set to –8 when transitioning from state LookingForTarget to ExtractingBitImage.
UpperClock	Coordinate (column/pixel) of current upper clockmark/border
LowerClock	Coordinate (column/pixel) of current lower clockmark/border
CurrentDot	The center of the current data dot for the current dot column. Initially set to the center of the first (topmost) dot of the data column.
DataDelta	What to add (column/pixel) to CurrentDot to advance to the center of the

	next dot.
BlackMax	Pixel value above which a dot is definitely white
WhiteMin	Pixel value below which a dot is definitely black
MidRange	The pixel value that has equal likelihood of coming from black or white. When all smarts have not determined the dot, this value is used to determine it. Pixels below this value are black, and above it are white.

High Level of Process 3

Process 3 simply iterates through each of the segments, performing a single line of processing depending on the segment's current state. The pseudocode is straightforward:

```
blockCount = 0
while (blockCount < 64)
        for (i=0; i<8; i++)
        {
        finishedBlock = segment[i].ProcessState()
        if (finishedBlock)
                                blockCount++
}
```

Process 3 must be halted by an external controlling process if it has not terminated after a specified amount of time. This will only be the case if the data cannot be extracted. A simple mechanism is to start a countdown after Process 1 has finished reading the alternative Artcard. If Process 3 has not finished by that time, the data from the alternative Artcard cannot be recovered.

CurrentState = LookingForTargets

Targets are detected by reading columns of pixels, one pixel-column at a time rather than by detecting dots within a given band of pixels (between StartPixel and EndPixel) certain patterns of pixels are detected. The pixel columns are processed one at a time until either all the targets are found, or until a specified number of columns have been processed. At that time the targets can be processed and the data area located via clockmarks. The state is changed to ExtractingBitImage to signify that the data is now to be extracted. If enough valid targets are not located, then the data block is ignored, skipping to a column definitely within the missed data block, and then beginning again the process of looking for the targets in the *next* data block. This can be seen in the following pseudocode:

```
finishedBlock = FALSE
if(CurrentColumn < Process1.CurrentScanLine)
{
ProcessPixelColumn()
CurrentColumn++
```

```
}
if ((TargetsFound == 6) || (CurrentColumn > LastColumn))
{
if (TargetsFound >= 2)
                    ProcessTargets()
        if (TargetsFound >= 2)
        {
BuildClockmarkEstimates()
SetBlackAndWhiteBounds()
CurrentState = ExtractingBitImage
CurrentDotColumn = -8
        }
        else
        {
// data block cannot be recovered. Look for
// next instead. Must adjust pixel bounds to
// take account of possible 1 degree rotation.
finishedBlock = TRUE
SetBounds(StartPixel-12, EndPixel+12)
BitImage += 256KB
CurrentByte = 0
LastColumn += 1024
TargetsFound = 0
        }
}
return finishedBlock
```

ProcessPixelColumn

Each pixel column is processed within the specified bounds (between StartPixel and EndPixel) to search for certain patterns of pixels which will identify the targets. The structure of a single target (target number 2) is as previously shown in Fig. 54:

From a pixel point of view, a target can be identified by:

* Left black region, which is a number of pixel columns consisting of large numbers of contiguous black pixels to build up the first part of the target.
* Target center, which is a white region in the center of further black columns
* Second black region, which is the 2 black dot columns after the target center
* Target number, which is a black-surrounded white region that defines the target number by its length
* Third black region, which is the 2 black columns after the target number

An overview of the required process is as shown in Fig. 74.

Since identification only relies on black or white pixels, the pixels 1150 from each column are passed through

a filter 1151 to detect *black* or *white*, and then run length encoded 1152. The run-lengths are then passed to a state machine 1153 that has access to the last 3 run lengths and the 4th last color. Based on these values, possible targets pass through each of the identification stages.

The GatherMin&Max process 1155 simply keeps the minimum & maximum pixel values encountered during the processing of the segment. These are used once the targets have been located to set BlackMax, WhiteMin, and MidRange values.

Each segment keeps a set of target structures in its search for targets. While the target structures themselves don't move around in memory, several segment variables point to lists of pointers to these target structures. The three pointer lists are repeated here:

LocatedTargets	Points to a set of Target structures that represent located targets.
PossibleTargets	Points to a set of pointers to Target structures that represent currently investigated pixel shapes that *may* be targets.
AvailableTargets	Points to a set of pointers to Target structures that are currently unused.

There are counters associated with each of these list pointers: TargetsFound, PossibleTargetCount, and AvailableTargetCount respectively.

Before the alternative Artcard is loaded, TargetsFound and PossibleTargetCount are set to 0, and AvailableTargetCount is set to 28 (the maximum number of target structures possible to have under investigation since the minimum size of a target border is 40 pixels, and the data area is approximately 1152 pixels). An example of the target pointer layout is as illustrated in Fig. 75.

As potential new targets are found, they are taken from the AvailableTargets list 1157, the target data structure is updated, and the pointer to the structure is added to the PossibleTargets list 1158. When a target is completely verified, it is added to the LocatedTargets list 1159. If a possible target is found not to be a target after all, it is placed back onto the AvailableTargets list 1157. Consequently there are always 28 target pointers in circulation at any time, moving between the lists.

The Target data structure 1160 can have the following form:

DataName	**Comment**
CurrentState	The current state of the target search
DetectCount	Counts how long a target has been in a given state
StartPixel	Where does the target start? All the lines of pixels in this target should start within a tolerance of this pixel value.
TargetNumber	Which target number is this (according to what was read)
Column	Best estimate of the target's center column ordinate
Pixel	Best estimate of the target's center pixel ordinate

The ProcessPixelColumn function within the find targets module 1162 (Fig. 74) then, goes through all the run lengths one by one, comparing the runs against existing possible targets (via StartPixel), or creating new possible targets if a potential target is found where none was previously known. In all cases, the comparison is only made if S0.color is white and S1.color is black.

The pseudocode for the ProcessPixelColumn set out hereinafter. When the first target is positively identified, the last column to be checked for targets can be determined as being within a maximum distance from it. For 1° rotation, the maximum distance is 18 pixel columns.

```
pixel = StartPixel
t = 0
target=PossibleTarget[t]
while ((pixel < EndPixel) && (TargetsFound < 6))
{
    if ((S0.Color == white) && (S1.Color == black))
    {
            do
            {
                keepTrying = FALSE
                if
                (
                    (target != NULL)
                &&
                (target->AddToTarget(Column, pixel, S1, S2, S3))
            )
            {
                if (target->CurrentState == IsATarget)
                {
                    Remove target from PossibleTargets List
                    Add target to LocatedTargets List
                    TargetsFound++
                    if (TargetsFound == 1)
                        FinalColumn = Column + MAX_TARGET_DELTA}
                }
                else if (target->CurrentState == NotATarget)
                {
                    Remove target from PossibleTargets List
                    Add target to AvailableTargets List
                    keepTrying = TRUE
                }
```

```
        else
        {
            t++         // advance to next target
        }
        target = PossibleTarget[t]
    }
    else
        {
            tmp = AvailableTargets[0]
            if (tmp->AddToTarget(Column,pixel,S1,S2,S3)
            {
                Remove tmp from AvailableTargets list
                Add tmp to PossibleTargets list
                t++         // target t has been shifted right
            }
        }
    } while (keepTrying)
  }
  pixel += S1.RunLength
  Advance S0/S1/S2/S3
}
```

AddToTarget is a function within the find targets module that determines whether it is possible or not to add the specific run to the given target:

* If the run is within the tolerance of target's starting position, the run is directly related to the current target, and can therefore be applied to it.

* If the run starts *before* the target, we assume that the existing target is still ok, but not relevant to the run. The target is therefore left unchanged, and a return value of FALSE tells the caller that the run was not applied. The caller can subsequently check the run to see if it starts a whole new target of its own.

* If the run starts *after* the target, we assume the target is no longer a possible target. The state is changed to be NotATarget, and a return value of TRUE is returned.

If the run is to be applied to the target, a specific action is performed based on the current state and set of runs in S1, S2, and S3. The AddToTarget pseudocode is as follows:

```
MAX_TARGET_DELTA = 1
if (CurrentState != NothingKnown)
{
    if (pixel > StartPixel)              // run starts after target
    {
        diff = pixel - StartPixel
```

```
                if (diff > MAX_TARGET_DELTA)
                {
                        CurrentState = NotATarget
                        return TRUE
                }
        }
        else
        {
                        diff = StartPixel - pixel
                        if (diff > MAX_TARGET_DELTA)
                                return FALSE
                }
}
runType = DetermineRunType(S1, S2, S3)
EvaluateState(runType)
StartPixel = currentPixel
return TRUE
```

Types of pixel runs are identified in DetermineRunType is as follows:

Types of Pixel Runs	
Type	**How identified (S1 is always black)**
TargetBorder	S1 = 40 < RunLength < 50 S2 = white run
TargetCenter	S1 = 15 < RunLength < 26 S2 = white run with [RunLength < 12] S3 = black run with [15 < RunLength < 26]
TargetNumber	S2 = white run with [RunLength <= 40]

The EvaluateState procedure takes action depending on the current state and the run type.

The actions are shown as follows in tabular form:

CurrentState	**Type of Pixel Run**	**Action**
NothingKnown	TargetBorder	DetectCount = 1 CurrentState = LeftOfCenter
LeftOfCenter	TargetBorder	DetectCount++ if (DetectCount > 24) CurrentState = NotATarget
	TargetCenter	DetectCount = 1 CurrentState = InCenter Column = currentColumn Pixel = currentPixel + S1.RunLength
		CurrentState = NotATarget

InCenter	TargetCenter	DetectCount++
		tmp = currentPixel + S1.RunLength
		if (tmp < Pixel)
		Pixel = tmp
		if (DetectCount > 13)
		CurrentState = NotATarget

	TargetBorder	DetectCount = 1 CurrentState = RightOfCenter
		CurrentState = NotATarget
RightOfCenter	TargetBorder	DetectCount++ if (DetectCount >= 12) CurrentState = NotATarget
	TargetNumber	DetectCount = 1 CurrentState = InTargetNumber TargetNumber = (S2.RunLength+ 2)/6
		CurrentState = NotATarget

InTargetNumber	TargetNumber	tmp = (S2.RunLength+ 2)/6
		if (tmp > TargetNumber)
		TargetNumber = tmp
		DetectCount++
		if (DetectCount >= 12)
		CurrentState = NotATarget

CurrentState	Type of Pixel Run	Action

	TargetBorder	if (DetectCount >= 3)
		CurrentState = IsATarget
		else
		CurrentState = NotATarget

		CurrentState = NotATarget
IsATarget or NotATarget	-	-

Processing Targets

he located targets (in the LocatedTargets list) are stored in the order they were located. Depending on alternative Artcard rotation these targets will be in ascending pixel order or descending pixel order. In addition, the target numbers recovered from the targets may be in error. We may have also have recovered a false target. Before the clockmark estimates can be obtained, the targets need to be processed to ensure that invalid targets are discarded, and valid targets have target numbers fixed if in error (e.g. a damaged target number due to dirt). Two main steps are involved:

* Sort targets into ascending pixel order
* Locate and fix erroneous target numbers

The first step is simple. The nature of the target retrieval means that the data should already be sorted in either ascending pixel or descending pixel. A simple swap sort ensures that if the 6 targets are already sorted correctly a maximum of 14 comparisons is made with no swaps. If the data is not sorted, 14 comparisons are made, with 3 swaps. The following pseudocode shows the sorting process:

```
for (i = 0; i < TargetsFound-1; i++)
{
        oldTarget = LocatedTargets[i]
        bestPixel = oldTarget->Pixel
        best = i
        j = i+1
        while (j<TargetsFound)
        {
                if (LocatedTargets[j]-> Pixel < bestPixel)
                        best = j
                j++
        }
if (best != i) // move only if necessary

                LocatedTargets[i] = LocatedTargets[best]
```

```
                LocatedTargets[best] = oldTarget
        }
}
```

Locating and fixing erroneous target numbers is only slightly more complex. One by one, each of the N targets found is assumed to be correct. The other targets are compared to this "correct" target and the number of targets that require change should target N be correct is counted. If the number of changes is 0, then all the targets must already be correct. Otherwise the target that requires the fewest changes to the others is used as the base for change. A change is registered if a given target's target number and pixel position do not correlate when compared to the "correct" target's pixel position and target number. The change may mean updating a target's target number, or it may mean elimination of the target. It is possible to assume that ascending targets have pixels in ascending order (since they have already been sorted).

```
kPixelFactor = 1/(55 * 3)
bestTarget = 0
bestChanges = TargetsFound + 1
for (i=0; i< TotalTargetsFound; i++)
{
        numberOfChanges = 0;
fromPixel = (LocatedTargets[i])->Pixel
fromTargetNumber = LocatedTargets[i].TargetNumber
for (j=1; j< TotalTargetsFound; j++)
{
toPixel = LocatedTargets[j]->Pixel
deltaPixel = toPixel - fromPixel
if (deltaPixel >= 0)
                deltaPixel += PIXELS_BETWEEN_TARGET_CENTRES/2
        else
                deltaPixel -= PIXELS_BETWEEN_TARGET_CENTRES/2
targetNumber =deltaPixel * kPixelFactor
targetNumber += fromTargetNumber
if
        (
                (targetNumber < 1)||(targetNumber > 6)
                ||
                (targetNumber != LocatedTargets[j]-> TargetNumber)
        )
                numberOfChanges++
}
```

```
        if (numberOfChanges < bestChanges)
        {
bestTarget = i
bestChanges = numberOfChanges
        }
        if (bestChanges < 2)
                break;
}
```

In most cases this function will terminate with bestChanges = 0, which means no changes are required. Otherwise the changes need to be applied. The functionality of applying the changes is identical to counting the changes (in the pseudocode above) until the comparison with targetNumber. The change application is:

```
if ((targetNumber < 1)||(targetNumber > TARGETS_PER_BLOCK))
{
        LocatedTargets[j] = NULL
        TargetsFound--
}
else
{
        LocatedTargets[j]-> TargetNumber = targetNumber
}
```

At the end of the change loop, the LocatedTargets list needs to be compacted and all NULL targets removed.

At the end of this procedure, there may be fewer targets. Whatever targets remain may now be used (at least 2 targets are required) to locate the clockmarks and the data region.

Building Clockmark Estimates from Targets

As shown previously in Fig. 55, the upper region's first clockmark dot 1126 is 55 dots away from the center of the first target 1124 (which is the same as the distance between target centers). The center of the clockmark dots is a further 1 dot away, and the black border line 1123 is a further 4 dots away from the first clockmark dot. The lower region's first clockmark dot is exactly 7 targets-distance away (7 x 55 dots) from the upper region's first clockmark dot 1126.

It cannot be assumed that Targets 1 and 6 have been located, so it is necessary to use the upper-most and lower-most targets, and use the target numbers to determine which targets are being used. It is necessary at least 2 targets at this point. In addition, the target centers are only estimates of the actual target centers. It is to locate the target center more accurately. The center of a target is white, surrounded by black. We therefore want to find the local maximum in both pixel & column dimensions. This involves reconstructing the continuous image since the maximum is unlikely to be aligned exactly on an integer boundary (our estimate).

Before the continuous image can be constructed around the target's center, it is necessary to create a better estimate of the 2 target centers. The existing target centers actually are the top left coordinate of the bounding box of the target center. It is a simple process to go through each of the pixels for the area defining the center of the target, and find the pixel with the highest value. There may be more than one pixel with the same maximum pixel value, but the estimate of the center value only requires one pixel.

The pseudocode is straightforward, and is performed for each of the 2 targets:

```
CENTER_WIDTH = CENTER_HEIGHT = 12
maxPixel = 0x00
for (i=0; i<CENTER_WIDTH; i++)
        for (j=0; j<CENTER_HEIGHT; j++)
        {
p = GetPixel(column+i, pixel+j)
if (p > maxPixel)
{
maxPixel = p
centerColumn = column + i
centerPixel = pixel + j
                                }
        }
Target.Column = centerColumn
Target.Pixel = centerPixel
```

At the end of this process the target center coordinates point to the whitest pixel of the target, which should be within one pixel of the actual center. The process of building a more accurate position for the target center involves reconstructing the continuous signal for 7 scanline slices of the target, 3 to either side of the estimated target center. The 7 maximum values found (one for each of these pixel dimension slices) are then used to reconstruct a continuous signal in the column dimension and thus to locate the maximum value in that dimension.

```
// Given estimates column and pixel, determine a
// betterColumn and betterPixel as the center of
// the target
for (y=0; y<7; y++)
{
        for (x=0; x<7; x++)
                samples[x] = GetPixel(column-3+y, pixel-3+x)
FindMax(samples, pos, maxVal)
reSamples[y] = maxVal
if (y == 3)
```

betterPixel = pos + pixel

}

FindMax(reSamples, pos, maxVal)

betterColumn = pos + column

FindMax is a function that reconstructs the original 1 dimensional signal based sample points and returns the position of the maximum as well as the maximum value found. The method of signal reconstruction/resampling used is the Lanczos3 windowed sinc function as shown in Fig. 76.

The Lanczos3 windowed sinc function takes 7 (pixel) samples from the dimension being reconstructed, centered around the estimated position X, i.e. at X-3, X-2, X-1, X, X+1, X+2, X+3. We reconstruct points from X-1 to X+1, each at an interval of 0.1, and determine which point is the maximum. The position that is the maximum value becomes the new center. Due to the nature of the kernel, only 6 entries are required in the convolution kernel for points between X and X+1. We use 6 points for X-1 to X, and 6 points for X to X+1, requiring 7 points overall in order to get pixel values from X-1 to X+1 since some of the pixels required are the same.

Given accurate estimates for the upper-most target from and lower-most target to, it is possible to calculate the position of the first clockmark dot for the upper and lower regions as follows:

TARGETS_PER_BLOCK = 6

numTargetsDiff = to.TargetNum – from.TargetNum

deltaPixel = (to.Pixel – from.Pixel) / numTargetsDiff

deltaColumn = (to.Column – from.Column) / numTargetsDiff

UpperClock.pixel = from.Pixel - (from.TargetNum*deltaPixel)

UpperClock.column = from.Column-(from.TargetNum*deltaColumn)

// Given the first dot of the upper clockmark, the

// first dot of the lower clockmark is straightforward.

LowerClock.pixel = UpperClock.pixel +
((TARGETS_PER_ BLOCK+1) * deltaPixel)

LowerClock.column = UpperClock.column +
((TARGETS_PER_ BLOCK+1) * deltaColumn)

This gets us to the first clockmark dot. It is necessary move the *column* position a further 1 dot away from the data area to reach the center of the clockmark. It is necessary to also move the *pixel* position a further 4 dots away to reach the center of the border line. The pseudocode values for deltaColumn and deltaPixel are based on a 55 dot distance (the distance between targets), so these deltas must be scaled by 1/55 and 4/55 respectively before being applied to the clockmark coordinates. This is represented as:

kDeltaDotFactor = 1/DOTS_BETWEEN_TARGET_CENTRES

deltaColumn *= kDeltaDotFactor

```
deltaPixel *= 4 * kDeltaDotFactor
UpperClock.pixel -= deltaPixel
UpperClock.column -= deltaColumn
LowerClock.pixel += deltaPixel
LowerClock.column += deltaColumn
```

UpperClock and LowerClock are now valid clockmark estimates for the first clockmarks directly in line with the centers of the targets.

Setting Black and White Pixel/Dot Ranges

Before the data can be extracted from the data area, the pixel ranges for black and white dots needs to be ascertained. The minimum and maximum pixels encountered during the search for targets were stored in WhiteMin and BlackMax respectively, but these do not represent valid values for these variables with respect to data extraction. They are merely used for storage convenience. The following pseudocode shows the method of obtaining good values for WhiteMin and BlackMax based on the min & max pixels encountered:

```
MinPixel = WhiteMin
MaxPixel = BlackMax
MidRange = (MinPixel + MaxPixel) / 2
WhiteMin = MaxPixel – 105
BlackMax = MinPixel + 84
```

```
CurrentState = ExtractingBitImage
```

The *ExtractingBitImage* state is one where the data block has already been accurately located via the targets, and bit data is currently being extracted one *dot column* at a time and written to the alternative Artcard bit image. The following of data block clockmarks/borders gives accurate dot recovery regardless of rotation, and thus the segment bounds are ignored. Once the entire data block has been extracted (597 columns of 48 bytes each; 595 columns of data + 2 orientation columns), new segment bounds are calculated for the next data block based on the current position. The state is changed to *LookingForTargets*.

Processing a given dot column involves two tasks:

* The first task is to locate the specific dot column of data via the clockmarks.
* The second task is to run down the dot column gathering the bit values, one bit per dot.

These two tasks can only be undertaken if the data for the column has been read off the alternative Artcard and transferred to DRAM. This can be determined by checking what scanline Process 1 is up to, and comparing it to the clockmark columns. If the dot data is in DRAM we can update the clockmarks and then extract the data from the column before advancing the clockmarks to the estimated value for the next dot column. The process overview is given in the following pseudocode, with specific functions explained hereinafter:

```
finishedBlock = FALSE
if((UpperClock.column < Process1.CurrentScanLine)
```

```
&&
(LowerClock.column < Process1.CurrentScanLine))
{
DetermineAccurateClockMarks()
DetermineDataInfo()
if (CurrentDotColumn >= 0)
                ExtractDataFromColumn()
        AdvanceClockMarks()
        if (CurrentDotColumn == FINAL_COLUMN)
        {
finishedBlock = TRUE
currentState = LookingForTargets
SetBounds(UpperClock.pixel, LowerClock.pixel)
BitImage += 256KB
CurrentByte = 0
TargetsFound = 0
        }
}
return finishedBlock
```

Locating the dot column

A given dot column needs to be located before the dots can be read and the data extracted. This is accomplished by following the clockmarks/borderline along the upper and lower boundaries of the data block. A software equivalent of a phase-locked-loop is used to ensure that even if the clockmarks have been damaged, good estimations of clockmark positions will be made. Fig. 77 illustrates an example data block's top left which corner reveals that there are clockmarks 3 dots high 1166 extending out to the target area, a white row, and then a black border line.

Initially, an estimation of the center of the first black clockmark position is provided (based on the target positions). We use the black border 1168 to achieve an accurate vertical position (pixel), and the clockmark eg. 1166 to get an accurate horizontal position (column). These are reflected in the UpperClock and LowerClock positions.

The clockmark estimate is taken and by looking at the pixel data in its vicinity, the continuous signal is reconstructed and the exact center is determined. Since we have broken out the two dimensions into a clockmark and border, this is a simple one-dimensional process that needs to be performed twice. However, this is only done every second dot column, when there is a black clockmark to register against. For the white clockmarks we simply use the estimate and leave it at that. Alternatively, we could update the pixel coordinate based on the border each dot column (since it is always present). In practice it is sufficient to update both ordinates every other column (with the black clockmarks) since the resolution being worked at is so fine. The process therefore becomes:

// Turn the estimates of the clockmarks into accurate

```
// positions only when there is a black clockmark
// (ie every 2nd dot column, starting from -8)
if (Bit0(CurrentDotColumn) == 0)                    // even column
{
        DetermineAccurateUpperDotCenter()
        DetermineAccurateLowerDotCenter()
}
```

If there is a deviation by more than a given tolerance (MAX_CLOCKMARK_DEVIATION), the found signal is ignored and only deviation from the estimate by the maximum tolerance is allowed. In this respect the functionality is similar to that of a phase-locked loop. Thus DetermineAccurateUpperDotCenter is implemented via the following pseudocode:

```
// Use the estimated pixel position of
// the border to determine where to look for
// a more accurate clockmark center. The clockmark
// is 3 dots high so even if the estimated position
// of the border is wrong, it won't affect the
// fixing of the clockmark position.
MAX_CLOCKMARK_DEVIATION = 0.5
diff                    =                    GetAccurateColumn(UpperClock.column,
                                             UpperClock.pixel+(3*PIXELS_PER_DOT))
diff -= UpperClock.column
if (diff > MAX_CLOCKMARK_DEVIATION)
        diff = MAX_CLOCKMARK_DEVIATION
else
if (diff < -MAX_CLOCKMARK_DEVIATION)
        diff = -MAX_CLOCKMARK_DEVIATION
UpperClock.column += diff

// Use the newly obtained clockmark center to
// determine a more accurate border position.
diff = GetAccuratePixel(UpperClock.column, UpperClock.pixel)
diff -= UpperClock.pixel
if (diff > MAX_CLOCKMARK_DEVIATION)
        diff = MAX_CLOCKMARK_DEVIATION
else
if (diff < -MAX_CLOCKMARK_DEVIATION)
        diff = -MAX_CLOCKMARK_DEVIATION
```

UpperClock.pixel += diff

DetermineAccurateLowerDotCenter is the same, except that the direction from the border to the clockmark is in the negative direction (–3 dots rather than +3 dots).

GetAccuratePixel and GetAccurateColumn are functions that determine an accurate dot center given a coordinate, but only from the perspective of a single dimension. Determining accurate dot centers is a process of signal reconstruction and then finding the location where the minimum signal value is found (this is different to locating a target center, which is locating the *maximum* value of the signal since the target center is white, not black). The method chosen for signal reconstruction/resampling for this application is the Lanczos3 windowed sinc function as previously discussed with reference to Fig. 76.

It may be that the clockmark or border has been damaged in some way – perhaps it has been scratched. If the new center value retrieved by the resampling differs from the estimate by more than a tolerance amount, the center value is only moved by the maximum tolerance. If it is an invalid position, it should be close enough to use for data retrieval, and future clockmarks will resynchronize the position.

Determining the center of the first data dot and the deltas to subsequent dots

Once an accurate UpperClock and LowerClock position has been determined, it is possible to calculate the center of the first data dot (CurrentDot), and the delta amounts to be added to that center position in order to advance to subsequent dots in the column (DataDelta).

The first thing to do is calculate the deltas for the dot column. This is achieved simply by subtracting the UpperClock from the LowerClock, and then dividing by the number of dots between the two points. It is possible to actually multiply by the inverse of the number of dots since it is constant for an alternative Artcard, and multiplying is faster. It is possible to use different constants for obtaining the deltas in pixel and column dimensions. The delta in pixels is the distance between the two borders, while the delta in columns is between the centers of the two clockmarks. Thus the function DetermineDataInfo is two parts. The first is given by the pseudocode:

```
kDeltaColumnFactor = 1 / (DOTS_PER_DATA_COLUMN + 2 + 2 - 1)
kDeltaPixelFactor = 1 / (DOTS_PER_DATA_COLUMN + 5 + 5 - 1)

delta = LowerClock.column - UpperClock.column
DataDelta.column = delta * kDeltaColumnFactor
delta = LowerClock.pixel - UpperClock.pixel
DataDelta.pixel = delta * kDeltaPixelFactor
```

It is now possible to determine the center of the first data dot of the column. There is a distance of 2 dots from the center of the clockmark to the center of the first data dot, and 5 dots from the center of the border to the center of the first data dot. Thus the second part of the function is given by the pseudocode:

```
CurrentDot.column = UpperClock.column + (2*DataDelta.column)
CurrentDot.pixel = UpperClock.pixel + (5*DataDelta.pixel)
```

Running down a dot column

Since the dot column has been located from the phase-locked loop tracking the clockmarks, all that remains is to sample the dot column at the center of each dot down that column. The variable CurrentDot points is determined to the center of the first dot of the current column. We can get to the next dot of the column by simply adding DataDelta (2 additions: 1 for the column ordinate, the other for the pixel ordinate). A sample of the dot at the given coordinate (bi-linear interpolation) is taken, and a pixel value representing the center of the dot is determined. The pixel value is then used to determine the bit value for that dot. However it is possible to use the pixel value in context with the center value for the two surrounding dots on the same dot line to make a better bit judgement.

We can be assured that all the pixels for the dots in the dot column being extracted are currently loaded in DRAM, for if the two ends of the line (clockmarks) are in DRAM, then the dots between those two clockmarks must also be in DRAM. Additionally, the data block height is short enough (only 384 dots high) to ensure that simple deltas are enough to traverse the length of the line. One of the reasons the card is divided into 8 data blocks high is that we cannot make the same rigid guarantee across the entire height of the card that we can about a single data block.

The high level process of extracting a single line of data (48 bytes) can be seen in the following pseudocode. The dataBuffer pointer increments as each byte is stored, ensuring that consecutive bytes and columns of data are stored consecutively.

```
bitCount = 8
curr = 0x00                                    // definitely black
next = GetPixel(CurrentDot)
for (i=0; i < DOTS_PER_DATA_COLUMN; i++)
{
        CurrentDot += DataDelta
        prev = curr
        curr = next
        next = GetPixel(CurrentDot)
        bit = DetermineCenterDot(prev, curr, next)
        byte = (byte << 1) | bit
        bitCount--
        if (bitCount == 0)
        {
                *(BitImage | CurrentByte) = byte
                CurrentByte++
                bitCount = 8
        }
}
```

The GetPixel function takes a dot coordinate (fixed point) and samples 4 CCD pixels to arrive at a center pixel

value via bilinear interpolation.

The DetermineCenterDot function takes the pixel values representing the dot centers to either side of the dot whose bit value is being determined, and attempts to intelligently guess the value of that center dot's bit value. From the generalized blurring curve of Fig. 64 there are three common cases to consider:

* The dot's center pixel value is lower than WhiteMin, and is therefore definitely a black dot. The bit value is therefore definitely 1.

* The dot's center pixel value is higher than BlackMax, and is therefore definitely a white dot. The bit value is therefore definitely 0.

* The dot's center pixel value is somewhere between BlackMax and WhiteMin. The dot may be black, and it may be white. The value for the bit is therefore in question. A number of schemes can be devised to make a reasonable guess as to the value of the bit. These schemes must balance complexity against accuracy, and also take into account the fact that in some cases, there is no guaranteed solution. In those cases where we make a wrong bit decision, the bit's Reed-Solomon symbol will be in error, and must be corrected by the Reed-Solomon decoding stage in Phase 2.

The scheme used to determine a dot's value if the pixel value is between BlackMax and WhiteMin is not too complex, but gives good results. It uses the pixel values of the dot centers to the left and right of the dot in question, using their values to help determine a more likely value for the center dot:

* If the two dots to either side are on the white side of MidRange (an average dot value), then we can guess that if the center dot were white, it would likely be a "definite" white. The fact that it is in the not-sure region would indicate that the dot was black, and had been affected by the surrounding white dots to make the value less sure. The dot value is therefore assumed to be black, and hence the bit value is 1.

* If the two dots to either side are on the black side of MidRange, then we can guess that if the center dot were black, it would likely be a "definite" black. The fact that it is in the not-sure region would indicate that the dot was white, and had been affected by the surrounding black dots to make the value less sure. The dot value is therefore assumed to be white, and hence the bit value is 0.

* If one dot is on the black side of MidRange, and the other dot is on the white side of MidRange, we simply use the center dot value to decide. If the center dot is on the black side of MidRange, we choose black (bit value 1). Otherwise we choose white (bit value 0).

The logic is represented by the following:

```
if (pixel < WhiteMin)                    // definitely black
                bit = 0x01
else
if (pixel > BlackMax)                    // definitely white
                bit = 0x00
else
if ((prev > MidRange) && (next> MidRange))  //prob black
                bit = 0x01
else
```

```
if ((prev < MidRange) && (next < MidRange)) //prob white
                    bit = 0x00
else
if (pixel < MidRange)
                    bit = 0x01
else
                    bit = 0x00
```

From this one can see that using surrounding pixel values can give a good indication of the value of the center dot's state. The scheme described here only uses the dots from the same row, but using a single dot line history (the previous dot line) would also be straightforward as would be alternative arrangements.

Updating clockmarks for the next column

Once the center of the first data dot for the column has been determined, the clockmark values are no longer needed. They are conveniently updated in readiness for the next column after the data has been retrieved for the column. Since the clockmark direction is perpendicular to the traversal of dots down the dot column, it is possible to use the pixel delta to update the column, and subtract the column delta to update the pixel for both clocks:

```
UpperClock.column += DataDelta.pixel
LowerClock.column += DataDelta.pixel
UpperClock.pixel -= DataDelta.column
LowerClock.pixel -= DataDelta.column
```

These are now the *estimates* for the next dot column.

Timing

The timing requirement will be met as long as DRAM utilization does not exceed 100%, and the addition of parallel algorithm timing multiplied by the algorithm DRAM utilization does not exceed 100%. DRAM utilization is specified relative to Process1, which writes each pixel once in a consecutive manner, consuming 9% of the DRAM bandwidth.

The timing as described in this section, shows that the DRAM is easily able to cope with the demands of the alternative Artcard Reader algorithm. The timing bottleneck will therefore be the implementation of the algorithm in terms of logic speed, not DRAM access. The algorithms have been designed however, with simple architectures in mind, requiring a minimum number of logical operations for every memory cycle. From this point of view, as long as the implementation state machine or equivalent CPU/DSP architecture is able to perform as described in the following sub-sections, the target speed will be met.

Locating the targets

Targets are located by reading pixels within the bounds of a pixel column. Each pixel is read once at most. Assuming a run-length encoder that operates fast enough, the bounds on the location of targets is memory access. The accesses will therefore be no worse than the timing for Process 1, which means a 9% utilization of the DRAM bandwidth.

The total utilization of DRAM during target location (including Process1) is therefore 18%, meaning that the target locator will always be catching up to the alternative Artcard image sensor pixel reader.

Processing the targets

The timing for sorting and checking the target numbers is trivial. The finding of better estimates for each of the two target centers involves 12 sets of 12 pixel reads, taking a total of 144 reads. However the fixing of accurate target centers is not trivial, requiring 2 sets of evaluations. Adjusting each target center requires 8 sets of 20 different 6-entry convolution kernels. Thus this totals 8 x 20 x 6 multiply-accumulates = 960. In addition, there are 7 sets of 7 pixels to be retrieved, requiring 49 memory accesses. The total number per target is therefore 144 + 960 + 49 = 1153, which is approximately the same number of pixels in a column of pixels (1152). Thus each target evaluation consumes the time taken by otherwise processing a row of pixels. For two targets we effectively consume the time for 2 columns of pixels.

A target is positively identified on the first pixel column after the target number. Since there are 2 dot columns before the orientation column, there are 6 pixel columns. The Target Location process effectively uses up the first of the pixel columns, but the remaining 5 pixel columns are not processed at all. Therefore the data area can be located in 2/5 of the time available without impinging on any other process time.

The remaining 3/5 of the time available is ample for the trivial task of assigning the ranges for black and white pixels, a task that may take a couple of machine cycles at most.

Extracting data

There are two parts to consider in terms of timing:

* Getting accurate clockmarks and border values
* Extracting dot values

Clockmarks and border values are only gathered every second dot column. However each time a clockmark estimate is updated to become more accurate, 20 different 6-entry convolution kernels must be evaluated. On average there are 2 of these per dot column (there are 4 every 2 dot-columns). Updating the pixel ordinate based on the border only requires 7 pixels from the same pixel scanline. Updating the column ordinate however, requires 7 pixels from different columns, hence different scanlines. Assuming worst case scenario of a cache miss for each scanline entry and 2 cache misses for the pixels in the same scanline, this totals 8 cache misses.

Extracting the dot information involves only 4 pixel reads per dot (rather than the average 9 that define the dot). Considering the data area of 1152 pixels (384 dots), at best this will save 72 cache reads by only reading 4 pixel dots instead of 9. The worst case is a rotation of 1° which is a single pixel translation every 57 pixels, which gives only slightly worse savings.

It can then be safely said that, at worst, we will be reading fewer cache lines less than that consumed by the pixels in the data area. The accesses will therefore be no worse than the timing for Process 1, which implies a 9% utilization of the DRAM bandwidth.

The total utilization of DRAM during data extraction (including Process1) is therefore 18%, meaning that the data extractor will always be catching up to the alternative Artcard image sensor pixel reader. This has implications for the Process Targets process in that the processing of targets can be performed by a relatively inefficient method if necessary, yet still catch up quickly during the extracting data process.

Phase 2 – Decode Bit Image

Phase 2 is the non-real-time phase of alternative Artcard data recovery algorithm. At the start of Phase 2 a bit image has been extracted from the alternative Artcard. It represents the bits read from the data regions of the alternative Artcard. Some of the bits will be in error, and perhaps the entire data is rotated 180° because the alternative Artcard was rotated when inserted. Phase 2 is concerned with reliably extracting the original data from this encoded bit image. There are basically 3 steps to be carried out as illustrated in Fig. 79:

* Reorganize the bit image, reversing it if the alternative Artcard was inserted backwards
* Unscramble the encoded data
* Reed-Solomon decode the data from the bit image

Each of the 3 steps is defined as a separate process, and performed consecutively, since the output of one is required as the input to the next. It is straightforward to combine the first two steps into a single process, but for the purposes of clarity, they are treated separately here.

From a data/process perspective, Phase 2 has the structure as illustrated in Fig. 80.

The timing of Processes 1 and 2 are likely to be negligible, consuming less than 1/1000th of a second between them. Process 3 (Reed Solomon decode) consumes approximately 0.32 seconds, making this the total time required for Phase 2.

Reorganize the bit image, reversing it if necessary

The bit map in DRAM now represents the retrieved data from the alternative Artcard. However the bit image is not contiguous. It is broken into 64 32k chunks, one chunk for each data block. Each 32k chunk contains only 28,656 useful bytes:

48 bytes from the leftmost Orientation Column

28560 bytes from the data region proper

48 bytes from the rightmost Orientation Column

4112 unused bytes

The 2MB buffer used for pixel data (stored by Process 1 of Phase 1) can be used to hold the reorganized bit image, since pixel data is not required during Phase 2. At the end of the reorganization, a correctly oriented contiguous bit image will be in the 2MB pixel buffer, ready for Reed-Solomon decoding.

If the card is correctly oriented, the leftmost Orientation Column will be white and the rightmost Orientation Column will be black. If the card has been rotated 180°, then the leftmost Orientation Column will be black and the rightmost Orientation Column will be white.

A simple method of determining whether the card is correctly oriented or not, is to go through each data block, checking the first and last 48 bytes of data until a block is found with an overwhelming ratio of black to white bits. The following pseudocode demonstrates this, returning TRUE if the card is correctly oriented, and FALSE if it is not:

```
totalCountL = 0
totalCountR = 0
for (i=0; i<64; i++)
{
blackCountL = 0
```

```
blackCountR = 0
currBuff = dataBuffer
for (j=0; j<48; j++)
{
blackCountL += CountBits(*currBuff)
currBuff++
        }
currBuff += 28560
for (j=0; j<48; j++)
{
blackCountR += CountBits(*currBuff)
currBuff++
        }
dataBuffer += 32k
if (blackCountR > (blackCountL * 4))
                        return TRUE
        if (blackCountL > (blackCountR * 4))
                        return FALSE
        totalCountL += blackCountL
        totalCountR += blackCountR
}
return (totalCountR > totalCountL)
```

The data must now be reorganized, based on whether the card was oriented correctly or not. The simplest case is that the card is correctly oriented. In this case the data only needs to be moved around a little to remove the orientation columns and to make the entire data contiguous. This is achieved very simply *in situ*, as described by the following pseudocode:

```
DATA_BYTES_PER_DATA_BLOCK = 28560
to = dataBuffer
from = dataBuffer + 48)              // left orientation column
for (i=0; i<64; i++)
{
BlockMove(from, to, DATA_BYTES_PER_DATA_BLOCK)
from += 32k
to += DATA_BYTES_PER_DATA_BLOCK
}
```

The other case is that the data actually needs to be reversed. The algorithm to reverse the data is quite simple,

but for simplicity, requires a 256-byte table *Reverse* where the value of *Reverse[N]* is a bit-reversed N.

```
DATA_BYTES_PER_DATA_BLOCK = 28560
to = outBuffer
for (i=0; i<64; i++)
{
from = dataBuffer + (i * 32k)
from += 48                                  // skip orientation column
from += DATA_BYTES_PER_DATA_BLOCK – 1    // end of block
for (j=0; j < DATA_BYTES_PER_DATA_BLOCK; j++)
{
*to++ = Reverse[*from]
from--
        }
}
```

The timing for either process is negligible, consuming less than 1/1000th of a second:

* 2MB contiguous reads (2048/16 x 12ns = 1,536ns)
* 2MB effectively contiguous byte writes (2048/16 x 12ns = 1,536ns)

Unscramble the encoded image

The bit image is now 1,827,840 contiguous, correctly oriented, but scrambled bytes. The bytes must be unscrambled to create the 7,168 Reed-Solomon blocks, each 255 bytes long. The unscrambling process is quite straightforward, but requires a separate output buffer since the unscrambling cannot be performed *in situ*. Fig. 80 illustrates the unscrambling process conducted memory

The following pseudocode defines how to perform the unscrambling process:

```
groupSize = 255
numBytes = 1827840;
inBuffer = scrambledBuffer;
outBuffer = unscrambledBuffer;

for (i=0; i<groupSize; i++)
        for (j=i; j<numBytes; j+=groupSize)
                outBuffer[j] = *inBuffer++
```

The timing for this process is negligible, consuming less than 1/1000th of a second:

* 2MB contiguous reads (2048/16 x 12ns = 1,536ns)
* 2MB non-contiguous byte writes (2048 x 12ns = 24,576ns)

At the end of this process the unscrambled data is ready for Reed-Solomon decoding.

Reed Solomon decode

The final part of reading an alternative Artcard is the Reed-Solomon decode process, where approximately 2MB of unscrambled data is decoded into approximately 1MB of valid alternative Artcard data.

The algorithm performs the decoding one Reed-Solomon block at a time, and can (if desired) be performed in situ, since the encoded block is larger than the decoded block, and the redundancy bytes are stored after the data bytes.

The first 2 Reed-Solomon blocks are control blocks, containing information about the size of the data to be extracted from the bit image. This meta-information must be decoded first, and the resultant information used to decode the data proper. The decoding of the data proper is simply a case of decoding the data blocks one at a time. Duplicate data blocks can be used if a particular block fails to decode.

The highest level of the Reed-Solomon decode is set out in pseudocode:

```
// Constants for Reed Solomon decode
sourceBlockLength = 255;
destBlockLength = 127;
numControlBlocks = 2;

// Decode the control information
if (! GetControlData(source, destBlocks, lastBlock))
        return error
destBytes = ((destBlocks-1) * destBlockLength) + lastBlock
offsetToNextDuplicate = destBlocks * sourceBlockLength

// Skip the control blocks and position at data
source += numControlBlocks * sourceBlockLength

// Decode each of the data blocks, trying
// duplicates as necessary
blocksInError = 0;
for (i=0; i<destBlocks; i++)
{
        found = DecodeBlock(source, dest);
if (! found)
        {
duplicate = source + offsetToNextDuplicate
while ((! found) && (duplicate<sourceEnd))
        {
found = DecodeBlock(duplicate, dest)
duplicate += offsetToNextDuplicate
        }
```

```
        }
        if (! found)
                        blocksInError++

        source += sourceBlockLength
        dest += destBlockLength
}
return destBytes and blocksInError
```

DecodeBlock is a standard Reed Solomon block decoder using m=8 and t=64.

The GetControlData function is straightforward as long as there are no decoding errors. The function simply calls DecodeBlock to decode one control block at a time until successful. The control parameters can then be extracted from the first 3 bytes of the decoded data (destBlocks is stored in the bytes 0 and 1, and lastBlock is stored in byte 2). If there are decoding errors the function must traverse the 32 sets of 3 bytes and decide which is the most likely set value to be correct. One simple method is to find 2 consecutive equal copies of the 3 bytes, and to declare those values the correct ones. An alternative method is to count occurrences of the different sets of 3 bytes, and announce the most common occurrence to be the correct one.

The time taken to Reed-Solomon decode depends on the implementation. While it is possible to use a dedicated core to perform the Reed-Solomon decoding process (such as LSI Logic's L64712), it is preferable to select a CPU/DSP combination that can be more generally used throughout the embedded system (usually to do something with the decoded data) depending on the application. Of course decoding time must be fast enough with the CPU/DSP combination.

The L64712 has a throughput of 50Mbits per second (around 6.25MB per second), so the time is bound by the speed of the Reed-Solomon decoder rather than the maximum 2MB read and 1 MB write memory access time. The time taken in the worst case (all 2MB requires decoding) is thus 2/6.25s = approximately 0.32 seconds. Of course, many further refinements are possible including the following:

The blurrier the reading environment, the more a given dot is influenced by the surrounding dots. The current reading algorithm of the preferred embodiment has the ability to use the surrounding dots in the same column in order to make a better decision about a dot's value. Since the previous column's dots have already been decoded, a previous column dot history could be useful in determining the value of those dots whose pixel values are in the *not-sure* range.

A different possibility with regard to the initial stage is to remove it entirely, make the initial bounds of the data blocks larger than necessary and place greater intelligence into the ProcessingTargets functions. This may reduce overall complexity. Care must be taken to maintain data block independence.

Further the control block mechanism can be made more robust:

* The control block could be the first and last blocks rather than make them contiguous (as is the case now). This may give greater protection against certain pathological damage scenarios.

* The second refinement is to place an additional level of redundancy/error detection into the control block structure to be used if the Reed-Solomon decode step fails. Something as simple as parity might improve the likelihood of control information if the Reed-Solomon stage fails.

Phase 5 Running the Vark script

The overall time taken to read the Artcard 9 and decode it is therefore approximately 2.15 seconds. The apparent delay to the user is actually only 0.65 seconds (the total of Phases 3 and 4), since the Artcard stops moving after 1.5 seconds.

Once the Artcard is loaded, the Artvark script must be interpreted, Rather than run the script immediately, the script is only run upon the pressing of the 'Print' button 13 (Fig. 1). The taken to run the script will vary depending on the complexity of the script, and must be taken into account for the perceived delay between pressing the print button and the actual print button and the actual printing.

As noted previously, the VLIW processor 74 is a digital processing system that accelerates computationally expensive Vark functions. The balance of functions performed in software by the CPU core 72, and in hardware by the VLIW processor 74 will be implementation dependent. The goal of the VLIW processor 74 is to assist all Artcard styles to execute in a time that does not seem too slow to the user. As CPUs become faster and more powerful, the number of functions requiring hardware acceleration becomes less and less. The VLIW processor has a microcoded ALU sub-system that allows general hardware speed up of the following time-critical functions.

1) Image access mechanisms for general software processing
2) Image convolver.
3) Data driven image warper
4) Image scaling
5) Image tessellation
6) Affine transform
7) Image compositor
8) Color space transform
9) Histogram collector
10) Illumination of the Image
11) Brush stamper
12) Histogram collector
13) CCD image to internal image conversion
14) Construction of image pyramids (used by warper & for brushing)

The following table summarizes the time taken for each Vark operation if implemented in the ALU model. The method of implementing the function using the ALU model is described hereinafter.

Operation	Speed of Operation	1500 * 1000 image	
		1 channel	3 channels
Image composite	1 cycle per output pixel	0.015 s	0.045 s
Image convolve	k/3 cycles per output pixel (k = kernel size)		
	3x3 convolve	0.045 s	0.135 s
	5x5 convolve	0.125 s	0.375 s
	7x7 convolve	0.245 s	0.735 s
Image warp	8 cycles per pixel	0.120 s	0.360 s
Histogram collect	2 cycles per pixel	0.030 s	0.090 s
Image Tessellate	1/3 cycle per pixel	0.005 s	0.015 s
Image sub-pixel Translate	1 cycle per output pixel	-	-
Color lookup replace	½ cycle per pixel	0.008 s	0.023
Color space transform	8 cycles per pixel	0.120 s	0.360 s
Convert CCD image to internal image (including color convert & scale)	4 cycles per output pixel	0.06 s	0.18 s
Construct image pyramid	1 cycle per input pixel	0.015 s	0.045 s
Scale	Maximum of: 2 cycles per input pixel 2 cycles per output pixel 2 cycles per output pixel (scaled in X only)	0.015 s (minimum)	0.045 s (minimum)
Affine transform	2 cycles per output pixel	0.03 s	0.09 s
Brush rotate/translate and composite	?		
Tile Image	4-8 cycles per output pixel	0.015 s to 0.030 s	0.060 s to 0.120 s to for 4 channels (Lab, texture)
Illuminate image	Cycles per pixel		
Ambient only	½	0.008 s	0.023 s
Directional light	1	0.015 s	0.045 s
Directional (bm)	6	0.09 s	0.27 s

Omni light	6	0.09 s	0.27 s
Omni (bm)	9	0.137 s	0.41 s
Spotlight	9	0.137 s	0.41 s
Spotlight (bm)	12	0.18 s	0.54 s
(bm) = bumpmap			

For example, to convert a CCD image, collect histogram & perform lookup-color replacement (for image enhancement) takes: 9+2+0.5 cycles per pixel, or 11.5 cycles. For a 1500 x 1000 image that is 172,500,000, or approximately 0.2 seconds per component, or 0.6 seconds for all 3 components. Add a simple warp, and the total comes to 0.6 + 0.36, almost 1 second.

Image Convolver

A convolve is a weighted average around a center pixel. The average may be a simple sum, a sum of absolute values, the absolute value of a sum, or sums truncated at 0.

The image convolver is a general-purpose convolver, allowing a variety of functions to be implemented by varying the values within a variable-sized coefficient kernel. The kernel sizes supported are 3x3, 5x5 and 7x7 only.

Turning now to Fig. 82, there is illustrated 340 an example of the convolution process. The pixel component values fed into the convolver process 341 come from a Box Read Iterator 342. The Iterator 342 provides the image data row by row, and within each row, pixel by pixel. The output from the convolver 341 is sent to a Sequential Write Iterator 344, which stores the resultant image in a valid image format.

A Coefficient Kernel 346 is a lookup table in DRAM. The kernel is arranged with coefficients in the same order as the Box Read Iterator 342. Each coefficient entry is 8 bits. A simple Sequential Read Iterator can be used to index into the kernel 346 and thus provide the coefficients. It simulates an image with ImageWidth equal to the kernel size, and a Loop option is set so that the kernel would continuously be provided.

One form of implementation of the convolve process on an ALU unit is as illustrated in Fig. 81.The following constants are set by software:

Constant	Value
K_1	Kernel size (9, 25, or 49)

The control logic is used to count down the number of multiply/adds per pixel. When the count (accumulated in $Latch_2$) reaches 0, the control signal generated is used to write out the current convolve value (from $Latch_1$) and to reset the count. In this way, one control logic block can be used for a number of parallel convolve streams.

Each cycle the multiply ALU can perform one multiply/add to incorporate the appropriate part of a pixel. The number of cycles taken to sum up all the values is therefore the number of entries in the kernel. Since this is compute bound, it is appropriate to divide the image into multiple sections and process them in parallel on different ALU units.

On a 7x7 kernel, the time taken for each pixel is 49 cycles, or 490ns. Since each cache line holds 32 pixels, the time available for memory access is 12,740ns. ((32-7+1) x 490ns). The time taken to read 7 cache lines and write 1 is worse case 1,120ns (8*140ns, all accesses to same DRAM bank). Consequently it is possible to process up to 10

pixels in parallel given unlimited resources. Given a limited number of ALUs it is possible to do at best 4 in parallel. The time taken to therefore perform the convolution using a 7x7 kernel is 0.18375 seconds (1500*1000 * 490ns / 4 = 183,750,000ns).

On a 5x5 kernel, the time taken for each pixel is 25 cycles, or 250ns. Since each cache line holds 32 pixels, the time available for memory access is 7,000ns. ((32-5+1) x 250ns). The time taken to read 5 cache lines and write 1 is worse case 840ns (6 * 140ns, all accesses to same DRAM bank). Consequently it is possible to process up to 7 pixels in parallel given unlimited resources. Given a limited number of ALUs it is possible to do at best 4. The time taken to therefore perform the convolution using a 5x5 kernel is 0.09375 seconds (1500*1000 * 250ns / 4 = 93,750,000ns).

On a 3x3 kernel, the time taken for each pixel is 9 cycles, or 90ns. Since each cache line holds 32 pixels, the time available for memory access is 2,700ns. ((32-3+1) x 90ns). The time taken to read 3 cache lines and write 1 is worse case 560ns (4 * 140ns, all accesses to same DRAM bank). Consequently it is possible to process up to 4 pixels in parallel given unlimited resources. Given a limited number of ALUs and Read/Write Iterators it is possible to do at best 4. The time taken to therefore perform the convolution using a 3x3 kernel is 0.03375 seconds (1500*1000 * 90ns / 4 = 33,750,000ns).

Consequently each output pixel takes kernelsize/3 cycles to compute. The actual timings are summarised in the following table:

Kernel size	**Time taken to calculate output pixel**	**Time to process 1 channel at 1500x1000**	**Time to Process 3 channels at 1500x1000**
3x3 (9)	3 cycles	0.045 seconds	0.135 seconds
5x5 (25)	8 1/3 cycles	0.125 seconds	0.375 seconds
7x7 (49)	16 1/3 cycles	0.245 seconds	0.735 seconds

Image Compositor

Compositing is to add a foreground image to a background image using a matte or a channel to govern the appropriate proportions of background and foreground in the final image. Two styles of compositing are preferably supported, regular compositing and associated compositing. The rules for the two styles are:

Regular composite: new Value = Foreground + (Background – Foreground) a

Associated composite: new value = Foreground + (1- a) Background

The difference then, is that with associated compositing, the foreground has been pre-multiplied with the matte, while in regular compositing it has not. An example of the compositing process is as illustrated in Fig. 83.

The alpha channel has values from 0 to 255 corresponding to the range 0 to 1.

Regular Composite

A regular composite is implemented as:

Foreground + (Background - Foreground) * • • / 255

The division by X/255 is approximated by 257X/65536. An implementation of the compositing process is shown in more detail in Fig. 84, where the following constant is set by software:

Constant	Value
K_1	257

Since 4 Iterators are required, the composite process takes 1 cycle per pixel, with a utilization of only half of the ALUs. The composite process is only run on a single channel. To composite a 3-channel image with another, the compositor must be run 3 times, once for each channel.

The time taken to composite a full size single channel is 0.015s (1500 * 1000 * 1 * 10ns), or 0.045s to composite all 3 channels.

To approximate a divide by 255 it is possible to multiply by 257 and then divide by 65536. It can also be achieved by a single add (256 * x + x) and ignoring (except for rounding purposes) the final 16 bits of the result.

As shown in Fig. 42, the compositor process requires 3 Sequential Read Iterators 351-353 and 1 Sequential Write Iterator 355, and is implemented as microcode using a Adder ALU in conjunction with a multiplier ALU. Composite time is 1 cycle (10ns) per-pixel. Different microcode is required for associated and regular compositing, although the average time per pixel composite is the same.

The composite process is only run on a single channel. To composite one 3-channel image with another, the compositor must be run 3 times, once for each channel. As the a channel is the same for each composite, it must be read each time. However it should be noted that to transfer (read or write) 4 x 32 byte cache-lines in the best case takes 320ns. The pipeline gives an average of 1 cycle per pixel composite, taking 32 cycles or 320ns (at 100MHz) to composite the 32 pixels, so the a channel is effectively read for free. An entire channel can therefore be composited in:

1500/32 * 1000 * 320ns = 15,040,000ns = 0.015seconds.

The time taken to composite a full size 3 channel image is therefore 0.045 seconds.

Construct Image Pyramid

Several functions, such as warping, tiling and brushing, require the average value of a given area of pixels. Rather than calculate the value for each area given, these functions preferably make use of an image pyramid. As illustrated previously in Fig. 33, an image pyramid 360 is effectively a multi-resolution pixelmap. The original image is a 1:1 representation. Sub-sampling by 2:1 in each dimension produces an image ¼ the original size. This process continues until the entire image is represented by a single pixel.

An image pyramid is constructed from an original image, and consumes 1/3 of the size taken up by the original image (1/4 + 1/16 + 1/64 + ...). For an original image of 1500 x 1000 the corresponding image pyramid is approximately ½ MB

The image pyramid can be constructed via a 3x3 convolve performed on 1 in 4 input image pixels advancing the center of the convolve kernel by 2 pixels each dimension. A 3x3 convolve results in higher accuracy than simply averaging 4 pixels, and has the added advantage that coordinates on different pyramid levels differ only by shifting 1 bit per level.

The construction of an entire pyramid relies on a software loop that calls the pyramid level construction function once for each level of the pyramid.

The timing to produce 1 level of the pyramid is 9/4 * 1/4 of the resolution of the input image since we are generating an image 1/4 of the size of the original. Thus for a 1500 x 1000 image:

Timing to produce level 1 of pyramid = 9/4 * 750 * 500 = 843, 750 cycles

Timing to produce level 2 of pyramid = 9/4 * 375 * 250 = 210, 938 cycles

Timing to produce level 3 of pyramid = 9/4 * 188 * 125 = 52, 735 cycles

Etc.

The total time is 3/4 cycle per original image pixel (image pyramid is 1/3 of original image size, and each pixel takes 9/4 cycles to be calculated, i.e. 1/3 * 9/4 = 3/4). In the case of a 1500 x 1000 image is 1,125,000 cycles (at 100MHz), or 0.011 seconds. This timing is for a single color channel, 3 color channels require 0.034 seconds processing time.

General Data Driven Image Warper

The ACP 31 is able to carry out image warping manipulations of the input image. The principles of image warping are well-known in theory. One thorough text book reference on the process of warping is "Digital Image Warping" by George Wolberg published in 1990 by the IEEE Computer Society Press, Los Alamitos, California. The warping process utilizes a warp map which forms part of the data fed in via Artcard 9. The warp map can be arbitrarily dimensioned in accordance with requirements and provides information of a mapping of input pixels to output pixels. Unfortunately, the utilization of arbitrarily sized warp maps presents a number of problems which must be solved by the image warper.

Turning to Fig. 85, a warp map 365, having dimensions AxB comprises array values of a certain magnitude (for example 8 bit values from 0 - 255) which set out the coordinate of a theoretical input image which maps to the corresponding "theoretical" output image having the same array coordinate indices. Unfortunately, any output image eg. 366 will have its own dimensions CxD which may further be totally different from an input image which may have its own dimensions ExF. Hence, it is necessary to facilitate the remapping of the warp map 365 so that it can be utilised for output image 366 to determine, for each output pixel, the corresponding area or region of the input image 367 from which the output pixel color data is to be constructed. For each output pixel in output image 366 it is necessary to first determine a corresponding warp map value from warp map 365. This may include the need to bilinearly interpolate the surrounding warp map values when an output image pixel maps to a fractional position within warp map table 365. The result of this process will give the location of an input image pixel in a "theoretical" image which will be dimensioned by the size of each data value within the warp map 365. These values must be re-scaled so as to map the theoretical image to the corresponding actual input image 367.

In order to determine the actual value and output image pixel should take so as to avoid aliasing effects, adjacent output image pixels should be examined to determine a region of input image pixels 367 which will contribute to the final output image pixel value. In this respect, the image pyramid is utilised as will become more apparent hereinafter.

The image warper performs several tasks in order to warp an image.

- Scale the warp map to match the output image size.
- Determine the span of the region of input image pixels represented in each output pixel.
- Calculate the final output pixel value via tri-linear interpolation from the input image pyramid

Scale warp map

As noted previously, in a data driven warp, there is the need for a warp map that describes, for each output pixel, the center of a corresponding input image map. Instead of having a single warp map as previously described, containing interleaved x and y value information, it is possible to treat the X and Y coordinates as separate channels.

Consequently, preferably there are two warp maps: an X warp map showing the warping of X coordinates, and a Y warp map, showing the warping of the Y coordinates. As noted previously, the warp map 365 can have a different spatial resolution than the image they being scaled (for example a 32 x 32 warp-map 365 may adequately describe a warp for a 1500 x 1000 image 366). In addition, the warp maps can be represented by 8 or 16 bit values that correspond to the size of the image being warped.

There are several steps involved in producing points in the input image space from a given warp map:

1. Determining the corresponding position in the warp map for the output pixel
2. Fetch the values from the warp map for the next step (this can require scaling in the resolution domain if the warp map is only 8 bit values)
3. Bi-linear interpolation of the warp map to determine the actual value
4. Scaling the value to correspond to the input image domain

The first step can be accomplished by multiplying the current X/Y coordinate in the output image by a scale factor (which can be different in X & Y). For example, if the output image was 1500 x 1000, and the warp map was 150 x 100, we scale both X & Y by 1/10.

Fetching the values from the warp map requires access to 2 Lookup tables. One Lookup table indexes into the X warp-map, and the other indexes into the Y warp-map. The lookup table either reads 8 or 16 bit entries from the lookup table, but always returns 16 bit values (clearing the high 8 bits if the original values are only 8 bits).

The next step in the pipeline is to bi-linearly interpolate the looked-up warp map values.

Finally the result from the bi-linear interpolation is scaled to place it in the same domain as the image to be warped. Thus, if the warp map range was 0-255, we scale X by 1500/255, and Y by 1000/255.

The interpolation process is as illustrated in Fig. 86 with the following constants set by software:

Constant	**Value**
K_1	Xscale (scales 0-ImageWidth to 0-WarpmapWidth)
K_2	Yscale (scales 0-ImageHeight to 0-WarpmapHeight)
K_3	XrangeScale (scales warpmap range (eg 0-255) to 0-ImageWidth)
K_4	YrangeScale (scales warpmap range (eg 0-255) to 0-ImageHeight)

The following lookup table is used:

Lookup	**Size**	**Details**
LU_1 and LU_2	WarpmapWidth x WarpmapHeight	Warpmap lookup. Given [X,Y] the 4 entries required for bi-linear interpolation are returned. Even if entries are only 8 bit, they are returned as 16 bit (high 8 bits 0). Transfer time is 4 entries at 2 bytes per entry. Total time is 8 cycles as 2 lookups are used.

Span calculation

The points from the warp map 365 locate centers of pixel regions in the input image 367. The distance between input image pixels of adjacent output image pixels will indicate the size of the regions, and this distance can be approximated via a span calculation.

Turning to Fig. 87, for a given current point in the warp map P1, the previous point on the same line is called P0, and the previous line's point at the same position is called P2. We determine the absolute distance in X & Y between P1 and P0, and between P1 and P2. The maximum distance in X or Y becomes the span which will be a square approximation of the actual shape.

Preferably, the points are processed in a vertical strip output order, P0 is the previous point on the same line within a strip, and when P1 is the first point on line within a strip, then PO refers to the last point in the previous strip's corresponding line. P2 is the previous line's point in the same strip, so it can be kept in a 32-entry history buffer. The basic of the calculate span process are as illustrated in Fig. 88 with the details of the process as illustrated in Fig. 89.

The following DRAM FIFO is used:

Lookup	**Size**	**Details**
$FIFO_1$	8 ImageWidth bytes. [ImageWidth x 2 entries at 32 bits per entry]	P2 history/lookup (both X & Y in same FIFO) P1 is put into the FIFO and taken out again at the same pixel on the following row as P2. Transfer time is 4 cycles (2 x 32 bits, with 1 cycle per 16 bits)

Since a 32 bit precision span history is kept, in the case of a 1500 pixel wide image being warped 12,000 bytes temporary storage is required.

Calculation of the span 364 uses 2 Adder ALUs (1 for span calculation, 1 for looping and counting for P0 and P2 histories) takes 7 cycles as follows:

Cycle	Action
1	$A = ABS(P1_x - P2_x)$ Store $P1_x$ in $P2_x$ history
2	$B = ABS(P1_x - P0_x)$ Store $P1_x$ in $P0_x$ history
3	$A = MAX(A, B)$
4	$B = ABS(P1_y - P2_y)$ Store $P1_y$ in $P2_y$ history
5	$A = MAX(A, B)$
6	$B = ABS(P1_y - P0_y)$ Store $P1_y$ in $P0_y$ history
7	$A = MAX(A, B)$

The history buffers 365, 366 are cached DRAM. The 'Previous Line' (for P2 history) buffer 366 is 32 entries of span-precision. The 'Previous Point' (for P0 history). Buffer 365 requires 1 register that is used most of the time (for calculation of points 1 to 31 of a line in a strip), and a DRAM buffered set of history values to be used in the calculation of point 0 in a strip's line.

32 bit precision in span history requires 4 cache lines to hold P2 history, and 2 for P0 history. P0's history is only written and read out once every 8 lines of 32 pixels to a temporary storage space of (ImageHeight*4) bytes. Thus a 1500 pixel high image being warped requires 6000 bytes temporary storage, and a total of 6 cache lines.

Tri-linear interpolation

Having determined the center and span of the area from the input image to be averaged, the final part of the warp process is to determine the value of the output pixel. Since a single output pixel could theoretically be represented by the entire input image, it is potentially too time-consuming to actually read and average the specific area of the input image contributing to the output pixel. Instead, it is possible to approximate the pixel value by using an image pyramid of the input image.

If the span is 1 or less, it is necessary only to read the original image's pixels around the given coordinate, and perform bi-linear interpolation. If the span is greater than 1, we must read two appropriate levels of the image pyramid and perform tri-linear interpolation. Performing linear interpolation between two levels of the image pyramid is not strictly correct, but gives acceptable results (it errs on the side of blurring the resultant image).

Turning to Fig. 90, generally speaking, for a given span 's', it is necessary to read image pyramid levels given by ln_2s (370) and ln_2s+1 (371). Ln_2s is simply decoding the highest set bit of s. We must bi-linear interpolate to determine the value for the pixel value on each of the two levels 370,371 of the pyramid, and then interpolate between levels.

As shown in Fig. 91, it is necessary to first interpolate in X and Y for each pyramid level before interpolating between the pyramid levels to obtain a final output value 373.

The image pyramid address mode issued to generate addresses for pixel coordinates at (x, y) on pyramid level

s & s+1. Each level of the image pyramid contains pixels sequential in x. Hence, reads in x are likely to be cache hits.

Reasonable cache coherence can be obtained as local regions in the output image are typically locally coherent in the input image (perhaps at a different scale however, but coherent within the scale). Since it is not possible to know the relationship between the input and output images, we ensure that output pixels are written in a vertical strip (via a Vertical-Strip Iterator) in order to best make use of cache coherence.

Tri-linear interpolation can be completed in as few as 2 cycles on average using 4 multiply ALUs and all 4 adder ALUs as a pipeline and assuming no memory access required. But since all the interpolation values are derived from the image pyramids, interpolation speed is completely dependent on cache coherence (not to mention the other units are busy doing warp-map scaling and span calculations). As many cache lines as possible should therefore be available to the image-pyramid reading. The best speed will be 8 cycles, using 2 Multiply ALUs.

The output pixels are written out to the DRAM via a Vertical-Strip Write Iterator that uses 2 cache lines. The speed is therefore limited to a minimum of 8 cycles per output pixel. If the scaling of the warp map requires 8 or fewer cycles, then the overall speed will be unchanged. Otherwise the throughput is the time taken to scale the warp map. In most cases the warp map will be scaled up to match the size of the photo.

Assuming a warp map that requires 8 or fewer cycles per pixel to scale, the time taken to convert a single color component of image is therefore 0.12s (1500 * 1000 * 8 cycles * 10ns per cycle).

Histogram Collector

The histogram collector is a microcode program that takes an image channel as input, and produces a histogram as output. Each of a channel's pixels has a value in the range 0-255. Consequently there are 256 entries in the histogram table, each entry 32 bits - large enough to contain a count of an entire 1500x1000 image.

As shown in Fig. 92, since the histogram represents a summary of the entire image, a Sequential Read Iterator 378 is sufficient for the input. The histogram itself can be completely cached, requiring 32 cache lines (1K).

The microcode has two passes: an initialization pass which sets all the counts to zero, and then a "count" stage that increments the appropriate counter for each pixel read from the image. The first stage requires the Address Unit and a single Adder ALU, with the address of the histogram table 377 for initialising.

Relative Microcode Address	**Address Unit** **A = Base address of histogram**	**Adder Unit 1**
0	Write 0 to A + (Adder1.Out1 << 2)	Out1 = A A = A – 1 BNZ 0
1	Rest of processing	Rest of processing

The second stage processes the actual pixels from the image, and uses 4 Adder ALUs:

	Adder 1	Adder 2	Adder 3	Adder 4	Address Unit
1	A = 0			A = -1	
2 BZ 2	Out1 = A A = pixel	A = Adder1.Out1 Z = pixel – Adder1.Out1	A = Adr.Out1	A = A + 1	Out1 = Read 4 bytes from: (A + (Adder1.Out1 << 2))
3		Out1 = A	Out1 = A	Out1 = A A = Adder3.Out1	Write Adder4.Out1 to: (A + (Adder 2.Out << 2)
4					Write Adder4.Out1 to: (A + (Adder 2.Out << 2) Flush caches

The Zero flag from Adder2 cycle 2 is used to stay at microcode address 2 for as long as the input pixel is the same. When it changes, the new count is written out in microcode address 3, and processing resumes at microcode address 2. Microcode address 4 is used at the end, when there are no more pixels to be read.

Stage 1 takes 256 cycles, or 2560ns. Stage 2 varies according to the values of the pixels. The worst case time for lookup table replacement is 2 cycles per image pixel if every pixel is not the same as its neighbor. The time taken for a single color lookup is 0.03s (1500 x 1000 x 2 cycle per pixel x 10ns per cycle = 30,000,000ns). The time taken for 3 color components is 3 times this amount, or 0.09s.

Color Transform

Color transformation is achieved in two main ways:

Lookup table replacement

Color space conversion

Lookup Table Replacement

As illustrated in Fig. 86, one of the simplest ways to transform the color of a pixel is to encode an arbitrarily complex transform function into a lookup table 380. The component color value of the pixel is used to lookup 381 the new component value of the pixel. For each pixel read from a Sequential Read Iterator, its new value is read from the New Color Table 380, and written to a Sequential Write Iterator 383. The input image can be processed simultaneously in two halves to make effective use of memory bandwidth. The following lookup table is used:

Lookup	Size	Details
LU_1	256 entries 8 bits per entry	Replacement[X] Table indexed by the 8 highest significant bits of X. Resultant 8 bits treated as fixed point 0:8

The total process requires 2 Sequential Read Iterators and 2 Sequential Write iterators. The 2 New Color Tables require 8 cache lines each to hold the 256 bytes (256 entries of 1 byte).

The average time for lookup table replacement is therefore ½ cycle per image pixel. The time taken for a

single color lookup is 0.0075s (1500 x 1000 x ½ cycle per pixel x 10ns per cycle = 7,500,000ns). The time taken for 3 color components is 3 times this amount, or 0.0225s. Each color component has to be processed one after the other under control of software.

Color Space Conversion

Color Space conversion is only required when moving between color spaces. The CCD images are captured in RGB color space, and printing occurs in CMY color space, while clients of the ACP 31 likely process images in the Lab color space. All of the input color space channels are typically required as input to determine each output channel's component value. Thus the logical process is as illustrated 385 in Fig. 94.

Simply, conversion between Lab, RGB, and CMY is fairly straightforward. However the individual color profile of a particular device can vary considerably. Consequently, to allow future CCDs, inks, and printers, the ACP 31 performs color space conversion by means of tri-linear interpolation from color space conversion lookup tables.

Color coherence tends to be area based rather than line based. To aid cache coherence during tri-linear interpolation lookups, it is best to process an image in vertical strips. Thus the read 386-388 and write 389 iterators would be Vertical-Strip Iterators.

Tri-linear color space conversion

For each output color component, a single 3D table mapping the input color space to the output color component is required. For example, to convert CCD images from RGB to Lab, 3 tables calibrated to the physical characteristics of the CCD are required:

RGB->L

RGB->a

RGB->b

To convert from Lab to CMY, 3 tables calibrated to the physical characteristics of the ink/printer are required:

Lab->C

Lab->M

Lab->Y

The 8-bit input color components are treated as fixed-point numbers (3:5) in order to index into the conversion tables. The 3 bits of integer give the index, and the 5 bits of fraction are used for interpolation. Since 3 bits gives 8 values, 3 dimensions gives 512 entries (8 x 8 x 8). The size of each entry is 1 byte, requiring 512 bytes per table.

The Convert Color Space process can therefore be implemented as shown in Fig. 95 and the following lookup table is used:

Lookup	Size	Details
LU_1	8 x 8 x 8 entries 512 entries 8 bits per entry	Convert[X, Y, Z] Table indexed by the 3 highest bits of X, Y, and Z. 8 entries returned from Tri-linear index address unit Resultant 8 bits treated as fixed point 8:0 Transfer time is 8 entries at 1 byte per entry

Tri-linear interpolation returns interpolation between 8 values. Each 8 bit value takes 1 cycle to be returned

from the lookup, for a total of 8 cycles. The tri-linear interpolation also takes 8 cycles when 2 Multiply ALUs are used per cycle. General tri-linear interpolation information is given in the ALU section of this document. The 512 bytes for the lookup table fits in 16 cache lines.

The time taken to convert a single color component of image is therefore 0.105s (1500 * 1000 * 7 cycles * 10ns per cycle). To convert 3 components takes 0.415s. Fortunately, the color space conversion for printout takes place on the fly during printout itself, so is not a perceived delay.

If color components are converted separately, they must not overwrite their input color space components since all color components from the input color space are required for converting each component.

Since only 1 multiply unit is used to perform the interpolation, it is alternatively possible to do the entire Lab->CMY conversion as a single pass. This would require 3 Vertical-Strip Read Iterators, 3 Vertical-Strip Write Iterators, and access to 3 conversion tables simultaneously. In that case, it is possible to write back onto the input image and thus use no extra memory. However, access to 3 conversion tables equals 1/3 of the caching for each, that could lead to high latency for the overall process.

Affine Transform

Prior to compositing an image with a photo, it may be necessary to rotate, scale and translate it. If the image is only being translated, it can be faster to use a direct sub-pixel translation function. However, rotation, scale-up and translation can all be incorporated into a single affine transform.

A general affine transform can be included as an accelerated function. Affine transforms are limited to 2D, and if scaling down, input images should be pre-scaled via the Scale function. Having a general affine transform function allows an output image to be constructed one block at a time, and can reduce the time taken to perform a number of transformations on an image since all can be applied at the same time.

A transformation matrix needs to be supplied by the client – the matrix should be the inverse matrix of the transformation desired i.e. applying the matrix to the output pixel coordinate will give the input coordinate.

A 2D matrix is usually represented as a 3 x 3 array:

$$\begin{bmatrix} a & b & 0 \\ c & d & 0 \\ e & f & 1 \end{bmatrix}$$

Since the 3rd column is always[0, 0, 1] clients do not need to specify it. Clients instead specify a, b, c, d, e, and f.

Given a coordinate in the output image (x, y) whose top left pixel coordinate is given as (0, 0), the input coordinate is specified by: (ax + cy + e, bx + dy + f). Once the input coordinate is determined, the input image is sampled to arrive at the pixel value. Bi-linear interpolation of input image pixels is used to determine the value of the pixel at the calculated coordinate. Since affine transforms preserve parallel lines, images are processed in output vertical strips of 32 pixels wide for best average input image cache coherence.

Three Multiply ALUs are required to perform the bi-linear interpolation in 2 cycles. Multiply ALUs 1 and 2 do linear interpolation in X for lines Y and Y+1 respectively, and Multiply ALU 3 does linear interpolation in Y between the values output by Multiply ALUs 1 and 2.

As we move to the right across an output line in X, 2 Adder ALUs calculate the actual input image

coordinates by adding 'a' to the current X value, and 'b' to the current Y value respectively. When we advance to the next line (either the next line in a vertical strip after processing a maximum of 32 pixels, or to the first line in a new vertical strip) we update X and Y to pre-calculated start coordinate values constants for the given block

The process for calculating an input coordinate is given in Fig. 96 where the following constants are set by software:

Calculate Pixel

Once we have the input image coordinates, the input image must be sampled. A lookup table is used to return the values at the specified coordinates in readiness for bilinear interpolation. The basic process is as indicated in Fig. 97 and the following lookup table is used:

Lookup	Size	Details
LU_1	Image width by Image height 8 bits per entry	Bilinear Image lookup [X, Y] Table indexed by the integer part of X and Y. 4 entries returned from Bilinear index address unit, 2 per cycle. Each 8 bit entry treated as fixed point 8:0 Transfer time is 2 cycles (2 16 bit entries in FIFO hold the 4 8 bit entries)

The affine transform requires all 4 Multiply Units and all 4 Adder ALUs, and *with good cache coherence* can perform an affine transform with an average of 2 cycles per output pixel. This timing assumes good cache coherence, which is true for non-skewed images. Worst case timings are severely skewed images, which meaningful Vark scripts are unlikely to contain.

The time taken to transform a 128 x 128 image is therefore 0.00033 seconds (32,768 cycles). If this is a clip image with 4 channels (including a channel), the total time taken is 0.00131 seconds (131,072 cycles).

A Vertical-Strip Write Iterator is required to output the pixels. No Read Iterator is required. However, since the affine transform accelerator is bound by time taken to access input image pixels, as many cache lines as possible should be allocated to the read of pixels from the input image. At least 32 should be available, and preferably 64 or more.

Scaling

Scaling is essentially a re-sampling of an image. Scale up of an image can be performed using the Affine Transform function. Generalized scaling of an image, including scale down, is performed by the hardware accelerated Scale function. Scaling is performed independently in X and Y, so different scale factors can be used in each dimension.

The generalized scale unit must match the Affine Transform scale function in terms of registration. The generalized scaling process is as illustrated in Fig. 98. The scale in X is accomplished by Fant's re-sampling algorithm as illustrated in Fig. 99.

Where the following constants are set by software:

Constant	Value
K_1	Number of input pixels that contribute to an output pixel in X
K_2	$1/K_1$

The following registers are used to hold temporary variables:

Variable	Value
$Latch_1$	Amount of input pixel remaining unused (starts at 1 and decrements)
$Latch_2$	Amount of input pixels remaining to contribute to current output pixel (starts at K_1 and decrements)
$Latch_3$	Next pixel (in X)
$Latch_4$	Current pixel
$Latch_5$	Accumulator for output pixel (unscaled)
$Latch_6$	Pixel Scaled in X (output)

The Scale in Y process is illustrated in Fig. 100 and is also accomplished by a slightly altered version of Fant's re-sampling algorithm to account for processing in order of X pixels.

Where the following constants are set by software:

Constant	Value
K_1	Number of input pixels that contribute to an output pixel in Y
K_2	$1/K_1$

The following registers are used to hold temporary variables:

Variable	Value
$Latch_1$	Amount of input pixel remaining unused (starts at 1 and decrements)
$Latch_2$	Amount of input pixels remaining to contribute to current output pixel (starts at K_1 and decrements)
$Latch_3$	Next pixel (in Y)
$Latch_4$	Current pixel
$Latch_5$	Pixel Scaled in Y (output)

The following DRAM FIFOs are used:

Lookup	Size	Details
$FIFO_1$	$ImageWidth_{OUT}$ entries 8 bits per entry	1 row of image pixels already scaled in X 1 cycle transfer time
$FIFO_2$	$ImageWidth_{OUT}$ entries 16 bits per entry	1 row of image pixels already scaled in X 2 cycles transfer time (1 byte per cycle)

Tessellate Image

Tessellation of an image is a form of tiling. It involves copying a specially designed "tile" multiple times horizontally and vertically into a second (usually larger) image space. When tessellated, the small tile forms a seamless picture. One example of this is a small tile of a section of a brick wall. It is designed so that when tessellated, it forms a full brick wall. Note that there is no scaling or sub-pixel translation involved in tessellation.

The most cache-coherent way to perform tessellation is to output the image sequentially line by line, and to repeat the same line of the input image for the duration of the line. When we finish the line, the input image must also advance to the next line (and repeat it multiple times across the output line).

An overview of the tessellation function is illustrated 390 in Fig. 101. The Sequential Read Iterator 392 is set up to continuously read a single line of the input tile (StartLine would be 0 and EndLine would be 1). Each input pixel is written to all 3 of the Write Iterators 393-395. A counter 397 in an Adder ALU counts down the number of pixels in an output line, terminating the sequence at the end of the line.

At the end of processing a line, a small software routine updates the Sequential Read Iterator's StartLine and EndLine registers before restarting the microcode and the Sequential Read Iterator (which clears the FIFO and repeats line 2 of the tile). The Write Iterators 393-395 are not updated, and simply keep on writing out to their respective parts of the output image. The net effect is that the tile has one line repeated across an output line, and then the tile is repeated vertically too.

This process does not fully use the memory bandwidth since we get good cache coherence in the input image, but it does allow the tessellation to function with tiles of any size. The process uses 1 Adder ALU. If the 3 Write Iterators 393-395 each write to 1/3 of the image (breaking the image on tile sized boundaries), then the entire tessellation process takes place at an average speed of 1/3 cycle per output image pixel. For an image of 1500 x 1000, this equates to .005 seconds (5,000,000ns).

Sub-pixel Translator

Before compositing an image with a background, it may be necessary to translate it by a sub-pixel amount in both X and Y. Sub-pixel transforms can increase an image's size by 1 pixel in each dimension. The value of the region outside the image can be client determined, such as a constant value (e.g. black), or edge pixel replication. Typically it will be better to use black.

The sub-pixel translation process is as illustrated in Fig. 102. Sub-pixel translation in a given dimension is defined by:

$$Pixel_{out} = Pixel_{in} * (1\text{-}Translation) + Pixel_{in-1} * Translation$$

It can also be represented as a form of interpolation:

$$Pixel_{out} = Pixel_{in-1} + (Pixel_{in} - Pixel_{in-1}) * Translation$$

Implementation of a single (on average) cycle interpolation engine using a single Multiply ALU and a single Adder ALU in conjunction is straightforward. Sub-pixel translation in both X & Y requires 2 interpolation engines.

In order to sub-pixel translate in Y, 2 Sequential Read Iterators 400, 401 are required (one is reading a line ahead of the other from the same image), and a single Sequential Write Iterator 403 is required.

The first interpolation engine (interpolation in Y) accepts pairs of data from 2 streams, and linearly interpolates between them. The second interpolation engine (interpolation in X) accepts its data as a single 1 dimensional stream and linearly interpolates between values. Both engines interpolate in 1 cycle on average.

Each interpolation engine 405, 406 is capable of performing the sub-pixel translation in 1 cycle per output pixel on average. The overall time is therefore 1 cycle per output pixel, with requirements of 2 Multiply ALUs and 2 Adder ALUs.

The time taken to output 32 pixels from the sub-pixel translate function is on average 320ns (32 cycles). This is enough time for 4 full cache-line accesses to DRAM, so the use of 3 Sequential Iterators is well within timing limits.

The total time taken to sub-pixel translate an image is therefore 1 cycle per pixel of the output image. A typical image to be sub-pixel translated is a tile of size 128 * 128. The output image size is 129 * 129. The process takes 129 * 129 * 10ns = 166,410ns.

The Image Tiler function also makes use of the sub-pixel translation algorithm, but does not require the writing out of the sub-pixel-translated data, but rather processes it further.

Image Tiler

The high level algorithm for tiling an image is carried out in software. Once the placement of the tile has been determined, the appropriate colored tile must be composited. The actual compositing of each tile onto an image is carried out in hardware via the microcoded ALUs. Compositing a tile involves both a texture application and a color application to a background image. In some cases it is desirable to compare the *actual* amount of texture added to the background in relation to the *intended* amount of texture, and use this to scale the color being applied. In these cases the texture must be applied first.

Since color application functionality and texture application functionality are somewhat independent, they are separated into sub-functions.

The number of cycles per 4-channel tile composite for the different texture styles and coloring styles is summarised in the following table:

	Constant color	**Pixel color**
Replace texture	4	4.75
25% background + tile texture	4	4.75
Average height algorithm	5	5.75
Average height algorithm with feedback	5.75	6.5

Tile Coloring and Compositing

A tile is set to have either a constant color (for the whole tile), or takes each pixel value from an input image.

Both of these cases may also have feedback from a texturing stage to scale the opacity (similar to thinning paint).

The steps for the 4 cases can be summarised as:

- Sub-pixel translate the tile's opacity values,
- Optionally scale the tile's opacity (if feedback from texture application is enabled).
- Determine the color of the pixel (constant or from an image map).
- Composite the pixel onto the background image.

Each of the 4 cases is treated separately, in order to minimize the time taken to perform the function. The summary of time per color compositing style for a single color channel is described in the following table:

Tiling color style	**No feedback from texture (cycles per pixel)**	**Feedback from texture (cycles per pixel)**
Tile has constant color per pixel	1	2
Tile has per pixel color from input image	1.25	2

Constant color

In this case, the tile has a constant color, determined by software. While the ACP 31 is placing down one tile, the software can be determining the placement and coloring of the next tile.

The color of the tile can be determined by bi-linear interpolation into a scaled version of the image being tiled. The scaled version of the image can be created and stored in place of the image pyramid, and needs only to be performed once per entire tile operation. If the tile size is 128 x 128, then the image can be scaled down by 128:1 in each dimension.

Without feedback

When there is no feedback from the texturing of a tile, the tile is simply placed at the specified coordinates. The tile color is used for each pixel's color, and the opacity for the composite comes from the tile's sub-pixel translated opacity channel. In this case color channels and the texture channel can be processed completely independently between tiling passes.

The overview of the process is illustrated in Fig. 103. Sub-pixel translation 410 of a tile can be accomplished using 2 Multiply ALUs and 2 Adder ALUs in an average time of 1 cycle per output pixel. The output from the sub-pixel translation is the mask to be used in compositing 411 the constant tile color 412 with the background image from background sequential Read Iterator.

Compositing can be performed using 1 Multiply ALU and 1 Adder ALU in an average time of 1 cycle per composite. Requirements are therefore 3 Multiply ALUs and 3 Adder ALUs. 4 Sequential Iterators 413-416 are required, taking 320ns to read or write their contents. With an average number of cycles of 1 per pixel to sub-pixel translate and composite, there is sufficient time to read and write the buffers.

With feedback

When there is feedback from the texturing of a tile, the tile is placed at the specified coordinates. The tile color is used for each pixel's color, and the opacity for the composite comes from the tile's sub-pixel translated opacity

channel scaled by the feedback parameter. Thus the texture values must be calculated before the color value is applied.

The overview of the process is illustrated in Fig. 97. Sub-pixel translation of a tile can be accomplished using 2 Multiply ALUs and 2 Adder ALUs in an average time of 1 cycle per output pixel. The output from the sub-pixel translation is the mask to be scaled according to the feedback read from the Feedback Sequential Read Iterator 420. The feedback is passed it to a Scaler (1 Multiply ALU) 421.

Compositing 422 can be performed using 1 Multiply ALU and 1 Adder ALU in an average time of 1 cycle per composite. Requirements are therefore 4 Multiply ALUs and all 4 Adder ALUs. Although the entire process can be accomplished in 1 cycle on average, the bottleneck is the memory access, since 5 Sequential Iterators are required. With sufficient buffering, the average time is 1.25 cycles per pixel.

Color from Input Image

One way of coloring pixels in a tile is to take the color from pixels in an input image. Again, there are two possibilities for compositing: with and without feedback from the texturing.

Without feedback

In this case, the tile color simply comes from the relative pixel in the input image. The opacity for compositing comes from the tile's opacity channel sub-pixel shifted.

The overview of the process is illustrated in Fig. 105. Sub-pixel translation 425 of a tile can be accomplished using 2 Multiply ALUs and 2 Adder ALUs in an average time of 1 cycle per output pixel. The output from the sub-pixel translation is the mask to be used in compositing 426 the tile's pixel color (read from the input image 428) with the background image 429.

Compositing 426 can be performed using 1 Multiply ALU and 1 Adder ALU in an average time of 1 cycle per composite. Requirements are therefore 3 Multiply ALUs and 3 Adder ALUs. Although the entire process can be accomplished in 1 cycle on average, the bottleneck is the memory access, since 5 Sequential Iterators are required. With sufficient buffering, the average time is 1.25 cycles per pixel.

With feedback

In this case, the tile color still comes from the relative pixel in the input image, but the opacity for compositing is affected by the relative amount of texture height actually applied during the texturing pass. This process is as illustrated in Fig. 106.

Sub-pixel translation 431 of a tile can be accomplished using 2 Multiply ALUs and 2 Adder ALUs in an average time of 1 cycle per output pixel. The output from the sub-pixel translation is the mask to be scaled 431 according to the feedback read from the Feedback Sequential Read Iterator 432. The feedback is passed to a Scaler (1 Multiply ALU) 431.

Compositing 434 can be performed using 1 Multiply ALU and 1 Adder ALU in an average time of 1 cycle per composite.

Requirements are therefore all 4 Multiply ALUs and 3 Adder ALUs. Although the entire process can be accomplished in 1 cycle on average, the bottleneck is the memory access, since 6 Sequential Iterators are required. With sufficient buffering, the average time is 1.5 cycles per pixel.

Tile Texturing

Each tile has a surface texture defined by its texture channel. The texture must be sub-pixel translated and then applied to the output image. There are 3 styles of texture compositing:

Replace texture

25% background + tile's texture

Average height algorithm

In addition, the Average height algorithm can save feedback parameters for color compositing.

The time taken per texture compositing style is summarised in the following table:

Tiling color style	Cycles per pixel (no feedback from texture)	Cycles per pixel (feedback from texture)
Replace texture	1	-
25% background + tile texture value	1	-
Average height algorithm	2	2

Replace texture

In this instance, the texture from the tile replaces the texture channel of the image, as illustrated in Fig. 107. Sub-pixel translation 436 of a tile's texture can be accomplished using 2 Multiply ALUs and 2 Adder ALUs in an average time of 1 cycle per output pixel. The output from this sub-pixel translation is fed directly to the Sequential Write Iterator 437.

The time taken for replace texture compositing is 1 cycle per pixel. There is no feedback, since 100% of the texture value is always applied to the background. There is therefore no requirement for processing the channels in any particular order.

25% Background + Tile's Texture

In this instance, the texture from the tile is added to 25% of the existing texture value. The new value must be greater than or equal to the original value. In addition, the new texture value must be clipped at 255 since the texture channel is only 8 bits. The process utilised is illustrated in Fig. 108.

Sub-pixel translation 440 of a tile's texture can be accomplished using 2 Multiply ALUs and 2 Adder ALUs in an average time of 1 cycle per output pixel. The output from this sub-pixel translation 440 is fed to an adder 441 where it is added to ¼ 442 of the background texture value. Min and Max functions 444 are provided by the 2 adders not used for sub-pixel translation and the output written to a Sequential Write Iterator 445.

The time taken for this style of texture compositing is 1 cycle per pixel. There is no feedback, since 100% of the texture value is considered to have been applied to the background (even if clipping at 255 occurred). There is therefore no requirement for processing the channels in any particular order.

Average height algorithm

In this texture application algorithm, the average height under the tile is computed, and each pixel's height is compared to the average height. If the pixel's height is less than the average, the stroke height is added to the background height. If the pixel's height is greater than or equal to the average, then the stroke height is added to the average height. Thus background peaks thin the stroke. The height is constrained to increase by a minimum amount to prevent the background from thinning the stroke application to 0 (the minimum amount can be 0 however). The height

is also clipped at 255 due to the 8-bit resolution of the texture channel.

There can be feedback of the difference in texture applied versus the expected amount applied. The feedback amount can be used as a scale factor in the application of the tile's color.

In both cases, the average texture is provided by software, calculated by performing a bi-level interpolation on a scaled version of the texture map. Software determines the next tile's average texture height while the current tile is being applied. Software must also provide the minimum thickness for addition, which is typically constant for the entire tiling process.

Without feedback

With no feedback, the texture is simply applied to the background texture, as shown in Fig. 109.

4 Sequential Iterators are required, which means that if the process can be pipelined for 1 cycle, the memory is fast enough to keep up.

Sub-pixel translation 450 of a tile's texture can be accomplished using 2 Multiply ALUs and 2 Adder ALUs in an average time of 1 cycle per output pixel. Each Min & Max function 451,452 requires a separate Adder ALU in order to complete the entire operation in 1 cycle. Since 2 are already used by the sub-pixel translation of the texture, there are not enough remaining for a 1 cycle average time.

The average time for processing 1 pixel's texture is therefore 2 cycles. Note that there is no feedback, and hence the color channel order of compositing is irrelevant.

With feedback

This is conceptually the same as the case without feedback, except that in addition to the standard processing of the texture application algorithm, it is necessary to also record the proportion of the texture actually applied. The proportion can be used as a scale factor for subsequent compositing of the tile's color onto the background image. A flow diagram is illustrated in Fig. 110 and the following lookup table is used:

Lookup	Size	Details
LU_1	256 entries 16 bits per entry	1/N Table indexed by N (range 0-255) Resultant 16 bits treated as fixed point 0:16

Each of the 256 entries in the software provided 1/N table 460 is 16 bits, thus requiring 16 cache lines to hold continuously.

Sub-pixel translation 461 of a tile's texture can be accomplished using 2 Multiply ALUs and 2 Adder ALUs in an average time of 1 cycle per output pixel. Each Min 462 & Max 463 function requires a separate Adder ALU in order to complete the entire operation in 1 cycle. Since 2 are already used by the sub-pixel translation of the texture, there are not enough remaining for a 1 cycle average time.

The average time for processing 1 pixel's texture is therefore 2 cycles. Sufficient space must be allocated for the feedback data area (a tile sized image channel). The texture must be applied before the tile's color is applied, since the feedback is used in scaling the tile's opacity.

CCD Image Interpolator

Images obtained from the CCD via the ISI 83 (Fig. 3) are 750 x 500 pixels. When the image is captured via the ISI, the orientation of the camera is used to rotate the pixels by 0, 90, 180, or 270 degrees so that the top of the

image corresponds to 'up'. Since every pixel only has an R, G, or B color component (rather than all 3), the fact that these have been rotated must be taken into account when interpreting the pixel values. Depending on the orientation of the camera, each 2x2 pixel block has one of the configurations illustrated in Fig. 111:

Several processes need to be performed on the CCD captured image in order to transform it into a useful form for processing:

- Up-interpolation of low-sample rate color components in CCD image (interpreting correct orientation of pixels)

Color conversion from RGB to the internal color space

- Scaling of the internal space image from 750 x 500 to 1500 x 1000.
- Writing out the image in a planar format

The entire channel of an image is required to be available at the same time in order to allow warping. In a low memory model (8MB), there is only enough space to hold a single channel at full resolution as a temporary object. Thus the color conversion is to a single color channel. The limiting factor on the process is the color conversion, as it involves tri-linear interpolation from RGB to the internal color space, a process that takes 0.026ns per channel (750 x 500 x 7 cycles per pixel x 10ns per cycle = 26.250,000ns).

It is important to perform the color conversion *before* scaling of the internal color space image as this reduces the number of pixels scaled (and hence the overall process time) by a factor of 4.

The requirements for all of the transformations may not fit in the ALU scheme. The transformations are therefore broken into two phases:

Phase 1: Up-interpolation of low-sample rate color components in CCD image (interpreting correct orientation of pixels)

Color conversion from RGB to the internal color space

Writing out the image in a planar format

Phase 2: Scaling of the internal space image from 750 x 500 to 1500 x 1000

Separating out the scale function implies that the small color converted image must be in memory at the same time as the large one. The output from Phase 1 (0.5 MB) can be safely written to the memory area usually kept for the image pyramid (1 MB). The output from Phase 2 can be the general expanded CCD image. Separation of the scaling also allows the scaling to be accomplished by the Affine Transform, and also allows for a different CCD resolution that may not be a simple 1:2 expansion.

Phase 1: Up-interpolation of low-sample rate color components.

Each of the 3 color components (R, G, and B) needs to be up interpolated in order for color conversion to take place for a given pixel. We have 7 cycles to perform the interpolation per pixel since the color conversion takes 7 cycles.

Interpolation of G is straightforward and is illustrated in Fig. 112. Depending on orientation, the actual pixel value G alternates between odd pixels on odd lines & even pixels on even lines, and odd pixels on even lines & even pixels on odd lines. In both cases, linear interpolation is all that is required. Interpolation of R and B components as illustrated in Fig. 113 and Fig. 113, is more complicated, since in the horizontal and vertical directions, as can be seen from the diagrams, access to 3 rows of pixels simultaneously is required, so 3 Sequential Read Iterators are required, each one offset by a single row. In addition, we have access to the previous pixel on the same row via a latch for each

row.

Each pixel therefore contains one component from the CCD, and the other 2 up-interpolated. When one component is being bi-linearly interpolated, the other is being linearly interpolated. Since the interpolation factor is a constant 0.5, interpolation can be calculated by an add and a shift 1 bit right (in 1 cycle), and bi-linear interpolation of factor 0.5 can be calculated by 3 adds and a shift 2 bits right (3 cycles). The total number of cycles required is therefore 4, using a single multiply ALU.

Fig. 115 illustrates the case for rotation 0 even line even pixel (EL, EP), and odd line odd pixel (OL, OP) and Fig. 116 illustrates the case for rotation 0 even line odd pixel (EL, OP), and odd line even pixel (OL, EP). The other rotations are simply different forms of these two expressions.

Color conversion

Color space conversion from RGB to Lab is achieved using the same method as that described in the general Color Space Convert function, a process that takes 8 cycles per pixel. Phase 1 processing can be described with reference to Fig. 117.

The up-interpolate of the RGB takes 4 cycles (1 Multiply ALU), but the conversion of the color space takes 8 cycles per pixel (2 Multiply ALUs) due to the lookup transfer time.

Phase 2

Scaling the image

This phase is concerned with up-interpolating the image from the CCD resolution (750 x 500) to the working photo resolution (1500 x 1000). Scaling is accomplished by running the Affine transform with a scale of 1:2. The timing of a general affine transform is 2 cycles per output pixel, which in this case means an elapsed scaling time of 0.03 seconds.

Illuminate Image

Once an image has been processed, it can be illuminated by one or more light sources. Light sources can be:

1. Directional – is infinitely distant so it casts parallel light in a single direction
2. Omni – casts unfocused lights in all directions.
3. Spot – casts a focused beam of light at a specific target point. There is a cone and penumbra associated with a spotlight.

The scene may also have an associated bump-map to cause reflection angles to vary. Ambient light is also optionally present in an illuminated scene.

In the process of accelerated illumination, we are concerned with illuminating one image channel by a single light source. Multiple light sources can be applied to a single image channel as multiple passes one pass per light source. Multiple channels can be processed one at a time with or without a bump-map.

The normal surface vector (N) at a pixel is computed from the bump-map if present. The default normal vector, in the absence of a bump-map, is perpendicular to the image plane i.e. N = [0, 0, 1].

The viewing vector V is always perpendicular to the image plane i.e. V = [0, 0, 1].

For a directional light source, the light source vector (L) from a pixel to the light source is constant across the entire image, so is computed once for the entire image. For an omni light source (at a finite distance), the light source vector is computed independently for each pixel.

A pixel's reflection of ambient light is computed according to: $I_a k_a O_d$

A pixel's diffuse and specular reflection of a light source is computed according to the Phong model:

$f_{att}I_p[k_dO_d(N\bullet L) + k_sO_s(R\bullet V)^n]$

When the light source is at infinity, the light source intensity is constant across the image.

Each light source has three contributions per pixel

Ambient Contribution

Diffuse contribution

Specular contribution

The light source can be defined using the following variables:

d_L	Distance from light source
f_{att}	Attenuation with distance [$f_{att} = 1 / d_L^2$]
R	Normalised reflection vector [R = 2N(N.L) – L]
I_a	Ambient light intensity
I_p	Diffuse light coefficient
k_a	Ambient reflection coefficient
k_d	Diffuse reflection coefficient
k_s	Specular reflection coefficient
k_{sc}	Specular color coefficient
L	Normalised light source vector
N	Normalised surface normal vector
n	Specular exponent
O_d	Object's diffuse color (i.e. image pixel color)
O_s	Object's specular color ($k_{sc}O_d + (1 - k_{sc})I_p$)
V	Normalised viewing vector [V = [0, 0, 1]]

The same reflection coefficients (k_a, k_s, k_d) are used for each color component.

A given pixel's value will be equal to the ambient contribution plus the sum of each light's diffuse and specular contribution.

<u>Sub-Processes of Illumination Calculation</u>

In order to calculate diffuse and specular contributions, a variety of other calculations are required. These are calculations of:

$1/\sqrt{X}$

N

L

N•L

R•V

f_{att}

f_{cp}

Sub-processes are also defined for calculating the contributions of:

ambient

diffuse

specular

The sub-processes can then be used to calculate the overall illumination of a light source. Since there are only 4 multiply ALUs, the microcode for a particular type of light source can have sub-processes intermingled appropriately for performance.

Calculation of $1/\sqrt{X}$

The Vark lighting model uses vectors. In many cases it is important to calculate the inverse of the length of the vector for normalization purposes. Calculating the inverse of the length requires the calculation of 1/SquareRoot[X].

Logically, the process can be represented as a process with inputs and outputs as shown in Fig. 118. Referring to Fig. 119, the calculation can be made via a lookup of the estimation, followed by a single iteration of the following function:

$V_{n+1} = \frac{1}{2} V_n(3 - XV_n^2)$

The number of iterations depends on the accuracy required. In this case only 16 bits of precision are required. The table can therefore have 8 bits of precision, and only a single iteration is necessary. The following constant is set by software:

Constant	Value
K_1	3

The following lookup table is used:

Lookup	Size	Details
LU_1	256 entries 8 bits per entry	1/SquareRoot[X] Table indexed by the 8 highest significant bits of X. Resultant 8 bits treated as fixed point 0:8

Calculation of N

N is the surface normal vector. When there is no bump-map, N is constant. When a bump-map is present, N must be calculated for each pixel.

No bump-map

When there is no bump-map, there is a fixed normal N that has the following properties:

$N = [X_N, Y_N, Z_N] = [0, 0, 1]$

$\|N\| = 1$

$1/\|N\| = 1$

normalized N = N

These properties can be used instead of specifically calculating the normal vector and 1/||N|| and thus optimize other calculations.

With bump-map

As illustrated in Fig. 120, when a bump-map is present, N is calculated by comparing bump-map values in X and Y dimensions. Fig. 120 shows the calculation of N for pixel P1 in terms of the pixels in the same row and column, but not including the value at P1 itself. The calculation of N is made resolution independent by multiplying by a scale factor (same scale factor in X & Y). This process can be represented as a process having inputs and outputs (Z_N is always 1) as illustrated in Fig. 121.

As Z_N is always 1. Consequently X_N and Y_N *are not normalized yet* (since $Z_N = 1$). Normalization of N is delayed until after calculation of N.L so that there is only 1 multiply by 1/||N|| instead of 3.

An actual process for calculating N is illustrated in Fig. 122.

The following constant is set by software:

Constant	Value
K_1	ScaleFactor (to make N resolution independent)

Calculation of L

Directional lights

When a light source is infinitely distant, it has an effective constant light vector L. L is normalized and calculated by software such that:

$L = [X_L, Y_L, Z_L]$

$||L|| = 1$

$1/||L|| = 1$

These properties can be used instead of specifically calculating the L and 1/||L|| and thus optimize other calculations. This process is as illustrated in Fig. 123.

Omni lights and Spotlights

When the light source is not infinitely distant, L is the vector from the current point P to the light source PL. Since $P = [X_P, Y_P, 0]$, L is given by:

$$L = [X_L, Y_L, Z_L]$$

$$X_L = X_P - X_{PL}$$

$$Y_L = Y_P - Y_{PL}$$

$$Z_L = -Z_{PL}$$

We normalize X_L, Y_L and Z_L by multiplying each by 1/||L||. The calculation of 1/||L|| (for later use in normalizing) is accomplished by calculating

$V = X_L^2 + Y_L^2 + Z_L^2$

and then calculating $V^{-1/2}$

In this case, the calculation of L can be represented as a process with the inputs and outputs as indicated in Fig. 124.

X_P and Y_P are the coordinates of the pixel whose illumination is being calculated. Z_P is always 0.

The actual process for calculating L can be as set out in Fig. 125.

Where the following constants are set by software:

Constant	Value
K_1	X_{PL}
K_2	Y_{PL}
K_3	Z_{PL}^2 (as Z_P is 0)
K_4	$-Z_{PL}$

Calculation of N.L

Calculating the dot product of vectors N and L is defined as:

$X_N X_L + Y_N Y_L + Z_N Z_L$

No bump-map

When there is no bump-map N is a constant [0, 0, 1]. N.L therefore reduces to Z_L.

With bump-map

When there is a bump-map, we must calculate the dot product directly. Rather than take in normalized N components, we normalize after taking the dot product of a non-normalized N to a normalized L. L is either normalized by software (if it is constant), or by the Calculate L process. This process is as illustrated in Fig. 126.

Note that Z_N is not required as input since it is defined to be 1. However $1/\|N\|$ is required instead, in order to normalize the result. One actual process for calculating N.L is as illustrated in Fig. 127.

Calculation of R•V

R•V is required as input to specular contribution calculations. Since V = [0, 0, 1], only the Z components are required. R•V therefore reduces to:

$R \bullet V = 2Z_N(N.L) - Z_L$

In addition, since the un-normalized $Z_N = 1$, normalized $Z_N = 1/\|N\|$

No bump-map

The simplest implementation is when N is constant (i.e. no bump-map). Since N and V are constant, N.L and R•V can be simplified:

$V = [0, 0, 1]$

$N = [0, 0, 1]$

$L = [X_L, Y_L, Z_L]$

$N.L = Z_L$

$R \bullet V = 2Z_N(N.L) - Z_L$

$= 2Z_L - Z_L$

$= Z_L$

When L is constant (Directional light source), a normalized Z_L can be supplied by software in the form of a constant whenever R•V is required. When L varies (Omni lights and Spotlights), normalized Z_L must be calculated on

the fly. It is obtained as output from the Calculate L process.

With bump-map

When N is not constant, the process of calculating R•V is simply an implementation of the generalized formula:

$R \bullet V = 2Z_N(N.L) - Z_L$

The inputs and outputs are as shown in Fig. 128 with the an actual implementation as shown in Fig. 129.

Calculation of Attenuation Factor

Directional lights

When a light source is infinitely distant, the intensity of the light does not vary across the image. The attenuation factor f_{att} is therefore 1. This constant can be used to optimize illumination calculations for infinitely distant light sources.

Omni lights and Spotlights

When a light source is not infinitely distant, the intensity of the light can vary according to the following formula:

$f_{att} = f_0 + f_1/d + f_2/d^2$

Appropriate settings of coefficients f_0, f_1, and f_2 allow light intensity to be attenuated by a constant, linearly with distance, or by the square of the distance.

Since $d = ||L||$, the calculation of f_{att} can be represented as a process with the following inputs and outputs as illustrated in Fig. 130.

The actual process for calculating f_{att} can be defined in Fig. 131.

Where the following constants are set by software:

Constant	Value
K_1	F_2
K_2	f_1
K_3	F_0

Calculation of Cone and Penumbra Factor

Directional lights and Omni lights

These two light sources are not focused, and therefore have no cone or penumbra. The cone-penumbra scaling factor f_{cp} is therefore 1. This constant can be used to optimize illumination calculations for Directional and Omni light sources.

Spotlights

A spotlight focuses on a particular target point (PT). The intensity of the Spotlight varies according to whether the particular point of the image is in the cone, in the penumbra, or outside the cone/penumbra region.

Turning now to Fig. 132, there is illustrated a graph of f_{cp} with respect to the penumbra position. Inside the cone 470, f_{cp} is 1, outside 471 the penumbra f_{cp} is 0. From the edge of the cone through to the end of the penumbra, the light intensity varies according to a cubic function 472.

The various vectors for penumbra 475 and cone 476 calculation are as illustrated in Fig. 133 and Fig. 134.

Looking at the surface of the image in 1 dimension as shown in Fig. 134, 3 angles A, B, and C are defined. A is the angle between the target point 479, the light source 478, and the end of the cone 480. C is the angle between the target point 479, light source 478, and the end of the penumbra 481. Both are fixed for a given light source. B is the angle between the target point 479, the light source 478, and the position being calculated 482, and therefore changes with every point being calculated on the image.

We normalize the range A to C to be 0 to 1, and find the distance that B is along that angle range by the formula:

(B-A) / (C-A)

The range is forced to be in the range 0 to 1 by truncation, and this value used as a lookup for the cubic approximation of f_{cp}.

The calculation of f_{att} can therefore be represented as a process with the inputs and outputs as illustrated in Fig. 135 with an actual process for calculating f_{cp} is as shown in Fig. 136 where the following constants are set by software:

Constant	Value
K_1	X_{LT}
K_2	Y_{LT}
K_3	Z_{LT}
K_4	A
K_5	1/(C-A). [MAXNUM if no penumbra]

The following lookup tables are used:

Lookup	Size	Details
LU_1	64 entries 16 bits per entry	Arcos(X) Units are same as for constants K_5 and K_6 Table indexed by highest 6 bits Result by linear interpolation of 2 entries Timing is 2 * 8 bits * 2 entries = 4 cycles
LU_2	64 entries 16 bits per entry	Light Response function f_{cp} F(1) = 0, F(0) = 1, others are according to cubic Table indexed by 6 bits (1:5) Result by linear interpolation of 2 entries Timing is 2 * 8 bits = 4 cycles

Calculation of Ambient Contribution

Regardless of the number of lights being applied to an image, the ambient light contribution is performed once for each pixel, and does not depend on the bump-map.

The ambient calculation process can be represented as a process with the inputs and outputs as illustrated in Fig. 131. The implementation of the process requires multiplying each pixel from the input image (O_d) by a constant value ($I_a k_a$), as shown in Fig. 138 where the following constant is set by software:

Constant	Value
K_1	$I_a k_a$

Calculation of Diffuse Contribution

Each light that is applied to a surface produces a diffuse illumination. The diffuse illumination is given by the formula:

$\text{diffuse} = k_d O_d (N.L)$

There are 2 different implementations to consider:

Implementation 1 - constant N and L

When N and L are both constant (Directional light and no bump-map):

$N.L = Z_L$

Therefore:

$\text{diffuse} = k_d O_d Z_L$

Since O_d is the only variable, the actual process for calculating the diffuse contribution is as illustrated in Fig. 139 where the following constant is set by software:

Constant	Value
K_1	$k_d(N.L) = k_d Z_L$

Implementation 2 – non-constant N & L

When either N or L are non-constant (either a bump-map or illumination from an Omni light or a Spotlight), the diffuse calculation is performed directly according to the formula:

$\text{diffuse} = k_d O_d (N.L)$

The diffuse calculation process can be represented as a process with the inputs as illustrated in Fig. 140. N.L can either be calculated using the Calculate N.L Process, or is provided as a constant. An actual process for calculating the diffuse contribution is as shown in Fig. 141 where the following constants are set by software:

Constant	Value
K_1	k_d

Calculation of Specular Contribution

Each light that is applied to a surface produces a specular illumination. The specular illumination is given by the formula:

$\text{specular} = k_s O_s (R \bullet V)^n$

where $O_s = k_{sc}O_d + (1-k_{sc})I_p$

There are two implementations of the Calculate Specular process.

Implementation 1 – constant N and L

The first implementation is when both N and L are constant (Directional light and no bump-map). Since N, L and V are constant, N.L and R•V are also constant:

$V = [0, 0, 1]$

$N = [0, 0, 1]$

$L = [X_L, Y_L, Z_L]$

$N.L = Z_L$

$R \bullet V = 2Z_N(N.L) - Z_L$

$= 2Z_L - Z_L$

$= Z_L$

The specular calculation can thus be reduced to:

$specular = k_s O_s Z_L^n$

$= k_s Z_L^n (k_{sc}O_d + (1-k_{sc})I_p)$

$= k_s k_{sc} Z_L^n O_d + (1-k_{sc})I_p k_s Z_L^n$

Since only O_d is a variable in the specular calculation, the calculation of the specular contribution can therefore be represented as a process with the inputs and outputs as indicated in Fig. 142 and an actual process for calculating the specular contribution is illustrated in Fig. 143 where the following constants are set by software:

Constant	Value
K_1	$k_s k_{sc} Z_L^n$
K_2	$(1-k_{sc})I_p k_s Z_L^n$

Implementation 2 – non constant N and L

This implementation is when either N or L are not constant (either a bump-map or illumination from an Omni light or a Spotlight). This implies that R•V must be supplied, and hence $R \bullet V^n$ must also be calculated.

The specular calculation process can be represented as a process with the inputs and outputs as shown in Fig. 144. Fig. 145 shows an actual process for calculating the specular contribution where the following constants are set by software:

Constant	Value
K_1	k_s
K_2	k_{sc}
K_3	$(1-k_{sc})I_p$

The following lookup table is used:

Lookup	Size	Details
LU_1	32 entries 16 bits per entry	X^n Table indexed by 5 highest bits of integer R•V Result by linear interpolation of 2 entries using fraction of R•V. Interpolation by 2 Multiplies. The time taken to retrieve the data from the lookup is 2 * 8 bits * 2 entries = 4 cycles.

When ambient light is the only illumination

If the ambient contribution is the only light source, the process is very straightforward since it is not necessary to add the ambient light to anything with the overall process being as illustrated in Fig. 146. We can divide the image vertically into 2 sections, and process each half simultaneously by duplicating the ambient light logic (thus using a total of 2 Multiply ALUs and 4 Sequential Iterators). The timing is therefore ½ cycle per pixel for ambient light application.

The typical illumination case is a scene lit by one or more lights. In these cases, because ambient light calculation is so cheap, the ambient calculation is included with the processing of each light source. The first light to be processed should have the correct $I_a k_a$ setting, and subsequent lights should have an $I_a k_a$ value of 0 (to prevent multiple ambient contributions).

If the ambient light is processed as a separate pass (and not the first pass), it is necessary to add the ambient light to the current calculated value (requiring a read and write to the same address). The process overview is shown in Fig. 147.

The process uses 3 Image Iterators, 1 Multiply ALU, and takes 1 cycle per pixel on average.

Infinite Light Source

In the case of the infinite light source, we have a constant light source intensity across the image. Thus both L and f_{att} are constant.

No Bump Map

When there is no bump-map, there is a constant normal vector N [0, 0, 1]. The complexity of the illumination is greatly reduced by the constants of N, L, and f_{att}. The process of applying a single Directional light with no bump-map is as illustrated in Fig. 147 where the following constant is set by software:

Constant	Value
K_1	I_p

For a single infinite light source we want to perform the logical operations as shown in Fig. 148 where K_1 through K_4 are constants with the following values:

Constant	Value
K_1	$K_d(NsL) = K_d L_Z$
K_2	k_{sc}
K_3	$K_s(NsH)^n = K_s H_Z^2$
K_4	I_p

The process can be simplified since K_2, K_3, and K_4 are constants. Since the complexity is essentially in the calculation of the specular and diffuse contributions (using 3 of the Multiply ALUs), it is possible to safely add an ambient calculation as the 4th Multiply ALU. The first infinite light source being processed can have the true ambient light parameter $I_a k_a$ and all subsequent infinite lights can set $I_a k_a$ to be 0. The ambient light calculation becomes effectively free.

If the infinite light source is the first light being applied, there is no need to include the existing contributions made by other light sources and the situation is as illustrated in Fig. 149 where the constants have the following values:

Constant	Value
K_1	$k_d(LsN) = k_d L_Z$
K_4	I_p
K_5	$(1 - k_s(NsH)^n)I_p = (1 - k_s H_Z^n)I_p$
K_6	$k_{sc}k_s(NsH)^n I_p = k_{sc}k_s H_Z^n I_p$
K_7	$I_a k_a$

If the infinite light source is not the first light being applied, the existing contribution made by previously processed lights must be included (the same constants apply) and the situation is as illustrated in Fig. 148.

In the first case 2 Sequential Iterators 490, 491 are required, and in the second case, 3 Sequential Iterators 490, 491, 492 (the extra Iterator is required to read the previous light contributions). In both cases, the application of an infinite light source with no bump map takes 1 cycle per pixel, including optional application of the ambient light.

<u>With Bump Map</u>

When there is a bump-map, the normal vector N must be calculated per pixel and applied to the constant light source vector L. $1/\|N\|$ is also used to calculate R•V, which is required as input to the Calculate Specular 2 process. The following constants are set by software:

Constant	Value
K_1	X_L
K_2	Y_L
K_3	Z_L
K_4	I_p

Bump-map Sequential Read Iterator 490 is responsible for reading the current line of the bump-map. It

provides the input for determining the slope in X. Bump-map Sequential Read Iterators 491, 492 and are responsible for reading the line above and below the current line. They provide the input for determining the slope in Y.

Omni Lights

In the case of the Omni light source, the lighting vector L and attenuation factor f_{att} change for each pixel across an image. Therefore both L and f_{att} must be calculated for each pixel.

No Bump Map

When there is no bump-map, there is a constant normal vector N [0, 0, 1]. Although L must be calculated for each pixel, both N.L and R•V are simplified to Z_L. When there is no bump-map, the application of an Omni light can be calculated as shown in Fig. 149 where the following constants are set by software:

Constant	Value
K_1	X_P
K_2	Y_P
K_3	I_p

The algorithm optionally includes the contributions from previous light sources, and also includes an ambient light calculation. Ambient light needs only to be included once. For all other light passes, the appropriate constant in the Calculate Ambient process should be set to 0.

The algorithm as shown requires a total of 19 multiply/accumulates. The times taken for the lookups are 1 cycle during the calculation of L, and 4 cycles during the specular contribution. The processing time of 5 cycles is therefore the best that can be accomplished. The time taken is increased to 6 cycles in case it is not possible to optimally microcode the ALUs for the function. The speed for applying an Omni light onto an image with no associated bump-map is 6 cycles per pixel.

With Bump-map

When an Omni light is applied to an image with an associated a bump-map, calculation of N, L, N.L and R•V are all necessary. The process of applying an Omni light onto an image with an associated bump-map is as indicated in Fig. 150 where the following constants are set by software:

Constant	Value
K_1	X_P
K_2	Y_P
K_3	I_p

The algorithm optionally includes the contributions from previous light sources, and also includes an ambient light calculation. Ambient light needs only to be included once. For all other light passes, the appropriate constant in the Calculate Ambient process should be set to 0.

The algorithm as shown requires a total of 32 multiply/accumulates. The times taken for the lookups are 1 cycle each during the calculation of both L and N, and 4 cycles for the specular contribution. However the lookup

required for N and L are both the same (thus 2 LUs implement the 3 LUs). The processing time of 8 cycles is adequate. The time taken is extended to 9 cycles in case it is not possible to optimally microcode the ALUs for the function. The speed for applying an Omni light onto an image with an associated bump-map is 9 cycles per pixel.

Spotlights

Spotlights are similar to Omni lights except that the attenuation factor f_{att} is modified by a cone/penumbra factor f_{cp} that effectively focuses the light around a target.

No bump-map

When there is no bump-map, there is a constant normal vector N [0, 0, 1]. Although L must be calculated for each pixel, both N.L and R•V are simplified to Z_L. Fig. 151 illustrates the application of a Spotlight to an image where the following constants are set by software:

Constant	Value
K_1	X_P
K_2	Y_P
K_3	I_p

The algorithm optionally includes the contributions from previous light sources, and also includes an ambient light calculation. Ambient light needs only to be included once. For all other light passes, the appropriate constant in the Calculate Ambient process should be set to 0.

The algorithm as shown requires a total of 30 multiply/accumulates. The times taken for the lookups are 1 cycle during the calculation of L, 4 cycles for the specular contribution, and 2 sets of 4 cycle lookups in the cone/penumbra calculation.

With bump-map

When a Spotlight is applied to an image with an associated a bump-map, calculation of N, L, N.L and R•V are all necessary. The process of applying a single Spotlight onto an image with associated bump-map is illustrated in Fig. 152 where the following constants are set by software:

The algorithm optionally includes the contributions from previous light sources, and also includes an ambient light calculation. Ambient light needs only to be included once. For all other light passes, the appropriate constant in the Calculate Ambient process should be set to 0. The algorithm as shown requires a total of 41 multiply/accumulates.

Print Head 44

Fig. 153 illustrates the logical layout of a single print Head which logically consists of 8 segments, each printing bi-level cyan, magenta, and yellow onto a portion of the page.

Loading a segment for printing

Before anything can be printed, each of the 8 segments in the Print Head must be loaded with 6 rows of data corresponding to the following relative rows in the final output image:

Row 0 = Line N, Yellow, even dots 0, 2, 4, 6, 8, ...

Row 1 = Line N+8, Yellow, odd dots 1, 3, 5, 7, ...

Row 2 = Line N+10, Magenta, even dots 0, 2, 4, 6, 8, ...

Row 3 = Line N+18, Magenta, odd dots 1, 3, 5, 7, ...

Row 4 = Line N+20, Cyan, even dots 0, 2, 4, 6, 8, ...

Row 5 = Line N+28, Cyan, odd dots 1, 3, 5, 7, ...

Each of the segments prints dots over different parts of the page. Each segment prints 750 dots of one color, 375 even dots on one row, and 375 odd dots on another. The 8 segments have dots corresponding to positions:

Segment	First dot	Last dot
0	0	749
1	750	1499
2	1500	2249
3	2250	2999
4	3000	3749
5	3750	4499
6	4500	5249
7	5250	5999

Each dot is represented in the Print Head segment by a single bit. The data must be loaded 1 bit at a time by placing the data on the segment's BitValue pin, and clocked in to a shift register in the segment according to a BitClock. Since the data is loaded into a shift register, the order of loading bits must be correct. Data can be clocked in to the Print Head at a maximum rate of 10 MHz.

Once all the bits have been loaded, they must be transferred in parallel to the Print Head output buffer, ready for printing. The transfer is accomplished by a single pulse on the segment's ParallelXferClock pin.

Controlling the Print

In order to conserve power, not all the dots of the Print Head have to be printed simultaneously. A set of control lines enables the printing of specific dots. An external controller, such as the ACP, can change the number of dots printed at once, as well as the duration of the print pulse in accordance with speed and/or power requirements.

Each segment has 5 NozzleSelect lines, which are decoded to select 32 sets of nozzles per row. Since each row has 375 nozzles, each set contains 12 nozzles. There are also 2 BankEnable lines, one for each of the odd and even rows of color. Finally, each segment has 3 ColorEnable lines, one for each of C, M, and Y colors. A pulse on one of the ColorEnable lines causes the specified nozzles of the color's specified rows to be printed. A pulse is typically about 2 s in duration.

If all the segments are controlled by the same set of NozzleSelect, BankEnable and ColorEnable lines (wired externally to the print head), the following is true:

If both odd and even banks print simultaneously (both BankEnable bits are set), 24 nozzles fire simultaneously per segment, 192 nozzles in all, consuming 5.7 Watts.

If odd and even banks print independently, only 12 nozzles fire simultaneously per segment, 96 in all, consuming 2.85 Watts.

Print Head Interface 62

The Print Head Interface 62 connects the ACP to the Print Head, providing both data and appropriate signals to the external Print Head. The Print Head Interface 62 works in conjunction with both a VLIW processor 74 and a software algorithm running on the CPU in order to print a photo in approximately 2 seconds.

An overview of the inputs and outputs to the Print Head Interface is shown in Fig. 154. The Address and Data Buses are used by the CPU to address the various registers in the Print Head Interface. A single BitClock output line connects to all 8 segments on the print head. The 8 DataBits lines lead one to each segment, and are clocked in to the 8 segments on the print head simultaneously (on a BitClock pulse). For example, dot 0 is transferred to $segment_0$, dot 750 is transferred to $segment_1$, dot 1500 to $segment_2$ etc. simultaneously.

The VLIW Output FIFO contains the dithered bi-level C, M, and Y 6000 x 9000 resolution print image in the correct order for output to the 8 DataBits. The ParallelXferClock is connected to each of the 8 segments on the print head, so that on a single pulse, all segments transfer their bits at the same time. Finally, the NozzleSelect, BankEnable and ColorEnable lines are connected to each of the 8 segments, allowing the Print Head Interface to control the duration of the C, M, and Y drop pulses as well as how many drops are printed with each pulse. Registers in the Print Head Interface allow the specification of pulse durations between 0 and 6 s , with a typical duration of 2 s.

Printing an Image

There are 2 phases that must occur before an image is in the hand of the Artcam user:

1. Preparation of the image to be printed
2. Printing the prepared image

Preparation of an image only needs to be performed once. Printing the image can be performed as many times as desired.

Prepare the Image

Preparing an image for printing involves:

1. Convert the Photo Image into a Print Image
2. Rotation of the Print Image (internal color space) to align the output for the orientation of the printer
3. Up-interpolation of compressed channels (if necessary)
4. Color conversion from the internal color space to the CMY color space appropriate to the specific printer and ink

At the end of image preparation, a 4.5MB correctly oriented 1000 x 1500 CMY image is ready to be printed.

Convert Photo Image to Print Image

The conversion of a Photo Image into a Print Image requires the execution of a Vark script to perform image processing. The script is either a default image enhancement script or a Vark script taken from the currently inserted Artcard. The Vark script is executed via the CPU, accelerated by functions performed by the VLIW Vector Processor.

Rotate the Print Image

The image in memory is originally oriented to be top upwards. This allows for straightforward Vark processing. Before the image is printed, it must be aligned with the print roll's orientation. The re-alignment only needs to be done once. Subsequent Prints of a Print Image will already have been rotated appropriately.

The transformation to be applied is simply the inverse of that applied during capture from the CCD when the user pressed the "Image Capture" button on the Artcam. If the original rotation was 0, then no transformation needs to

take place. If the original rotation was +90 degrees, then the rotation before printing needs to be –90 degrees (same as 270 degrees). The method used to apply the rotation is the Vark accelerated Affine Transform function. The Affine Transform engine can be called to rotate each color channel independently. Note that the color channels cannot be rotated in place. Instead, they can make use of the space previously used for the expanded single channel (1.5MB).

Fig. 155 shows an example of rotation of a Lab image where the a and b channels are compressed 4:1. The L channel is rotated into the space no longer required (the single channel area), then the a channel can be rotated into the space left vacant by L, and finally the b channel can be rotated. The total time to rotate the 3 channels is 0.09 seconds. It is an acceptable period of time to elapse before the first print image. Subsequent prints do not incur this overhead.

Up Interpolate and color convert

The Lab image must be converted to CMY before printing. Different processing occurs depending on whether the a and b channels of the Lab image is compressed. If the Lab image is compressed, the a and b channels must be decompressed before the color conversion occurs. If the Lab image is not compressed, the color conversion is the only necessary step. The Lab image must be up interpolated (if the a and b channels are compressed) and converted into a CMY image. A single VLIW process combining scale and color transform can be used.

The method used to perform the color conversion is the Vark accelerated Color Convert function. The Affine Transform engine can be called to rotate each color channel independently. The color channels cannot be rotated in place. Instead, they can make use of the space previously used for the expanded single channel (1.5MB).

Print the Image

Printing an image is concerned with taking a correctly oriented 1000 x 1500 CMY image, and generating data and signals to be sent to the external Print Head. The process involves the CPU working in conjunction with a VLIW process and the Print Head Interface.

The resolution of the image in the Artcam is 1000 x 1500. The printed image has a resolution of 6000 x 9000 dots, which makes for a very straightforward relationship: 1 pixel = 6 x 6 = 36 dots. As shown in Fig. 156 since each dot is 16.6 m, the 6 x 6 dot square is 100 m square. Since each of the dots is bi-level, the output must be dithered.

The image should be printed in approximately 2 seconds. For 9000 rows of dots this implies a time of 222 s time between printing each row. The Print Head Interface must generate the 6000 dots in this time, an average of 37ns per dot. However, each dot comprises 3 colors, so the Print Head Interface must generate each color component in approximately 12ns, or 1 clock cycle of the ACP (10ns at 100 MHz). One VLIW process is responsible for calculating the next line of 6000 dots to be printed. The odd and even C, M, and Y dots are generated by dithering input from 6 different 1000 x 1500 CMY image lines. The second VLIW process is responsible for taking the previously calculated line of 6000 dots, and correctly generating the 8 bits of data for the 8 segments to be transferred by the Print Head Interface to the Print Head in a single transfer.

A CPU process updates registers in the fist VLIW process 3 times per print line (once per color component = 27000 times in 2 seconds0, and in the 2nd VLIW process once every print line (9000 times in 2 seconds). The CPU works one line ahead of the VLIW process in order to do this.

Finally, the Print Head Interface takes the 8 bit data from the VLIW Output FIFO, and outputs it unchanged to the Print Head, producing the BitClock signals appropriately. Once all the data has been transferred a ParallelXferClock signal is generated to load the data for the next print line. In conjunction with transferring the data to the Print Head, a separate timer is generating the signals for the different print cycles of the Print Head using the

NozzleSelect, ColorEnable, and BankEnable lines a specified by Print Head Interface internal registers.

The CPU also controls the various motors and guillotine via the parallel interface during the print process.

Generate C, M, and Y Dots

The input to this process is a 1000 x 1500 CMY image correctly oriented for printing. The image is not compressed in any way. As illustrated in Fig. 157, a VLIW microcode program takes the CMY image, and generates the C, M, and Y pixels required by the Print Head Interface to be dithered.

The process is run 3 times, once for each of the 3 color components. The process consists of 2 sub-processes run in parallel – one for producing even dots, and the other for producing odd dots. Each sub-process takes one pixel from the input image, and produces 3 output dots (since one pixel = 6 output dots, and each sub-process is concerned with either even or odd dots). Thus one output dot is generated each cycle, but an input pixel is only read once every 3 cycles.

The original dither cell is a 64 x 64 cell, with each entry 8 bits. This original cell is divided into an odd cell and an even cell, so that each is still 64 high, but only 32 entries wide. The even dither cell contains original dither cell pixels 0, 2, 4 etc., while the odd contains original dither cell pixels 1, 3, 5 etc. Since a dither cell repeats across a line, a single 32 byte line of each of the 2 dither cells is required during an entire line, and can therefore be completely cached. The odd and even lines of a single process line are staggered 8 dot lines apart, so it is convenient to rotate the odd dither cell's lines by 8 lines. Therefore the same offset into both odd and even dither cells can be used. Consequently the even dither cell's line corresponds to the even entries of line L in the original dither cell, and the even dither cell's line corresponds to the odd entries of line L+8 in the original dither cell.

The process is run 3 times, once for each of the color components. The CPU software routine must ensure that the Sequential Read Iterators for odd and even lines are pointing to the correct image lines corresponding to the print heads. For example, to produce one set of 18,000 dots (3 sets of 6000 dots):

- Yellow even dot line = 0, therefore input Yellow image line = 0/6 = 0
- Yellow odd dot line = 8, therefore input Yellow image line = 8/6 = 1
- Magenta even line = 10, therefore input Magenta image line = 10/6 = 1
- Magenta odd line = 18, therefore input Magenta image line = 18/6 = 3
- Cyan even line = 20, therefore input Cyan image line = 20/6 = 3
- Cyan odd line = 28, therefore input Cyan image line = 28/6 = 4

Subsequent sets of input image lines are:

- Y=[0, 1], M=[1, 3], C=[3, 4]
- Y=[0, 1], M=[1, 3], C=[3, 4]
- Y=[0, 1], M=[2, 3], C=[3, 5]
- Y=[0, 1], M=[2, 3], C=[3, 5]
- Y=[0, 2], M=[2, 3], C=[4, 5]

The dither cell data however, does not need to be updated for each color component. The dither cell for the 3 colors becomes the same, but offset by 2 dot lines for each component.

The Dithered Output is written to a Sequential Write Iterator, with odd and even dithered dots written to 2 separate outputs. The same two Write Iterators are used for all 3 color components, so that they are contiguous within

the break-up of odd and even dots.

While one set of dots is being generated for a print line, the previously generated set of dots is being merged by a second VLIW process as described in the next section.

Generate Merged 8 bit Dot Output

This process, as illustrated in Fig. 158, takes a single line of dithered dots and generates the 8 bit data stream for output to the Print Head Interface via the VLIW Output FIFO. The process requires the entire line to have been prepared, since it requires semi-random access to most of the dithered line at once. The following constant is set by software:

Constant	Value
K_1	375

The Sequential Read Iterators point to the line of previously generated dots, with the Iterator registers set up to limit access to a single color component. The distance between subsequent pixels is 375, and the distance between one line and the next is given to be 1 byte. Consequently 8 entries are read for each "line". A single "line" corresponds to the 8 bits to be loaded on the print head. The total number of "lines" in the image is set to be 375. With at least 8 cache lines assigned to the Sequential Read Iterator, complete cache coherence is maintained. Instead of counting the 8 bits, 8 Microcode steps count implicitly.

The generation process first reads all the entries from the even dots, combining 8 entries into a single byte which is then output to the VLIW Output FIFO. Once all 3000 even dots have been read, the 3000 odd dots are read and processed. A software routine must update the address of the dots in the odd and even Sequential Read Iterators once per color component, which equates to 3 times per line. The two VLIW processes require all 8 ALUs and the VLIW Output FIFO. As long as the CPU is able to update the registers as described in the two processes, the VLIW processor can generate the dithered image dots fast enough to keep up with the printer.

Data Card Reader

Fig. 159, there is illustrated on form of card reader 500 which allows for the insertion of Artcards 9 for reading. Fig. 158 shows an exploded perspective of the reader of Fig. 159. Cardreader is interconnected to a computer system and includes a CCD reading mechanism 35. The cardreader includes pinch rollers 506, 507 for pinching an inserted Artcard 9. One of the roller e.g. 506 is driven by an Artcard motor 37 for the advancement of the card 9 between the two rollers 506 and 507 at a uniformed speed. The Artcard 9 is passed over a series of LED lights 512 which are encased within a clear plastic mould 514 having a semi circular cross section. The cross section focuses the light from the LEDs eg 512 onto the surface of the card 9 as it passes by the LEDs 512. From the surface it is reflected to a high resolution linear CCD 34 which is constructed to a resolution of approximately 480 dpi. The surface of the Artcard 9 is encoded to the level of approximately 1600 dpi hence, the linear CCD 34 supersamples the Artcard surface with an approximately three times multiplier. The Artcard 9 is further driven at a speed such that the linear CCD 34 is able to supersample in the direction of Artcard movement at a rate of approximately 4800 readings per inch. The scanned Artcard CCD data is forwarded from the Artcard reader to ACP 31 for processing. A sensor 49, which can comprise a light sensor acts to detect of the presence of the card 13.

The CCD reader includes a bottom substrate 516, a top substrate 514 which comprises a transparent molded

plastic. In between the two substrates is inserted the linear CCD array 34 which comprises a thin long linear CCD array constructed by means of semi-conductor manufacturing processes.

Turning to Fig. 160, there is illustrated a side perspective view, partly in section, of an example construction of the CCD reader unit. The series of LEDs eg. 512 are operated to emit light when a card 9 is passing across the surface of the CCD reader 34. The emitted light is transmitted through a portion of the top substrate 523. The substrate includes a portion eg. 529 having a curved circumference so as to focus light emitted from LED 512 to a point eg. 532 on the surface of the card 9. The focused light is reflected from the point 532 towards the CCD array 34. A series of microlenses eg. 534, shown in exaggerated form, are formed on the surface of the top substrate 523. The microlenses 523 act to focus light received across the surface to the focused down to a point 536 which corresponds to point on the surface of the CCD reader 34 for sensing of light falling on the light sensing portion of the CCD array 34.

A number of refinements of the above arrangement are possible. For example, the sensing devices on the linear CCD 34 may be staggered. The corresponding microlenses 34 can also be correspondingly formed as to focus light into a staggered series of spots so as to correspond to the staggered CCD sensors.

To assist reading, the data surface area of the Artcard 9 is modulated with a checkerboard pattern as previously discussed with reference to Fig. 38. Other forms of high frequency modulation may be possible however.

It will be evident that an Artcard printer can be provided as for the printing out of data on storage Artcard. Hence, the Artcard system can be utilized as a general form of information distribution outside of the Artcam device. An Artcard printer can prints out Artcards on high quality print surfaces and multiple Artcards can be printed on same sheets and later separated. On a second surface of the Artcard 9 can be printed information relating to the files etc. stored on the Artcard 9 for subsequent storage.

Hence, the Artcard system allows for a simplified form of storage which is suitable for use in place of other forms of storage such as CD ROMs, magnetic disks etc. The Artcards 9 can also be mass produced and thereby produced in a substantially inexpensive form for redistribution.

Print Rolls

Turning to Fig. 162, there is illustrated the print roll 42 and print-head portions of the Artcam. The paper/film 611 is fed in a continuous "web-like" process to a printing mechanism 15 which includes further pinch rollers 616 - 619 and a print head 44

The pinch roller 613 is connected to a drive mechanism (not shown) and upon rotation of the print roller 613, "paper" in the form of film 611 is forced through the printing mechanism 615 and out of the picture output slot 6. A rotary guillotine mechanism (not shown) is utilised to cut the roll of paper 611 at required photo sizes.

It is therefore evident that the printer roll 42 is responsible for supplying "paper" 611 to the print mechanism 615 for printing of photographically imaged pictures.

In Fig. 163, there is shown an exploded perspective of the print roll 42. The printer roll 42 includes output printer paper 611 which is output under the operation of pinching rollers 612, 613.

Referring now to Fig. 164, there is illustrated a more fully exploded perspective view, of the print roll 42 of Fig. 163 without the "paper" film roll. The print roll 42 includes three main parts comprising ink reservoir section 620, paper roll sections 622, 623 and outer casing sections 626, 627.

Turning first to the ink reservoir section 620, which includes the ink reservoir or ink supply sections 633. The ink for printing is contained within three bladder type containers 630 - 632. The printer roll 42 is assumed to provide

full color output inks. Hence, a first ink reservoir or bladder container 630 contains cyan colored ink. A second reservoir 631 contains magenta colored ink and a third reservoir 632 contains yellow ink. Each of the reservoirs 630 - 632, although having different volumetric dimensions, are designed to have substantially the same volumetric size.

The ink reservoir sections 621, 633, in addition to cover 624 can be made of plastic sections and are designed to be mated together by means of heat sealing, ultra violet radiation, etc. Each of the equally sized ink reservoirs 630 - 632 is connected to a corresponding ink channel 639 - 641 for allowing the flow of ink from the reservoir 630 - 632 to a corresponding ink output port 635 - 637. The ink reservoir 632 having ink channel 641, and output port 637, the ink reservoir 631 having ink channel 640 and output port 636, and the ink reservoir 630 having ink channel 639 and output port 637.

In operation, the ink reservoirs 630 - 632 can be filled with corresponding ink and the section 633 joined to the section 621. The ink reservoir sections 630 - 632, being collapsible bladders, allow for ink to traverse ink channels 639 - 641 and therefore be in fluid communication with the ink output ports 635 - 637. Further, if required, an air inlet port can also be provided to allow the pressure associated with ink channel reservoirs 630 - 632 to be maintained as required.

The cap 624 can be joined to the ink reservoir section 620 so as to form a pressurized cavity, accessible by the air pressure inlet port.

The ink reservoir sections 621, 633 and 624 are designed to be connected together as an integral unit and to be inserted inside printer roll sections 622, 623. The printer roll sections 622, 623 are designed to mate together by means of a snap fit by means of male portions 645 - 647 mating with corresponding female portions (not shown). Similarly, female portions 654 - 656 are designed to mate with corresponding male portions 660 - 662. The paper roll sections 622, 623 are therefore designed to be snapped together. One end of the film within the role is pinched between the two sections 622, 623 when they are joined together. The print film can then be rolled on the print roll sections 622, 625 as required.

As noted previously, the ink reservoir sections 620, 621, 633, 624 are designed to be inserted inside the paper roll sections 622, 623. The printer roll sections 622, 623 are able to be rotatable around stationery ink reservoir sections 621, 633 and 624 to dispense film on demand.

The outer casing sections 626 and 627 are further designed to be coupled around the print roller sections 622, 623. In addition to each end of pinch rollers eg 612, 613 is designed to clip in to a corresponding cavity eg 670 in cover 626, 627 with roller 613 being driven externally (not shown) to feed the print film and out of the print roll.

Finally, a cavity 677 can be provided in the ink reservoir sections 620, 621 for the insertion and gluing of an silicon chip integrated circuit type device 53 for the storage of information associated with the print roll 42.

As shown in Fig. 155 and Fig. 164, the print roll 42 is designed to be inserted into the Artcam camera device so as to couple with a coupling unit 680 which includes connector pads 681 for providing a connection with the silicon chip 53. Further, the connector 680 includes end connectors of four connecting with ink supply ports 635 - 637. The ink supply ports are in turn to connect to ink supply lines eg 682 which are in turn interconnected to printheads supply ports eg. 687 for the flow of ink to print-head 44 in accordance with requirements.

The "media" 611 utilised to form the roll can comprise many different materials on which it is designed to print suitable images. For example, opaque rollable plastic material may be utilized, transparencies may be used by using transparent plastic sheets, metallic printing can take place via utilization of a metallic sheet film. Further,

fabrics could be utilised within the printer roll 42 for printing images on fabric, although care must be taken that only fabrics having a suitable stiffness or suitable backing material are utilised.

When the print media is plastic, it can be coated with a layer which fixes and absorbs the ink. Further, several types of print media may be used, for example, opaque white matte, opaque white gloss, transparent film, frosted transparent film, lenticular array film for stereoscopic 3D prints, metallised film, film with the embossed optical variable devices such as gratings or holograms, media which is pre-printed on the reverse side, and media which includes a magnetic recording layer. When utilising a metallic foil, the metallic foil can have a polymer base, coated with a thin (several micron) evaporated layer of aluminum or other metal and then coated with a clear protective layer adapted to receive the ink via the ink printer mechanism.

In use the print roll 42 is obviously designed to be inserted inside a camera device so as to provide ink and paper for the printing of images on demand. The ink output ports 635 - 637 meet with corresponding ports within the camera device and the pinch rollers 672, 673 are operated to allow the supply of paper to the camera device under the control of the camera device.

As illustrated in Fig. 164, a mounted silicon chip 53 is insert in one end of the print roll 42. In Fig. 165 the authentication chip 53 is shown in more detail and includes four communications leads 680 - 683 for communicating details from the chip 53 to the corresponding camera to which it is inserted.

Turning to Fig. 165, the chip can be separately created by means of encasing a small integrated circuit 687 in epoxy and running bonding leads eg. 688 to the external communications leads 680 - 683. The integrated chip 687 being approximately 400 microns square with a 100 micron scribe boundary. Subsequently, the chip can be glued to an appropriate surface of the cavity of the print roll 42. In Fig. 166, there is illustrated the integrated circuit 687 interconnected to bonding pads 681, 682 in an exploded view of the arrangement of Fig. 165.

Authentication Chip

Authentication Chips 53

The authentication chip 53 of the preferred embodiment is responsible for ensuring that only correctly manufactured print rolls are utilized in the camera system. The authentication chip 53 utilizes technologies that are generally valuable when utilized with any consumables and are not restricted to print roll system. Manufacturers of other systems that require consumables (such as a laser printer that requires toner cartridges) have struggled with the problem of authenticating consumables, to varying levels of success. Most have resorted to specialized packaging. However this does not stop home refill operations or clone manufacture. The prevention of copying is important to prevent poorly manufactured substitute consumables from damaging the base system. For example, poorly filtered ink may clog print nozzles in an ink jet printer, causing the consumer to blame the system manufacturer and not admit the use of non-authorized consumables.

To solve the authentication problem, the Authentication chip 53 contains an authentication code and circuit specially designed to prevent copying. The chip is manufactured using the standard Flash memory manufacturing process, and is low cost enough to be included in consumables such as ink and toner cartridges. Once programmed, the Authentication chips as described here are compliant with the NSA export guidelines. Authentication is an extremely

large and constantly growing field. Here we are concerned with authenticating consumables only.

Symbolic Nomenclature

The following symbolic nomenclature is used throughout the discussion of this embodiment:

Symbolic Nomenclature	Description
F[X]	Function F, taking a single parameter X
F[X, Y]	Function F, taking two parameters, X and Y
X | Y	X concatenated with Y
X ∧ Y	Bitwise X AND Y
X ∨ Y	Bitwise X OR Y (inclusive-OR)
X⊕Y	Bitwise X XOR Y (exclusive-OR)
~X	Bitwise NOT X (complement)
X ← Y	X is assigned the value Y
X ← {Y, Z}	The domain of assignment inputs to X is Y and Z.
X = Y	X is equal to Y
X ≠ Y	X is not equal to Y
⇓X	Decrement X by 1 (floor 0)
X	Increment X by 1 (with wrapping based on register length)
Erase X	Erase Flash memory register X
SetBits[X, Y]	Set the bits of the Flash memory register X based on Y
Z ← ShiftRight[X, Y]	Shift register X right one bit position, taking input bit from Y and placing the output bit in Z

Basic Terms

A message, denoted by **M**, is **plaintext**. The process of transforming M into **cyphertext C**, where the substance of M is hidden, is called **encryption**. The process of transforming C back into M is called **decryption**. Referring to the encryption function as **E**, and the decryption function as **D**, we have the following identities:

$$E[M] = C$$

$$D[C] = M$$

Therefore the following identity is true:

$$D[E[M]] = M$$

Symmetric Cryptography

A symmetric encryption algorithm is one where:

the encryption function E relies on key K_1,

the decryption function D relies on key K_2,

K_2 can be derived from K_1, and

K_1 can be derived from K_2.

In most symmetric algorithms, K_1 usually equals K_2. However, even if K_1 does not equal K_2, given that one key can be derived from the other, a single key K can suffice for the mathematical definition. Thus:

$$E_K[M] = C$$

$$D_K[C] = M$$

An enormous variety of symmetric algorithms exist, from the textbooks of ancient history through to sophisticated modern algorithms. Many of these are insecure, in that modern cryptanalysis techniques can successfully attack the algorithm to the extent that K can be derived. The security of the particular symmetric algorithm is normally a function of two things: the strength of the algorithm and the length of the key. The following algorithms include suitable aspects for utilization in the authentication chip.

DES

Blowfish

RC5

IDEA

DES

DES (Data Encryption Standard) is a US and international standard, where the same key is used to encrypt and decrypt. The key length is 56 bits. It has been implemented in hardware and software, although the original design was for hardware only. The original algorithm used in DES is described in US patent 3,962,539. A variant of DES, called triple-DES is more secure, but requires 3 keys: K_1, K_2, and K_3.The keys are used in the following manner:

$$E_{K3}[D_{K2}[E_{K1}[M]]] = C$$

$$D_{K3}[E_{K2}[D_{K1}[C]]] = M$$

The main advantage of triple-DES is that existing DES implementations can be used to give more security than single key DES. Specifically, triple-DES gives protection of equivalent key length of 112 bits. Triple-DES does not give the equivalent protection of a 168-bit key (3 x 56) as one might naively expect. Equipment that performs triple-DES decoding and/or encoding cannot be exported from the United States.

Blowfish

Blowfish, is a symmetric block cipher first presented by Schneier in 1994. It takes a variable length key, from 32 bits to 448 bits. In addition, it is much faster than DES. The Blowfish algorithm consists of two parts: a key-expansion part and a data-encryption part. Key expansion converts a key of at most 448 bits into several subkey arrays totaling 4168 bytes. Data encryption occurs via a 16-round Feistel network. All operations are XORs and additions on 32-bit words, with four index array lookups per round. It should be noted that decryption is the same as encryption except that the subkey arrays are used in the reverse order. Complexity of implementation is therefore reduced compared to other algorithms that do not have such symmetry.

RC5

Designed by Ron Rivest in 1995, RC5 has a variable block size, key size, and number of rounds. Typically, however, it uses a 64-bit block size and a 128-bit key. The RC5 algorithm consists of two parts: a key-expansion part and a data-encryption part. Key expansion converts a key into 2r+2 subkeys (where r = the number of rounds), each subkey being w bits. For a 64-bit blocksize with 16 rounds (w=32, r=16), the subkey arrays total 136 bytes. Data encryption uses addition mod 2^w, XOR and bitwise rotation.

IDEA

Developed in 1990 by Lai and Massey, the first incarnation of the IDEA cipher was called PES. After differential cryptanalysis was discovered by Biham and Shamir in 1991, the algorithm was strengthened, with the result being published in 1992 as IDEA. IDEA uses 128 bit-keys to operate on 64-bit plaintext blocks. The same algorithm is used for encryption and decryption. It is generally regarded to be the most secure block algorithm available today. It is described in US Patent No.5,214,703, issued in 1993.

Asymmetric Cryptography

As alternative an asymmetric algorithm could be used. An asymmetric encryption algorithm is one where:

the encryption function E relies on key K_1,

the decryption function D relies on key K_2,

K_2 cannot be derived from K_1 in a reasonable amount of time, and

K_1 cannot be derived from K_2 in a reasonable amount of time.

Thus:

$$E_{K1}[M] = C$$

$$D_{K2}[C] = M$$

These algorithms are also called **public-key** because one key K_1 can be made public. Thus anyone can encrypt a message (using K_1), but only the person with the corresponding decryption key (K_2) can decrypt and thus read the message. In most cases, the following identity also holds:

$$E_{K2}[M] = C$$

$$D_{K1}[C] = M$$

This identity is very important because it implies that anyone with the public key K_1 can see M and know that it came from the owner of K_2. No-one else could have generated C because to do so would imply knowledge of K_2. The property of not being able to derive K_1 from K_2 and vice versa in a reasonable time is of course clouded by the concept of reasonable time. What has been demonstrated time after time, is that a calculation that was thought to require a long time has been made possible by the introduction of faster computers, new algorithms etc. The security of asymmetric algorithms is based on the difficulty of one of two problems: factoring large numbers (more specifically large numbers that are the product of two large primes), and the difficulty of calculating discrete logarithms in a finite field. Factoring large numbers is conjectured to be a hard problem given today's understanding of mathematics. The problem however, is that factoring is getting easier much faster than anticipated. Ron Rivest in 1977 said that factoring a 125-digit number would take 40 quadrillion years. In 1994 a 129-digit number was factored. According to Schneier, you need a 1024-bit number to get the level of security today that you got from a 512-bit number in the 1980's. If the key is to last for some years then 1024 bits may not even be enough. Rivest revised his key length estimates in 1990: he suggests 1628 bits for high security lasting until 2005, and 1884 bits for high security lasting until 2015. By contrast, Schneier suggests 2048 bits are required in order to protect against corporations and governments until 2015.

A number of public key cryptographic algorithms exist. Most are impractical to implement, and many generate a very large C for a given M or require enormous keys. Still others, while secure, are far too slow to be practical for several years. Because of this, many public-key systems are hybrid – a public key mechanism is used to transmit a symmetric session key, and then the session key is used for the actual messages. All of the algorithms have a problem in terms of key selection. A random number is simply not secure enough. The two large primes p and q must be chosen carefully –

there are certain weak combinations that can be factored more easily (some of the weak keys can be tested for). But nonetheless, key selection is not a simple matter of randomly selecting 1024 bits for example. Consequently the key selection process must also be secure.

Of the practical algorithms in use under public scrutiny, the following may be suitable for utilization:

RSA

DSA

ElGamal

RSA

The RSA cryptosystem, named after Rivest, Shamir, and Adleman, is the most widely used public-key cryptosystem, and is a de facto standard in much of the world. The security of RSA is conjectured to depend on the difficulty of factoring large numbers that are the product of two primes (p and q). There are a number of restrictions on the generation of p and q. They should both be large, with a similar number of bits, yet not be close to one another (otherwise $pq \approx \sqrt{pq}$). In addition, many authors have suggested that p and q should be strong primes. The RSA algorithm patent was issued in 1983 (US patent number 4,405,829).

DSA

DSA (Digital Signature Standard) is an algorithm designed as part of the Digital Signature Standard (DSS). As defined, it cannot be used for generalized encryption. In addition, compared to RSA, DSA is 10 to 40 times slower for signature verification. DSA explicitly uses the SHA-1 hashing algorithm (see definition in

One-way Functions below). DSA key generation relies on finding two primes p and q such that q divides p-1. According to Schneier, a 1024-bit p value is required for long term DSA security. However the DSA standard does not permit values of p larger than 1024 bits (p must also be a multiple of 64 bits). The US Government owns the DSA algorithm and has at least one relevant patent (US patent 5,231,688 granted in 1993).

ElGamal

The ElGamal scheme is used for both encryption and digital signatures. The security is based on the difficulty of calculating discrete logarithms in a finite field. Key selection involves the selection of a prime p, and two random numbers g and x such that both g and x are less than p. Then calculate $y = g^x \bmod p$. The public key is y, g, and p. The private key is x.

Cryptographic Challenge-Response Protocols and Zero Knowledge Proofs

The general principle of a challenge-response protocol is to provide identity authentication adapted to a camera system. The simplest form of challenge-response takes the form of a secret password. A asks B for the secret password, and if B responds with the correct password, A declares B authentic. There are three main problems with this kind of simplistic protocol. Firstly, once B has given out the password, any observer C will know what the password is. Secondly, A must know the password in order to verify it. Thirdly, if C impersonates A, then B will give the password to C (thinking C was A), thus compromising B. Using a copyright text (such as a haiku) is a weaker alternative as we are assuming that anyone is able to copy the password (for example in a country where intellectual property is not respected). The idea of cryptographic challenge-response protocols is that one entity (the claimant) proves its identity to another (the verifier) by demonstrating knowledge of a secret known to be associated with that entity, without revealing the secret itself to the verifier during the protocol. In the generalized case of cryptographic challenge-

response protocols, with some schemes the verifier knows the secret, while in others the secret is not even known by the verifier. Since the discussion of this embodiment specifically concerns Authentication, the actual cryptographic challenge-response protocols used for authentication are detailed in the appropriate sections. However the concept of Zero Knowledge Proofs will be discussed here. The Zero Knowledge Proof protocol, first described by Feige, Fiat and Shamir is extensively used in Smart Cards for the purpose of authentication. The protocol's effectiveness is based on the assumption that it is computationally infeasible to compute square roots modulo a large composite integer with unknown factorization. This is provably equivalent to the assumption that factoring large integers is difficult. It should be noted that there is no need for the claimant to have significant computing power. Smart cards implement this kind of authentication using only a few modular multiplications. The Zero Knowledge Proof protocol is described in US Patent 4,748,668.

One-way Functions

A one-way function F operates on an input X, and returns F[X] such that X cannot be determined from F[X]. When there is no restriction on the format of X, and F[X] contains fewer bits than X, then collisions must exist. A collision is defined as two different X input values producing the same F[X] value - i.e. X_1 and X_2 exist such that X_1 X_2 yet $F[X_1] = F[X_2]$. When X contains more bits than F[X], the input must be compressed in some way to create the output. In many cases, X is broken into blocks of a particular size, and compressed over a number of rounds, with the output of one round being the input to the next. The output of the hash function is the last output once X has been consumed. A pseudo-collision of the compression function CF is defined as two different initial values V_1 and V_2 and two inputs X_1 and X_2 (possibly identical) are given such that $CF(V_1, X_1) = CF(V_2, X_2)$. Note that the existence of a pseudo-collision does not mean that it is easy to compute an X_2 for a given X_1.

We are only interested in one-way functions that are fast to compute. In addition, we are only interested in deterministic one-way functions that are repeatable in different implementations. Consider an example F where F[X] is the time between calls to F. For a given F[X] X cannot be determined because X is not even used by F. However the output from F will be different for different implementations. This kind of F is therefore not of interest.

In the scope of the discussion of the implementation of the authentication chip of this embodiment, we are interested in the following forms of one-way functions:

Encryption using an unknown key

Random number sequences

Hash Functions

Message Authentication Codes

Encryption Using an Unknown Key

When a message is encrypted using an unknown key K, the encryption function E is effectively one-way. Without the key, it is computationally infeasible to obtain M from $E_K[M]$ without K. An encryption function is only one-way for as long as the key remains hidden. An encryption algorithm does not create collisions, since E creates $E_K[M]$ such that it is possible to reconstruct M using function D. Consequently F[X] contains at least as many bits as X (no information is lost) if the one-way function F is E. Symmetric encryption algorithms (see above) have the advantage over Asymmetric algorithms for producing one-way functions based on encryption for the following reasons:

The key for a given strength encryption algorithm is shorter for a symmetric algorithm than an asymmetric algorithm

Symmetric algorithms are faster to compute and require less software/silicon

The selection of a good key depends on the encryption algorithm chosen. Certain keys are not strong for particular encryption algorithms, so any key needs to be tested for strength. The more tests that need to be performed for key selection, the less likely the key will remain hidden.

Random Number Sequences

Consider a random number sequence R_0, R_1, ..., R_i, R_{i+1}. We define the one-way function F such that F[X] returns the Xth random number in the random sequence. However we must ensure that F[X] is repeatable for a given X on different implementations. The random number sequence therefore cannot be truly random. Instead, it must be pseudo-random, with the generator making use of a specific seed.

There are a large number of issues concerned with defining good random number generators. Knuth, describes what makes a generator "good" (including statistical tests), and the general problems associated with constructing them. The majority of random number generators produce the ith random number from the $i\text{-}1^{th}$ state – the only way to determine the ith number is to iterate from the 0th number to the ith. If i is large, it may not be practical to wait for i iterations. However there is a type of random number generator that does allow random access. Blum, Blum and Shub define the ideal generator as follows:"... we would like a pseudo-random sequence generator to quickly produce, from short seeds, long sequences (of bits) that appear in every way to be generated by successive flips of a fair coin". They defined the ^{2} **mod n** generator, more commonly referred to as the BBS generator. They showed that given certain assumptions upon which modern cryptography relies, a BBS generator passes extremely stringent statistical tests.

The BBS generator relies on selecting n which is a Blum integer (n = pq where p and q are large prime numbers, $p \neq q$, p mod 4 = 3, and q mod 4 = 3). The initial state of the generator is given by $_0$ where $_0 = ^2$ mod n, and x is a random integer relatively prime to n. The ith pseudo-random bit is the least significant bit of x_i where $x_i = x_{i-1}^2$ mod n. As an extra property, knowledge of p and q allows a direct calculation of the ith number in the sequence as follows: $x_i = {}_0^y$ mod n, where $y = 2^i$ mod ((p-1)(q-1))

Without knowledge of p and q, the generator must iterate (the security of calculation relies on the difficulty of factoring large numbers). When first defined, the primary problem with the BBS generator was the amount of work required for a single output bit. The algorithm was considered too slow for most applications. However the advent of Montgomery reduction arithmetic has given rise to more practical implementations. In addition, Vazirani and Vazirani have shown that depending on the size of n, more bits can safely be taken from x_i without compromising the security of the generator. Assuming we only take 1 bit per x_i, N bits (and hence N iterations of the bit generator function) are needed in order to generate an N-bit random number. To the outside observer, given a particular set of bits, there is no way to determine the next bit other than a 50/50 probability. If the x, p and q are hidden, they act as a key, and it is computationally unfeasible to take an output bit stream and compute x, p, and q. It is also computationally unfeasible to determine the value of i used to generate a given set of pseudo-random bits. This last feature makes the generator one-way. Different values of i can produce identical bit sequences of a given length (e.g. 32 bits of random bits). Even if x, p and q are known, for a given F[i], i can only be derived as a set of possibilities, not as a certain value (of course if the domain of i is known, then the set of possibilities is reduced further). However, there are problems in selecting a good p and q, and a good seed x. In particular, Ritter describes a problem in selecting x. The nature of the problem is that a

BBS generator does not create a single cycle of known length. Instead, it creates cycles of various lengths, including degenerate (zero-length) cycles. Thus a BBS generator cannot be initialized with a random state – it might be on a short cycle.

Hash Functions

Special one-way functions, known as Hash functions map arbitrary length messages to fixed-length hash values. Hash functions are referred to as H[M]. Since the input is arbitrary length, a hash function has a compression component in order to produce a fixed length output. Hash functions also have an obfuscation component in order to make it difficult to find collisions and to determine information about M from H[M]. Because collisions do exist, most applications require that the hash algorithm is preimage resistant, in that for a given X_1 it is difficult to find X_2 such that $H[X_1] = H[X_2]$. In addition, most applications also require the hash algorithm to be collision resistant (i.e. it should be hard to find two messages X_1 and X_2 such that $H[X_1] = H[X_2]$). It is an open problem whether a collision-resistant hash function, in the idealist sense, can exist at all. The primary application for hash functions is in the reduction of an input message into a digital "fingerprint" before the application of a digital signature algorithm. One problem of collisions with digital signatures can be seen in the following example.

> A has a long message M_1 that says "I owe B $10". A signs $H[M_1]$ using his private key. B, being greedy, then searches for a collision message M_2 where $H[M_2] = H[M_1]$ but where M_2 is favorable to B, for example "I owe B $1million". Clearly it is in A's interest to ensure that it is difficult to find such an M_2.

Examples of collision resistant one-way hash functions are SHA-1, MD5 and RIPEMD-160, all derived from MD4.

MD4

Ron Rivest introduced MD4 in 1990. It is mentioned here because all other one-way hash functions are derived in some way from MD4. MD4 is now considered completely broken in that collisions can be calculated instead of searched for. In the example above, B could trivially generate a substitute message M_2 with the same hash value as the original message M_1.

MD5

Ron Rivest introduced MD5 in 1991 as a more secure MD4. Like MD4, MD5 produces a 128-bit hash value. Dobbertin describes the status of MD5 after recent attacks. He describes how pseudo-collisions have been found in MD5, indicating a weakness in the compression function, and more recently, collisions have been found. This means that MD5 should not be used for compression in digital signature schemes where the existence of collisions may have dire consequences. However MD5 can still be used as a one-way function. In addition, the HMAC-MD5 construct is not affected by these recent attacks.

SHA-1

SHA-1 is very similar to MD5, but has a 160-bit hash value (MD5 only has 128 bits of hash value). SHA-1 was designed and introduced by the NIST and NSA for use in the Digital Signature Standard (DSS). The original published description was called SHA, but very soon afterwards, was revised to become SHA-1, supposedly to correct a security flaw in SHA (although the NSA has not released the mathematical reasoning behind the change). There are no known cryptographic attacks against SHA-1. It is also more resistant to brute-force attacks than MD4 or MD5 simply because of the longer hash result. The US Government owns the SHA-1 and DSA algorithms (a digital signature authentication algorithm defined as part of DSS) and has at least one relevant patent (US patent 5,231,688 granted in

1993).

RIPEMD-160

RIPEMD-160 is a hash function derived from its predecessor RIPEMD (developed for the European Community's RIPE project in 1992). As its name suggests, RIPEMD-160 produces a 160-bit hash result. Tuned for software implementations on 32-bit architectures, RIPEMD-160 is intended to provide a high level of security for 10 years or more. Although there have been no successful attacks on RIPEMD-160, it is comparatively new and has not been extensively cryptanalyzed. The original RIPEMD algorithm was specifically designed to resist known cryptographic attacks on MD4. The recent attacks on MD5 showed similar weaknesses in the RIPEMD 128-bit hash function. Although the attacks showed only theoretical weaknesses, Dobbertin, Preneel and Bosselaers further strengthened RIPEMD into a new algorithm RIPEMD-160.

Message Authentication Codes

The problem of message authentication can be summed up as follows:

How can A be sure that a message supposedly from B is in fact from B?

Message authentication is different from entity authentication. With entity authentication, one entity (the claimant) proves its identity to another (the verifier). With message authentication, we are concerned with making sure that a given message is from who we think it is from i.e. it has not been tampered en route from the source to its destination. A one-way hash function is not sufficient protection for a message. Hash functions such as MD5 rely on generating a hash value that is representative of the original input, and the original input cannot be derived from the hash value. A simple attack by E, who is in-between A and B, is to intercept the message from B, and substitute his own. Even if A also sends a hash of the original message, E can simply substitute the hash of his new message. Using a one-way hash function alone, A has no way of knowing that B's message has been changed. One solution to the problem of message authentication is the Message Authentication Code, or MAC. When B sends message M, it also sends MAC[M] so that the receiver will know that M is actually from B. For this to be possible, only B must be able to produce a MAC of M, and in addition, A should be able to verify M against MAC[M]. Notice that this is different from encryption of M - MACs are useful when M does not have to be secret. The simplest method of constructing a MAC from a hash function is to encrypt the hash value with a symmetric algorithm:

Hash the input message H[M]

Encrypt the hash E_K[H[M]]

This is more secure than first encrypting the message and then hashing the encrypted message. Any symmetric or asymmetric cryptographic function can be used. However, there are advantages to using a key-dependant one-way hash function instead of techniques that use encryption (such as that shown above):

Speed, because one-way hash functions in general work much faster than encryption;

Message size, because E_K[H[M]] is at least the same size as M, while H[M] is a fixed size (usually considerably smaller than M);

Hardware/software requirements – keyed one-way hash functions are typically far less complexity than their encryption-based counterparts; and

One-way hash function implementations are not considered to be encryption or decryption devices and therefore are not subject to US export controls.

It should be noted that hash functions were never originally designed to contain a key or to support message

authentication. As a result, some ad hoc methods of using hash functions to perform message authentication, including various functions that concatenate messages with secret prefixes, suffixes, or both have been proposed. Most of these ad hoc methods have been successfully attacked by sophisticated means. Additional MACs have been suggested based on XOR schemes and Toeplitz matricies (including the special case of LFSR-based constructions).

HMAC

The HMAC construction in particular is gaining acceptance as a solution for Internet message authentication security protocols. The HMAC construction acts as a wrapper, using the underlying hash function in a black-box way. Replacement of the hash function is straightforward if desired due to security or performance reasons. However, the major advantage of the HMAC construct is that it can be proven secure provided the underlying hash function has some reasonable cryptographic strengths – that is, HMAC's strengths are directly connected to the strength of the hash function. Since the HMAC construct is a wrapper, any iterative hash function can be used in an HMAC. Examples include HMAC-MD5, HMAC-SHA1, HMAC-RIPEMD160 etc. Given the following definitions:

H = the hash function (e.g. MD5 or SHA-1)

n = number of bits output from H (e.g. 160 for SHA-1, 128 bits for MD5)

M = the data to which the MAC function is to be applied

K = the secret key shared by the two parties

ipad = 0x36 repeated 64 times

opad = 0x5C repeated 64 times

The HMAC algorithm is as follows:

Extend K to 64 bytes by appending 0x00 bytes to the end of K

XOR the 64 byte string created in (1) with ipad

Append data stream M to the 64 byte string created in (2)

Apply H to the stream generated in (3)

XOR the 64 byte string created in (1) with opad

Append the H result from (4) to the 64 byte string resulting from (5)

Apply H to the output of (6) and output the result

Thus:

$$HMAC[M] = H[(K \oplus opad) \mid H[(K \oplus ipad) \mid M]]$$

The recommended key length is at least n bits, although it should not be longer than 64 bytes (the length of the hashing block). A key longer than n bits does not add to the security of the function. HMAC optionally allows truncation of the final output e.g. truncation to 128 bits from 160 bits. The HMAC designers' Request for Comments was issued in 1997, one year after the algorithm was first introduced. The designers claimed that the strongest known attack against HMAC is based on the frequency of collisions for the hash function H and is totally impractical for minimally reasonable hash functions. More recently, HMAC protocols with replay prevention components have been defined in order to prevent the capture and replay of any M, HMAC[M] combination within a given time period.

Random Numbers and Time Varying Messages

The use of a random number generator as a one-way function has already been examined. However, random number generator theory is very much intertwined with cryptography, security, and authentication. There are a large number of issues concerned with defining good random number generators. Knuth, describes what makes a generator good

(including statistical tests), and the general problems associated with constructing them. One of the uses for random numbers is to ensure that messages vary over time. Consider a system where A encrypts commands and sends them to B. If the encryption algorithm produces the same output for a given input, an attacker could simply record the messages and play them back to fool B. There is no need for the attacker to crack the encryption mechanism other than to know which message to play to B (while pretending to be A). Consequently messages often include a random number and a time stamp to ensure that the message (and hence its encrypted counterpart) varies each time. Random number generators are also often used to generate keys. It is therefore best to say at the moment, that all generators are insecure for this purpose. For example, the Berlekamp-Massey algorithm, is a classic attack on an LFSR random number generator. If the LFSR is of length n, then only 2n bits of the sequence suffice to determine the LFSR, compromising the key generator. If, however, the only role of the random number generator is to make sure that messages vary over time, the security of the generator and seed is not as important as it is for session key generation. If however, the random number seed generator is compromised, and an attacker is able to calculate future "random" numbers, it can leave some protocols open to attack. Any new protocol should be examined with respect to this situation. The actual type of random number generator required will depend upon the implementation and the purposes for which the generator is used. Generators include Blum, Blum, and Shub, stream ciphers such as RC4 by Ron Rivest, hash functions such as SHA-1 and RIPEMD-160, and traditional generators such LFSRs (Linear Feedback Shift Registers) and their more recent counterpart FCSRs (Feedback with Carry Shift Registers).

Attacks

This section describes the various types of attacks that can be undertaken to break an authentication cryptosystem such as the authentication chip. The attacks are grouped into **physical** and **logical** attacks. Physical attacks describe methods for breaking a physical implementation of a cryptosystem (for example, breaking open a chip to retrieve the key), while logical attacks involve attacks on the cryptosystem that are implementation independent. Logical types of attack work on the protocols or algorithms, and attempt to do one of three things:

Bypass the authentication process altogether

Obtain the secret key by force or deduction, so that any question can be answered

Find enough about the nature of the authenticating questions and answers in order to, without the key, give the right answer to each question.

The attack styles and the forms they take are detailed below. Regardless of the algorithms and protocol used by a security chip, the circuitry of the authentication part of the chip can come under physical attack. Physical attack comes in four main ways, although the form of the attack can vary:

Bypassing the Authentication Chip altogether

Physical examination of chip while in operation (destructive and non-destructive)

Physical decomposition of chip

Physical alteration of chip

The attack styles and the forms they take are detailed below. This section does not suggest solutions to these attacks. It merely describes each attack type. The examination is restricted to the context of an Authentication chip 53 (as opposed to some other kind of system, such as Internet authentication) attached to some System.

Logical Attacks

These attacks are those which do not depend on the physical implementation of the cryptosystem. They work against

the protocols and the security of the algorithms and random number generators.

Ciphertext only attack

This is where an attacker has one or more encrypted messages, all encrypted using the same algorithm. The aim of the attacker is to obtain the plaintext messages from the encrypted messages. Ideally, the key can be recovered so that all messages in the future can also be recovered.

Known plaintext attack

This is where an attacker has both the plaintext and the encrypted form of the plaintext. In the case of an Authentication Chip, a known-plaintext attack is one where the attacker can see the data flow between the System and the Authentication Chip. The inputs and outputs are observed (not chosen by the attacker), and can be analyzed for weaknesses (such as birthday attacks or by a search for differentially interesting input/output pairs). A known plaintext attack is a weaker type of attack than the chosen plaintext attack, since the attacker can only observe the data flow. A known plaintext attack can be carried out by connecting a logic analyzer to the connection between the System and the Authentication Chip.

Chosen plaintext attacks

A chosen plaintext attack describes one where a cryptanalyst has the ability to send any chosen message to the cryptosystem, and observe the response. If the cryptanalyst knows the algorithm, there may be a relationship between inputs and outputs that can be exploited by feeding a specific output to the input of another function. On a system using an embedded Authentication Chip, it is generally very difficult to prevent chosen plaintext attacks since the cryptanalyst can logically pretend he/she is the System, and thus send any chosen bit-pattern streams to the Authentication Chip.

Adaptive Chosen plaintext attacks

This type of attack is similar to the chosen plaintext attacks except that the attacker has the added ability to modify subsequent chosen plaintexts based upon the results of previous experiments. This is certainly the case with any System / Authentication Chip scenario described when utilized for consumables such as photocopiers and toner cartridges, especially since both Systems and Consumables are made available to the public.

Brute force attack

A guaranteed way to break any key-based cryptosystem algorithm is simply to try every key. Eventually the right one will be found. This is known as a **Brute Force Attack**. However, the more key possibilities there are, the more keys must be tried, and hence the longer it takes (on average) to find the right one. If there are N keys, it will take a maximum of N tries. If the key is N bits long, it will take a maximum of 2^N tries, with a 50% chance of finding the key after only half the attempts (2^{N-1}). The longer N becomes, the longer it will take to find the key, and hence the more secure the key is. Of course, an attack may guess the key on the first try, but this is more unlikely the longer the key is. Consider a key length of 56 bits. In the worst case, all 2^{56} tests (7.2×10^{16} tests) must be made to find the key. In 1977, Diffie and Hellman described a specialized machine for cracking DES, consisting of one million processors, each capable of running one million tests per second. Such a machine would take 20 hours to break any DES code. Consider a key length of 128 bits. In the worst case, all 2^{128} tests (3.4×10^{38} tests) must be made to find the key. This would take ten billion years on an array of a trillion processors each running 1 billion tests per second. With a long enough key length, a Brute Force Attack takes too long to be worth the attacker's efforts.

Guessing attack

This type of attack is where an attacker attempts to simply "guess" the key. As an attack it is identical to the Brute force attack, where the odds of success depend on the length of the key.

Quantum Computer attack

To break an n-bit key, a quantum computer (NMR, Optical, or Caged Atom) containing n qubits embedded in an appropriate algorithm must be built. The quantum computer effectively exists in 2^n simultaneous coherent states. The trick is to extract the right coherent state without causing any decoherence. To date this has been achieved with a 2 qubit system (which exists in 4 coherent states). It is thought possible to extend this to 6 qubits (with 64 simultaneous coherent states) within a few years.

Unfortunately, every additional qubit halves the relative strength of the signal representing the key. This rapidly becomes a serious impediment to key retrieval, especially with the long keys used in cryptographically secure systems. As a result, attacks on a cryptographically secure key (e.g. 160 bits) using a Quantum Computer are likely not to be feasible and it is extremely unlikely that quantum computers will have achieved more than 50 or so qubits within the commercial lifetime of the Authentication Chips. Even using a 50 qubit quantum computer, 2^{110} tests are required to crack a 160 bit key.

Purposeful Error Attack

With certain algorithms, attackers can gather valuable information from the results of a bad input. This can range from the error message text to the time taken for the error to be generated. A simple example is that of a userid/password scheme. If the error message usually says "Bad userid", then when an attacker gets a message saying "Bad password" instead, then they know that the userid is correct. If the message always says "Bad userid/password" then much less information is given to the attacker. A more complex example is that of the recent published method of cracking encryption codes from secure web sites. The attack involves sending particular messages to a server and observing the error message responses. The responses give enough information to learn the keys – even the lack of a response gives some information. An example of algorithmic time can be seen with an algorithm that returns an error as soon as an erroneous bit is detected in the input message. Depending on hardware implementation, it may be a simple method for the attacker to time the response and alter each bit one by one depending on the time taken for the error response, and thus obtain the key. Certainly in a chip implementation the time taken can be observed with far greater accuracy than over the Internet.

Birthday attack

This attack is named after the famous "birthday paradox" (which is not actually a paradox at all). The odds of one person sharing a birthday with another, is 1 in 365 (not counting leap years). Therefore there must be 183 people in a room for the odds to be more than 50% that one of them shares your birthday. However, there only needs to be 23 people in a room for there to be more than a 50% chance that any two share a birthday. This is because 23 people yields 253 different pairs. Birthday attacks are common attacks against hashing algorithms, especially those algorithms that combine hashing with digital signatures. If a message has been generated and already signed, an attacker must search for a collision message that hashes to the same value (analogous to finding one person who shares your birthday). However, if the attacker can generate the message, the Birthday Attack comes into play. The attacker searches for two messages that share the same hash value (analogous to any two people sharing a birthday), only one message is acceptable to the person signing it, and the other is beneficial for the attacker. Once the person has signed the original message the attacker simply claims now that the person signed the alternative message – mathematically

there is no way to tell which message was the original, since they both hash to the same value. Assuming a Brute Force Attack is the only way to determine a match, the weakening of an n-bit key by the birthday attack is $2^{n/2}$. A key length of 128 bits that is susceptible to the birthday attack has an effective length of only 64 bits.

Chaining attack

These are attacks made against the chaining nature of hash functions. They focus on the compression function of a hash function. The idea is based on the fact that a hash function generally takes arbitrary length input and produces a constant length output by processing the input n bits at a time. The output from one block is used as the chaining variable set into the next block. Rather than finding a collision against an entire input, the idea is that given an input chaining variable set, to find a substitute block that will result in the same output chaining variables as the proper message. The number of choices for a particular block is based on the length of the block. If the chaining variable is c bits, the hashing function behaves like a random mapping, and the block length is b bits, the number of such b-bit blocks is approximately 2b / 2c. The challenge for finding a substitution block is that such blocks are a sparse subset of all possible blocks. For SHA-1, the number of 512 bit blocks is approximately $2^{512}/2^{160}$, or 2^{352}. The chance of finding a block by brute force search is about 1 in 2^{160}.

Substitution with a complete lookup table

If the number of potential messages sent to the chip is small, then there is no need for a clone manufacturer to crack the key. Instead, the clone manufacturer could incorporate a ROM in their chip that had a record of all of the responses from a genuine chip to the codes sent by the system. The larger the key, and the larger the response, the more space is required for such a lookup table.

Substitution with a sparse lookup table

If the messages sent to the chip are somehow predictable, rather than effectively random, then the clone manufacturer need not provide a complete lookup table. For example:

If the message is simply a serial number, the clone manufacturer need simply provide a lookup table that contains values for past and predicted future serial numbers. There are unlikely to be more than 10^9 of these.

If the test code is simply the date, then the clone manufacturer can produce a lookup table using the date as the address.

If the test code is a pseudo-random number using either the serial number or the date as a seed, then the clone manufacturer just needs to crack the pseudo-random number generator in the System. This is probably not difficult, as they have access to the object code of the System. The clone manufacturer would then produce a content addressable memory (or other sparse array lookup) using these codes to access stored authentication codes.

Differential cryptanalysis

Differential cryptanalysis describes an attack where pairs of input streams are generated with known differences, and the differences in the encoded streams are analyzed. Existing differential attacks are heavily dependent on the structure of S boxes, as used in DES and other similar algorithms. Although other algorithms such as HMAC-SHA1 have no S boxes, an attacker can undertake a differential-like attack by undertaking statistical analysis of:

Minimal-difference inputs, and their corresponding outputs

Minimal-difference outputs, and their corresponding inputs

Most algorithms were strengthened against differential cryptanalysis once the process was described. This is covered in

the specific sections devoted to each cryptographic algorithm. However some recent algorithms developed in secret have been broken because the developers had not considered certain styles of differential attacks and did not subject their algorithms to public scrutiny.

Message substitution attacks

In certain protocols, a man-in-the-middle can substitute part or all of a message. This is where a real Authentication Chip is plugged into a reusable clone chip within the consumable. The clone chip intercepts all messages between the System and the Authentication Chip, and can perform a number of substitution attacks. Consider a message containing a header followed by content. An attacker may not be able to generate a valid header, but may be able to substitute their own content, especially if the valid response is something along the lines of "Yes, I received your message". Even if the return message is "Yes, I received the following message ...", the attacker may be able to substitute the original message before sending the acknowledgement back to the original sender. Message Authentication Codes were developed to combat most message substitution attacks.

Reverse engineering the key generator

If a pseudo-random number generator is used to generate keys, there is the potential for a clone manufacture to obtain the generator program or to deduce the random seed used. This was the way in which the Netscape security program was initially broken.

Bypassing authentication altogether

It may be that there are problems in the authentication protocols that can allow a bypass of the authentication process altogether. With these kinds of attacks the key is completely irrelevant, and the attacker has no need to recover it or deduce it. Consider an example of a system that Authenticates at power-up, but does not authenticate at any other time. A reusable consumable with a clone Authentication Chip may make use of a real Authentication Chip. The clone authentication chip 53 uses the real chip for the authentication call, and then simulates the real Authentication Chip's state data after that. Another example of bypassing authentication is if the System authenticates only after the consumable has been used. A clone Authentication Chip can accomplish a simple authentication bypass by simulating a loss of connection after the use of the consumable but before the authentication protocol has completed (or even started). One infamous attack known as the "Kentucky Fried Chip" hack involved replacing a microcontroller chip for a satellite TV system. When a subscriber stopped paying the subscription fee, the system would send out a "disable" message. However the new microcontroller would simply detect this message and not pass it on to the consumer's satellite TV system.

Garrote/bribe attack

If people know the key, there is the possibility that they could tell someone else. The telling may be due to coercion (bribe, garrote etc), revenge (e.g. a disgruntled employee), or simply for principle. These attacks are usually cheaper and easier than other efforts at deducing the key. As an example, a number of people claiming to be involved with the development of the Divx standard have recently (May/June 1998) been making noises on a variety of DVD newsgroups to the effect they would like to help develop Divx specific cracking devices – out of principle.

Physical Attacks

The following attacks assume implementation of an authentication mechanism in a silicon chip that the attacker has physical access to. The first attack, **Reading ROM**, describes an attack when keys are stored in ROM, while the remaining attacks assume that a secret key is stored in Flash memory.

Reading ROM

If a key is stored in ROM it can be read directly. A ROM can thus be safely used to hold a public key (for use in asymmetric cryptography), but not to hold a private key. In symmetric cryptography, a ROM is completely insecure. Using a copyright text (such as a haiku) as the key is not sufficient, because we are assuming that the cloning of the chip is occurring in a country where intellectual property is not respected.

Reverse engineering of chip

Reverse engineering of the chip is where an attacker opens the chip and analyzes the circuitry. Once the circuitry has been analyzed the inner workings of the chip's algorithm can be recovered. Lucent Technologies have developed an active method known as TOBIC (Two photon OBIC, where OBIC stands for Optical Beam Induced Current), to image circuits. Developed primarily for static RAM analysis, the process involves removing any back materials, polishing the back surface to a mirror finish, and then focusing light on the surface. The excitation wavelength is specifically chosen not to induce a current in the IC. A Kerckhoffs in the nineteenth century made a fundamental assumption about cryptanalysis: if the algorithm's inner workings are the sole secret of the scheme, the scheme is as good as broken. He stipulated that the secrecy must reside entirely in the key. As a result, the best way to protect against reverse engineering of the chip is to make the inner workings irrelevant.

Usurping the authentication process

It must be assumed that any clone manufacturer has access to both the System and consumable designs. If the same channel is used for communication between the System and a trusted System Authentication Chip, and a non-trusted consumable Authentication Chip, it may be possible for the non-trusted chip to interrogate a trusted Authentication Chip in order to obtain the "correct answer". If this is so, a clone manufacturer would not have to determine the key. They would only have to trick the System into using the responses from the System Authentication Chip. The alternative method of usurping the authentication process follows the same method as the logical attack "Bypassing the Authentication Process", involving simulated loss of contact with the System whenever authentication processes take place, simulating power-down etc.

Modification of System

This kind of attack is where the System itself is modified to accept clone consumables. The attack may be a change of System ROM, a rewiring of the consumable, or, taken to the extreme case, a completely clone System. This kind of attack requires each individual System to be modified, and would most likely require the owner's consent. There would usually have to be a clear advantage for the consumer to undertake such a modification, since it would typically void warranty and would most likely be costly. An example of such a modification with a clear advantage to the consumer is a software patch to change fixed-region DVD players into region-free DVD players.

Direct viewing of chip operation by conventional probing

If chip operation could be directly viewed using an STM or an electron beam, the keys could be recorded as they are read from the internal non-volatile memory and loaded into work registers. These forms of conventional probing require direct access to the top or front sides of the IC while it is powered.

Direct viewing of the non-volatile memory

If the chip were sliced so that the floating gates of the Flash memory were exposed, without discharging them, then the key could probably be viewed directly using an STM or SKM (Scanning Kelvin Microscope). However, slicing the chip to this level without discharging the gates is probably impossible. Using wet etching, plasma etching, ion milling

(focused ion beam etching), or chemical mechanical polishing will almost certainly discharge the small charges present on the floating gates.

Viewing the light bursts caused by state changes

Whenever a gate changes state, a small amount of infrared energy is emitted. Since silicon is transparent to infrared, these changes can be observed by looking at the circuitry from the underside of a chip. While the emission process is weak, it is bright enough to be detected by highly sensitive equipment developed for use in astronomy. The technique, developed by IBM, is called PICA (Picosecond Imaging Circuit Analyzer). If the state of a register is known at time t, then watching that register change over time will reveal the exact value at time t+n, and if the data is part of the key, then that part is compromised.

Monitoring EMI

Whenever electronic circuitry operates, faint electromagnetic signals are given off. Relatively inexpensive equipment (a few thousand dollars) can monitor these signals. This could give enough information to allow an attacker to deduce the keys.

Viewing I_{dd} fluctuations

Even if keys cannot be viewed, there is a fluctuation in current whenever registers change state. If there is a high enough signal to noise ratio, an attacker can monitor the difference in I_{dd} that may occur when programming over either a high or a low bit. The change in I_{dd} can reveal information about the key. Attacks such as these have already been used to break smart cards.

Differential Fault Analysis

This attack assumes introduction of a bit error by ionization, microwave radiation, or environmental stress. In most cases such an error is more likely to adversely affect the Chip (eg cause the program code to crash) rather than cause beneficial changes which would reveal the key. Targeted faults such as ROM overwrite, gate destruction etc are far more likely to produce useful results.

Clock glitch attacks

Chips are typically designed to properly operate within a certain clock speed range. Some attackers attempt to introduce faults in logic by running the chip at extremely high clock speeds or introduce a clock glitch at a particular time for a particular duration. The idea is to create race conditions where the circuitry does not function properly. An example could be an AND gate that (because of race conditions) gates through $Input_1$ all the time instead of the AND of $Input_1$ and $Input_2$. If an attacker knows the internal structure of the chip, they can attempt to introduce race conditions at the correct moment in the algorithm execution, thereby revealing information about the key (or in the worst case, the key itself).

Power supply attacks

Instead of creating a glitch in the clock signal, attackers can also produce glitches in the power supply where the power is increased or decreased to be outside the working operating voltage range. The net effect is the same as a clock glitch – introduction of error in the execution of a particular instruction. The idea is to stop the CPU from XORing the key, or from shifting the data one bit-position etc. Specific instructions are targeted so that information about the key is revealed.

Overwriting ROM

Single bits in a ROM can be overwritten using a laser cutter microscope, to either 1 or 0 depending on the sense of the

logic. With a given opcode/operand set, it may be a simple matter for an attacker to change a conditional jump to a non-conditional jump, or perhaps change the destination of a register transfer. If the target instruction is chosen carefully, it may result in the key being revealed.

Modifying EEPROM/Flash

EEPROM/Flash attacks are similar to ROM attacks except that the laser cutter microscope technique can be used to both set and reset individual bits. This gives much greater scope in terms of modification of algorithms.

Gate Destruction

Anderson and Kuhn described the rump session of the 1997 workshop on Fast Software Encryption, where Biham and Shamir presented an attack on DES. The attack was to use a laser cutter to destroy an individual gate in the hardware implementation of a known block cipher (DES). The net effect of the attack was to force a particular bit of a register to be "stuck". Biham and Shamir described the effect of forcing a particular register to be affected in this way – the least significant bit of the output from the round function is set to 0. Comparing the 6 least significant bits of the left half and the right half can recover several bits of the key. Damaging a number of chips in this way can reveal enough information about the key to make complete key recovery easy. An encryption chip modified in this way will have the property that encryption and decryption will no longer be inverses.

Overwrite Attacks

Instead of trying to read the Flash memory, an attacker may simply set a single bit by use of a laser cutter microscope. Although the attacker doesn't know the previous value, they know the new value. If the chip still works, the bit's original state must be the same as the new state. If the chip doesn't work any longer, the bit's original state must be the logical NOT of the current state. An attacker can perform this attack on each bit of the key and obtain the n-bit key using at most n chips (if the new bit matched the old bit, a new chip is not required for determining the next bit).

Test Circuitry Attack

Most chips contain test circuitry specifically designed to check for manufacturing defects. This includes BIST (Built In Self Test) and scan paths. Quite often the scan paths and test circuitry includes access and readout mechanisms for all the embedded latches. In some cases the test circuitry could potentially be used to give information about the contents of particular registers. Test circuitry is often disabled once the chip has passed all manufacturing tests, in some cases by blowing a specific connection within the chip. A determined attacker, however, can reconnect the test circuitry and hence enable it.

Memory Remanence

Values remain in RAM long after the power has been removed, although they do not remain long enough to be considered non-volatile. An attacker can remove power once sensitive information has been moved into RAM (for example working registers), and then attempt to read the value from RAM. This attack is most useful against security systems that have regular RAM chips. A classic example is where a security system was designed with an automatic power-shut-off that is triggered when the computer case is opened. The attacker was able to simply open the case, remove the RAM chips, and retrieve the key because of memory remanence.

Chip Theft Attack

If there are a number of stages in the lifetime of an Authentication Chip, each of these stages must be examined in terms of ramifications for security should chips be stolen. For example, if information is programmed into the chip in stages, theft of a chip between stages may allow an attacker to have access to key information or reduced efforts for

attack. Similarly, if a chip is stolen directly after manufacture but before programming, does it give an attacker any logical or physical advantage?

Requirements

Existing solutions to the problem of authenticating consumables have typically relied on physical patents on packaging. However this does not stop home refill operations or clone manufacture in countries with weak industrial property protection. Consequently a much higher level of protection is required. The authentication mechanism is therefore built into an Authentication chip 53 that allows a system to authenticate a consumable securely and easily. Limiting ourselves to the system authenticating consumables (we don't consider the consumable authenticating the system), two levels of protection can be considered:

Presence Only Authentication

This is where only the presence of an Authentication Chip is tested. The Authentication Chip can be reused in another consumable without being reprogrammed.

Consumable Lifetime Authentication

This is where not only is the presence of the Authentication Chip tested for, but also the Authentication chip 53 must only last the lifetime of the consumable. For the chip to be reused it must be completely erased and reprogrammed. The two levels of protection address different requirements. We are primarily concerned with Consumable Lifetime Authentication in order to prevent cloned versions of high volume consumables. In this case, each chip should hold secure state information about the consumable being authenticated. It should be noted that a Consumable Lifetime Authentication Chip could be used in any situation requiring a Presence Only Authentication Chip. The requirements for authentication, data storage integrity and manufacture should be considered separately. The following sections summarize requirements of each.

Authentication

The authentication requirements for both Presence Only Authentication and Consumable Lifetime Authentication are restricted to case of a system authenticating a consumable. For Presence Only Authentication, we must be assured that an Authentication Chip is physically present. For Consumable Lifetime Authentication we also need to be assured that state data actually came from the Authentication Chip, and that it has not been altered en route. These issues cannot be separated – data that has been altered has a new source, and if the source cannot be determined, the question of alteration cannot be settled. It is not enough to provide an authentication method that is secret, relying on a home-brew security method that has not been scrutinized by security experts. The primary requirement therefore is to provide authentication by means that have withstood the scrutiny of experts. The authentication scheme used by the Authentication chip 53 should be resistant to defeat by logical means. Logical types of attack are extensive, and attempt to do one of three things:

Bypass the authentication process altogether

Obtain the secret key by force or deduction, so that any question can be answered

Find enough about the nature of the authenticating questions and answers in order to, without the key, give the right answer to each question.

Data Storage Integrity

Although Authentication protocols take care of ensuring data integrity in communicated messages, data storage integrity is also required. Two kinds of data must be stored within the Authentication Chip:

Authentication data, such as secret keys

Consumable state data, such as serial numbers, and media remaining etc.

The access requirements of these two data types differ greatly. The Authentication chip 53 therefore requires a storage/access control mechanism that allows for the integrity requirements of each type.

Authentication Data

Authentication data must remain confidential. It needs to be stored in the chip during a manufacturing/programming stage of the chip's life, but from then on must not be permitted to leave the chip. It must be resistant to being read from non-volatile memory. The authentication scheme is responsible for ensuring the key cannot be obtained by deduction, and the manufacturing process is responsible for ensuring that the key cannot be obtained by physical means. The size of the authentication data memory area must be large enough to hold the necessary keys and secret information as mandated by the authentication protocols.

Consumable State Data

Each Authentication chip 53 needs to be able to also store 256 bits (32 bytes) of consumable state data. Consumable state data can be divided into the following types. Depending on the application, there will be different numbers of each of these types of data items. A maximum number of 32 bits for a single data item is to be considered.

Read Only

ReadWrite

Decrement Only

Read Only data needs to be stored in the chip during a manufacturing/programming stage of the chip's life, but from then on should not be allowed to change. Examples of Read Only data items are consumable batch numbers and serial numbers.

ReadWrite data is changeable state information, for example, the last time the particular consumable was used. ReadWrite data items can be read and written an unlimited number of times during the lifetime of the consumable. They can be used to store any state information about the consumable. The only requirement for this data is that it needs to be kept in non-volatile memory. Since an attacker can obtain access to a system (which can write to ReadWrite data), any attacker can potentially change data fields of this type. This data type should not be used for secret information, and must be considered insecure.

Decrement Only data is used to count down the availability of consumable resources. A photocopier's toner cartridge, for example, may store the amount of toner remaining as a Decrement Only data item. An ink cartridge for a color printer may store the amount of each ink color as a Decrement Only data item, requiring 3 (one for each of Cyan, Magenta, and Yellow), or even as many as 5 or 6 Decrement Only data items. The requirement for this kind of data item is that once programmed with an initial value at the manufacturing/programming stage, it can only reduce in value. Once it reaches the minimum value, it cannot decrement any further. The Decrement Only data item is only required by Consumable Lifetime Authentication.

Manufacture

The Authentication chip 53 ideally must have a low manufacturing cost in order to be included as the authentication mechanism for low cost consumables. The Authentication chip 53 should use a standard manufacturing process, such as Flash. This is necessary to:

Allow a great range of manufacturing location options

Use well-defined and well-behaved technology

Reduce cost

Regardless of the authentication scheme used, the circuitry of the authentication part of the chip must be resistant to physical attack. Physical attack comes in four main ways, although the form of the attack can vary:

Bypassing the Authentication Chip altogether

Physical examination of chip while in operation (destructive and non-destructive)

Physical decomposition of chip

Physical alteration of chip

Ideally, the chip should be exportable from the U.S., so it should not be possible to use an Authentication chip 53 as a secure encryption device. This is low priority requirement since there are many companies in other countries able to manufacture the Authentication chips. In any case, the export restrictions from the U.S. may change.

Authentication

Existing solutions to the problem of authenticating consumables have typically relied on physical patents on packaging. However this does not stop home refill operations or clone manufacture in countries with weak industrial property protection. Consequently a much higher level of protection is required. It is not enough to provide an authentication method that is secret, relying on a home-brew security method that has not been scrutinized by security experts. Security systems such as Netscape's original proprietary system and the GSM Fraud Prevention Network used by cellular phones are examples where design secrecy caused the vulnerability of the security. Both security systems were broken by conventional means that would have been detected if the companies had followed an open design process. The solution is to provide authentication by means that have withstood the scrutiny of experts. A number of protocols that can be used for consumables authentication. We only use security methods that are publicly described, using known behaviors in this new way. For all protocols, the security of the scheme relies on a secret key, not a secret algorithm. All the protocols rely on a time-variant challenge (i.e. the challenge is different each time), where the response depends on the challenge and the secret. The challenge involves a random number so that any observer will not be able to gather useful information about a subsequent identification. Two protocols are presented for each of Presence Only Authentication and Consumable Lifetime Authentication. Although the protocols differ in the number of Authentication Chips required for the authentication process, in all cases the System authenticates the consumable. Certain protocols will work with either one or two chips, while other protocols only work with two chips. Whether one chip or two Authentication Chips are used the System is still responsible for making the authentication decision.

Single Chip Authentication

When only one Authentication chip 53 is used for the authentication protocol, a single chip (referred to as **ChipA**) is responsible for proving to a system (referred to as **System**) that it is authentic. At the start of the protocol, System is unsure of ChipA's authenticity. System undertakes a challenge-response protocol with ChipA, and thus determines ChipA's authenticity. In all protocols the authenticity of the consumable is directly based on the authenticity of the chip, i.e. if ChipA is considered authentic, then the consumable is considered authentic. The data flow can be seen in Fig. 167. In single chip authentication protocols, System can be software, hardware or a combination of both. It is important to note that System is considered insecure – it can be easily reverse engineered by an attacker, either by examining the ROM or by examining circuitry. System is not specially engineered to be secure in itself.

Double Chip Authentication

In other protocols, two Authentication Chips are required as shown in Fig. 168. A single chip (referred to as **ChipA**) is responsible for proving to a system (referred to as **System**) that it is authentic. As part of the authentication process, System makes use of a trusted Authentication Chip (referred to as **ChipT**). In double chip authentication protocols, System can be software, hardware or a combination of both. However ChipT must be a physical Authentication Chip. In some protocols ChipT and ChipA have the same internal structure, while in others ChipT and ChipA have different internal structures.

Presence Only Authentication (Insecure State Data)

For this level of consumable authentication we are only concerned about validating the presence of the Authentication chip 53. Although the Authentication Chip can contain state information, the transmission of that state information would not be considered secure. Two protocols are presented. Protocol 1 requires 2 Authentication Chips, while Protocol 2 can be implemented using either 1 or 2 Authentication Chips.

Protocol 1

Protocol 1 is a double chip protocol (two Authentication Chips are required). Each Authentication Chip contains the following values:

K Key for $F_K[X]$. Must be secret.

R Current random number. Does not have to be secret, but must be seeded with a different initial value for each chip instance. Changes with each invocation of the Random function.

Each Authentication Chip contains the following logical functions:

Random[] Returns R, and advances R to next in sequence.

F[X] Returns $F_K[X]$, the result of applying a one-way function F to X based upon the secret key K.

The protocol is as follows:

System requests Random[] from ChipT;

ChipT returns R to System;

System requests F[R] from both ChipT and ChipA;

ChipT returns $F_{KT}[R]$ to System;

ChipA returns $F_{KA}[R]$ to System;

System compares $F_{KT}[R]$ with $F_{KA}[R]$. If they are equal, then ChipA is considered valid. If not, then ChipA is considered invalid.

The data flow can be seen in Fig. 169. The System does not have to comprehend $F_K[R]$ messages. It must merely check that the responses from ChipA and ChipT are the same. The System therefore does not require the key. The security of Protocol 1 lies in two places:

The security of F[X]. Only Authentication chips contain the secret key, so anything that can produce an F[X] from an X that matches the F[X] generated by a trusted Authentication chip 53 (ChipT) must be authentic.

The domain of R generated by all Authentication chips must be large and non-deterministic. If the domain of R generated by all Authentication chips is small, then there is no need for a clone manufacturer to crack the key. Instead, the clone manufacturer could incorporate a ROM in their chip that had a record of all of the responses from a genuine chip to the codes sent by the system. The Random function does not strictly have to be in the Authentication Chip, since System can potentially generate the same random number sequence.

However it simplifies the design of System and ensures the security of the random number generator will be the same for all implementations that use the Authentication Chip, reducing possible error in system implementation.

Protocol 1 has several advantages:

K is not revealed during the authentication process

Given X, a clone chip cannot generate $F_K[X]$ without K or access to a real Authentication Chip.

System is easy to design, especially in low cost systems such as ink-jet printers, as no encryption or decryption is required by System itself.

A wide range of keyed one-way functions exists, including symmetric cryptography, random number sequences, and message authentication codes.

One-way functions require fewer gates and are easier to verify than asymmetric algorithms).

Secure key size for a keyed one-way function does not have to be as large as for an asymmetric (public key) algorithm. A minimum of 128 bits can provide appropriate security if F[X] is a symmetric cryptographic function.

However there are problems with this protocol:

It is susceptible to chosen text attack. An attacker can plug the chip into their own system, generate chosen Rs, and observe the output. In order to find the key, an attacker can also search for an R that will generate a specific F[M] since multiple Authentication chips can be tested in parallel.

Depending on the one-way function chosen, key generation can be complicated. The method of selecting a good key depends on the algorithm being used. Certain keys are weak for a given algorithm.

The choice of the keyed one-way functions itself is non-trivial. Some require licensing due to patent protection.

A man-in-the middle could take action on a plaintext message M before passing it on to ChipA – it would be preferable if the man-in-the-middle did not see M until after ChipA had seen it. It would be even more preferable if a man-in-the-middle didn't see M at all.

If F is symmetric encryption, because of the key size needed for adequate security, the chips could not be exported from the USA since they could be used as strong encryption devices.

If Protocol 1 is implemented with F as an asymmetric encryption algorithm, there is no advantage over the symmetric case – the keys needs to be longer and the encryption algorithm is more expensive in silicon. Protocol 1 must be implemented with 2 Authentication Chips in order to keep the key secure. This means that each System requires an Authentication Chip and each consumable requires an Authentication Chip.

Protocol 2

In some cases, System may contain a large amount of processing power. Alternatively, for instances of systems that are manufactured in large quantities, integration of ChipT into System may be desirable. Use of an asymmetrical encryption algorithm allows the ChipT portion of System to be insecure. Protocol 2 therefore, uses asymmetric cryptography. For this protocol, each chip contains the following values:

K Key for $E_K[X]$ and $D_K[X]$. Must be secret in ChipA. Does not have to be secret in ChipT.

R Current random number. Does not have to be secret, but must be seeded with a different initial value for each chip instance. Changes with each invocation of the Random function.

The following functions are defined:

E[X] ChipT only. Returns $E_K[X]$ where E is asymmetric encrypt function E.

D[X] ChipA only. Returns $D_K[X]$ where D is asymmetric decrypt function D.

Random[] ChipT only. Returns R | $E_K[R]$, where R is random number based on seed S. Advances R to next in random number sequence.

The public key K_T is in ChipT, while the secret key K_A is in ChipA. Having K_T in ChipT has the advantage that ChipT can be implemented in software or hardware (with the proviso that the seed for R is different for each chip or system). Protocol 2 therefore can be implemented as a Single Chip Protocol or as a Double Chip Protocol. The protocol for authentication is as follows:

System calls ChipT's Random function;

ChipT returns R | $E_{KT}[R]$ to System;

System calls ChipA's D function, passing in $E_{KT}[R]$;

ChipA returns R, obtained by $D_{KA}[E_{KT}[R]]$;

System compares R from ChipA to the original R generated by ChipT. If they are equal, then ChipA is considered valid. If not, ChipA is invalid.

The data flow can be seen in Fig. 170. Protocol 2 has the following advantages:

K_A (the secret key) is not revealed during the authentication process

Given $E_{KT}[X]$, a clone chip cannot generate X without K_A or access to a real ChipA.

Since $K_T \neq K_A$, ChipT can be implemented completely in software or in insecure hardware or as part of System. Only ChipA (in the consumable) is required to be a secure Authentication Chip.

If ChipT is a physical chip, System is easy to design.

There are a number of well-documented and cryptanalyzed asymmetric algorithms to chose from for implementation, including patent-free and license-free solutions.

However, Protocol 2 has a number of its own problems:

For satisfactory security, each key needs to be 2048 bits (compared to minimum 128 bits for symmetric cryptography in Protocol 1). The associated intermediate memory used by the encryption and decryption algorithms is correspondingly larger.

Key generation is non-trivial. Random numbers are not good keys.

If ChipT is implemented as a core, there may be difficulties in linking it into a given System ASIC.

If ChipT is implemented as software, not only is the implementation of System open to programming error and non-rigorous testing, but the integrity of the compiler and mathematics primitives must be rigorously checked for each implementation of System. This is more complicated and costly than simply using a well-tested chip.

Although many symmetric algorithms are specifically strengthened to be resistant to differential cryptanalysis (which is based on chosen text attacks), the private key K_A is susceptible to a chosen text attack

If ChipA and ChipT are instances of the same Authentication Chip, each chip must contain both asymmetric encrypt and decrypt functionality. Consequently each chip is larger, more complex, and more expensive than the chip required for Protocol 1.

If the Authentication Chip is broken into 2 chips to save cost and reduce complexity of design/test, two chips still need to be manufactured, reducing the economies of scale. This is offset by the relative numbers of systems to consumables, but must still be taken into account.

Protocol 2 Authentication Chips could not be exported from the USA, since they would be considered strong encryption devices.

Even if the process of choosing a key for Protocol 2 was straightforward, Protocol 2 is impractical at the present time due to the high cost of silicon implementation (both key size and functional implementation). Therefore Protocol 1 is the protocol of choice for Presence Only Authentication.

Clone Consumable using Real Authentication Chip

Protocols 1 and 2 only check that ChipA is a real Authentication Chip. They do not check to see if the consumable itself is valid. The fundamental assumption for authentication is that if ChipA is valid, the consumable is valid. It is therefore possible for a clone manufacturer to insert a real Authentication Chip into a clone consumable. There are two cases to consider:

In cases where state data is not written to the Authentication Chip, the chip is completely reusable. Clone manufacturers could therefore recycle a valid consumable into a clone consumable. This may be made more difficult by melding the Authentication Chip into the consumable's physical packaging, but it would not stop refill operators.

In cases where state data is written to the Authentication Chip, the chip may be new, partially used up, or completely used up. However this does not stop a clone manufacturer from using the Piggyback attack, where the clone manufacturer builds a chip that has a real Authentication Chip as a piggyback. The Attacker's chip (ChipE) is therefore a man-in-the-middle. At power up, ChipE reads all the memory state values from the real Authentication chip 53 into its own memory. ChipE then examines requests from System, and takes different actions depending on the request. Authentication requests can be passed directly to the real Authentication chip 53, while read/write requests can be simulated by a memory that resembles real Authentication Chip behavior. In this way the Authentication chip 53 will always appear fresh at power-up. ChipE can do this because the data access is not authenticated.

In order to fool System into thinking its data accesses were successful, ChipE still requires a real Authentication Chip, and in the second case, a clone chip is required in addition to a real Authentication Chip. Consequently Protocols 1 and 2 can be useful in situations where it is not cost effective for a clone manufacturer to embed a real Authentication chip 53 into the consumable. If the consumable cannot be recycled or refilled easily, it may be protection enough to use Protocols 1 or 2. For a clone operation to be successful each clone consumable must include a valid Authentication Chip. The chips would have to be stolen en masse, or taken from old consumables. The quantity of these reclaimed chips (as well as the effort in reclaiming them) should not be enough to base a business on, so the added protection of secure data transfer (see Protocols 3 and 4) may not be useful.

Longevity of Key

A general problem of these two protocols is that once the authentication key is chosen, it cannot easily be changed. In some instances a key-compromise is not a problem, while for others a key compromise is disastrous. For example, in a car/car-key System/Consumable scenario, the customer has only one set of car/car-keys. Each car has a different authentication key. Consequently the loss of a car-key only compromises the individual car. If the owner considers this a problem, they must get a new lock on the car by replacing the System chip inside the car's electronics. The owner's keys must be reprogrammed/replaced to work with the new car System Authentication Chip. By contrast, a compromise of a key for a high volume consumable market (for example ink cartridges in printers) would allow a

clone ink cartridge manufacturer to make their own Authentication Chips. The only solution for existing systems is to update the System Authentication Chips, which is a costly and logistically difficult exercise. In any case, consumers' Systems already work - they have no incentive to hobble their existing equipment.

Consumable Lifetime Authentication

In this level of consumable authentication we are concerned with validating the existence of the Authentication Chip, as well as ensuring that the Authentication Chip lasts only as long as the consumable. In addition to validating that an Authentication Chip is present, writes and reads of the Authentication Chip's memory space must be authenticated as well. In this section we assume that the Authentication Chip's data storage integrity is secure – certain parts of memory are Read Only, others are Read/Write, while others are Decrement Only (see the chapter entitled **Data Storage Integrity** for more information). Two protocols are presented. Protocol 3 requires 2 Authentication Chips, while Protocol 4 can be implemented using either 1 or 2 Authentication Chips.

Protocol 3

This protocol is a double chip protocol (two Authentication Chips are required). For this protocol, each Authentication Chip contains the following values:

- K_1 Key for calculating $F_{K1}[X]$. Must be secret.
- K_2 Key for calculating $F_{K2}[X]$. Must be secret.
- R Current random number. Does not have to be secret, but must be seeded with a different initial value for each chip instance. Changes with each successful authentication as defined by the Test function.
- M Memory vector of Authentication chip 53. Part of this space should be different for each chip (does not have to be a random number).

Each Authentication Chip contains the following logical functions:

- **F[X]** Internal function only. Returns $F_K[X]$, the result of applying a one-way function F to X based upon either key K_1 or key K_2
- **Random[]** Returns $R \mid F_{K1}[R]$.
- **Test[X, Y]** Returns 1and advances R if $F_{K2}[R \mid X] = Y$. Otherwise returns 0. The time taken to return 0 must be identical for all bad inputs.
- **Read[X, Y]** Returns $M \mid F_{K2}[X \mid M]$ if $F_{K1}[X] = Y$. Otherwise returns 0. The time taken to return 0 must be identical for all bad inputs.
- **Write[X]** Writes X over those parts of M that can legitimately be written over.

To authenticate ChipA and read ChipA's memory M:

System calls ChipT's Random function;

ChipT produces $R \mid F_K[R]$ and returns these to System;

System calls ChipA's Read function, passing in R, $F_K[R]$;

ChipA returns M and $F_K[R \mid M]$;

System calls ChipT's Test function, passing in M and $F_K[R \mid M]$;

System checks response from ChipT. If the response is 1, then ChipA is considered authentic. If 0, ChipA is considered invalid.

To authenticate a write of M_{new} to ChipA's memory M:

System calls ChipA's Write function, passing in M_{new};

The authentication procedure for a Read is carried out;

If ChipA is authentic and $M_{new} = M$, the write succeeded. Otherwise it failed.

The data flow for read authentication is shown in Fig. 171. The first thing to note about Protocol 3 is that $F_K[X]$ cannot be called directly. Instead $F_K[X]$ is called indirectly by Random, Test and Read:

Random[] calls $F_{K1}[X]$ X is not chosen by the caller. It is chosen by the Random function. An attacker must perform a brute force search using multiple calls to Random, Read, and Test to obtain a desired X, $F_{K1}[X]$ pair.

Test[X,Y] calls $F_{K2}[R \mid X]$ Does not return result directly, but compares the result to Y and then returns 1 or 0. Any attempt to deduce K_2 by calling Test multiple times trying different values of $F_{K2}[R \mid X]$ for a given X is reduced to a brute force search where R cannot even be chosen by the attacker.

Read[X, Y] calls $F_{K1}[X]$ X and $F_{K1}[X]$ must be supplied by caller, so the caller must already know the X, $F_{K1}[X]$ pair. Since the call returns 0 if $Y \neq F_{K1}[X]$, a caller can use the Read function for a brute force attack on K_1.

Read[X, Y] calls $F_{K2}[X \mid M]$, X is supplied by caller, however X can only be those values already given out by the Random function (since X and Y are validated via K_1). Thus a chosen text attack must first collect pairs from Random (effectively a brute force attack). In addition, only part of M can be used in a chosen text attack since some of M is constant (read-only) and the decrement-only part of M can only be used once per consumable. In the next consumable the read-only part of M will be different.

Having $F_K[X]$ being called indirectly prevents chosen text attacks on the Authentication Chip. Since an attacker can only obtain a chosen R, $F_{K1}[R]$ pair by calling Random, Read, and Test multiple times until the desired R appears, a brute force attack on K_1 is required in order to perform a limited chosen text attack on K_2. Any attempt at a chosen text attack on K_2 would be limited since the text cannot be completely chosen: parts of M are read-only, yet different for each Authentication Chip. The second thing to note is that two keys are used. Given the small size of M, two different keys K_1 and K_2 are used in order to ensure there is no correlation between F[R] and F[R|M]. K_1 is therefore used to help protect K_2 against differential attacks. It is not enough to use a single longer key since M is only 256 bits, and only part of M changes during the lifetime of the consumable. Otherwise it is potentially possible that an attacker via some as-yet undiscovered technique, could determine the effect of the limited changes in M to particular bit combinations in R and thus calculate $F_{K2}[X \mid M]$ based on $F_{K1}[X]$. As an added precaution, the Random and Test functions in ChipA should be disabled so that in order to generate R, $F_K[R]$ pairs, an attacker must use instances of ChipT, each of which is more expensive than ChipA (since a system must be obtained for each ChipT). Similarly, there should be a minimum delay between calls to Random, Read and Test so that an attacker cannot call these functions at high speed. Thus each chip can only give a specific number of X, $F_K[X]$ pairs away in a certain time period. The only specific timing requirement of Protocol 3 is that the return value of 0 (indicating a bad input) must be produced in the same amount of time regardless of where the error is in the input. Attackers can therefore not learn anything about what was bad about the input value. This is true for both RD and TST functions.

Another thing to note about Protocol 3 is that Reading data from ChipA also requires authentication of ChipA. The System can be sure that the contents of memory (M) is what ChipA claims it to be if $F_{K2}[R \mid M]$ is returned correctly. A clone chip may pretend that M is a certain value (for example it may pretend that the consumable is full), but it cannot return $F_{K2}[R \mid M]$ for any R passed in by System. Thus the effective signature $F_{K2}[R \mid M]$ assures System that not only

did an authentic ChipA send M, but also that M was not altered in between ChipA and System. Finally, the Write function as defined does not authenticate the Write. To authenticate a write, the System must perform a Read after each Write. There are some basic advantages with Protocol 3:

K_1 and K_2 are not revealed during the authentication process

Given X, a clone chip cannot generate $F_{K2}[X \mid M]$ without the key or access to a real Authentication Chip.

System is easy to design, especially in low cost systems such as ink-jet printers, as no encryption or decryption is required by System itself.

A wide range of key based one-way functions exists, including symmetric cryptography, random number sequences, and message authentication codes.

Keyed one-way functions require fewer gates and are easier to verify than asymmetric algorithms).

Secure key size for a keyed one-way function does not have to be as large as for an asymmetric (public key) algorithm. A minimum of 128 bits can provide appropriate security if F[X] is a symmetric cryptographic function.

Consequently, with Protocol 3, the only way to authenticate ChipA is to read the contents of ChipA's memory. The security of this protocol depends on the underlying $F_K[X]$ scheme and the domain of R over the set of all Systems. Although $F_K[X]$ can be any keyed one-way function, there is no advantage to implement it as asymmetric encryption. The keys need to be longer and the encryption algorithm is more expensive in silicon. This leads to a second protocol for use with asymmetric algorithms – Protocol 4. Protocol 3 must be implemented with 2 Authentication Chips in order to keep the keys secure. This means that each System requires an Authentication Chip and each consumable requires an Authentication Chip

<u>Protocol 4</u>

In some cases, System may contain a large amount of processing power. Alternatively, for instances of systems that are manufactured in large quantities, integration of ChipT into System may be desirable. Use of an asymmetrical encryption algorithm can allow the ChipT portion of System to be insecure. Protocol 4 therefore, uses asymmetric cryptography. For this protocol, each chip contains the following values:

K Key for $E_K[X]$ and $D_K[X]$. Must be secret in ChipA. Does not have to be secret in ChipT.

R Current random number. Does not have to be secret, but must be seeded with a different initial value for each chip instance. Changes with each successful authentication as defined by the Test function.

M Memory vector of Authentication chip 53. Part of this space should be different for each chip, (does not have to be a random number).

There is no point in verifying anything in the Read function, since anyone can encrypt using a public key. Consequently the following functions are defined:

E[X] Internal function only. Returns $E_K[X]$ where E is asymmetric encrypt function E.

D[X] Internal function only. Returns $D_K[X]$ where D is asymmetric decrypt function D.

Random[] ChipT only. Returns $E_K[R]$.

Test[X, Y] Returns 1 and advances R if $D_K[R \mid X] = Y$. Otherwise returns 0. The time taken to return 0 must be identical for all bad inputs.

Read[X] Returns $M \mid E_K[R \mid M]$ where $R = D_K[X]$ (does not test input).

Write[X] Writes X over those parts of M that can legitimately be written over.

The public key K_T is in ChipT, while the secret key K_A is in ChipA. Having K_T in ChipT has the advantage that ChipT can be implemented in software or hardware (with the proviso that R is seeded with a different random number for each system). To authenticate ChipA and read ChipA's memory M:

System calls ChipT's Random function;

ChipT produces ad returns $E_{KT}[R]$ to System;

System calls ChipA's Read function, passing in $E_{KT}[R]$;

ChipA returns $M \mid E_{KA}[R \mid M]$, first obtaining R by $D_{KA}[E_{KT}[R]]$;

System calls ChipT's Test function, passing in M and $E_{KA}[R \mid M]$;

ChipT calculates $D_{KT}[E_{KA}[R \mid M]]$ and compares it to $R \mid M$.

System checks response from ChipT. If the response is 1, then ChipA is considered authentic. If 0, ChipA is considered invalid.

To authenticate a write of M_{new} to ChipA's memory M:

System calls ChipA's Write function, passing in M_{new};

The authentication procedure for a Read is carried out;

If ChipA is authentic and $M_{new} = M$, the write succeeded. Otherwise it failed.

The data flow for read authentication is shown in Fig. 172. Only a valid ChipA would know the value of R, since R is not passed into the Authenticate function (it is passed in as an encrypted value). R must be obtained by decrypting E[R], which can only be done using the secret key K_A. Once obtained, R must be appended to M and then the result re-encoded. ChipT can then verify that the decoded form of $E_{KA}[R \mid M] = R \mid M$ and hence ChipA is valid. Since $K_T \neq K_A$, $E_{KT}[R] \neq E_{KA}[R]$. Protocol 4 has the following advantages:

K_A (the secret key) is not revealed during the authentication process

Given $E_{KT}[X]$, a clone chip cannot generate X without K_A or access to a real ChipA.

Since $K_T \neq K_A$, ChipT can be implemented completely in software or in insecure hardware or as part of System. Only ChipA is required to be a secure Authentication Chip.

Since ChipT and ChipA contain different keys, intense testing of ChipT will reveal nothing about K_A.

If ChipT is a physical chip, System is easy to design.

There are a number of well-documented and cryptanalyzed asymmetric algorithms to chose from for implementation, including patent-free and license-free solutions.

Even if System could be rewired so that ChipA requests were directed to ChipT, ChipT could never answer for ChipA since $K_T \neq K_A$. The attack would have to be directed at the System ROM itself to bypass the Authentication protocol.

However, Protocol 4 has a number of disadvantages:

All Authentication Chips need to contain both asymmetric encrypt and decrypt functionality. Consequently each chip is larger, more complex, and more expensive than the chip required for Protocol 3.

For satisfactory security, each key needs to be 2048 bits (compared to a minimum of 128 bits for symmetric cryptography in Protocol 1). The associated intermediate memory used by the encryption and decryption algorithms is correspondingly larger.

Key generation is non-trivial. Random numbers are not good keys.

If ChipT is implemented as a core, there may be difficulties in linking it into a given System ASIC.

If ChipT is implemented as software, not only is the implementation of System open to programming error and non-rigorous testing, but the integrity of the compiler and mathematics primitives must be rigorously checked for each implementation of System. This is more complicated and costly than simply using a well-tested chip.

Although many symmetric algorithms are specifically strengthened to be resistant to differential cryptanalysis (which is based on chosen text attacks), the private key K_A is susceptible to a chosen text attack

Protocol 4 Authentication Chips could not be exported from the USA, since they would be considered strong encryption devices.

As with Protocol 3, the only specific timing requirement of Protocol 4 is that the return value of 0 (indicating a bad input) must be produced in the same amount of time regardless of where the error is in the input. Attackers can therefore not learn anything about what was bad about the input value. This is true for both RD and TST functions.

Variation on call to TST

If there are two Authentication Chips used, it is theoretically possible for a clone manufacturer to replace the System Authentication Chip with one that returns 1 (success) for each call to TST. The System can test for this by calling TST a number of times – N times with a wrong hash value, and expect the result to be 0. The final time that TST is called, the true returned value from ChipA is passed, and the return value is trusted. The question then arises of how many times to call TST. The number of calls must be random, so that a clone chip manufacturer cannot know the number ahead of time. If System has a clock, bits from the clock can be used to determine how many false calls to TST should be made. Otherwise the returned value from ChipA can be used. In the latter case, an attacker could still rewire the System to permit a clone ChipT to view the returned value from ChipA, and thus know which hash value is the correct one. The worst case of course, is that the System can be completely replaced by a clone System that does not require authenticated consumables – this is the limit case of rewiring and changing the System. For this reason, the variation on calls to TST is optional, depending on the System, the Consumable, and how likely modifications are to be made. Adding such logic to System (for example in the case of a small desktop printer) may be considered not worthwhile, as the System is made more complicated. By contrast, adding such logic to a camera may be considered worthwhile.

Clone Consumable using Real Authentication Chip

It is important to decrement the amount of consumable remaining before use that consumable portion. If the consumable is used first, a clone consumable could fake a loss of contact during a write to the special known address and then appear as a fresh new consumable. It is important to note that this attack still requires a real Authentication Chip in each consumable.

Longevity of Key

A general problem of these two protocols is that once the authentication keys are chosen, it cannot easily be changed. In some instances a key-compromise is not a problem, while for others a key compromise is disastrous.

Choosing a protocol

Even if the choice of keys for Protocols 2 and 4 was straightforward, both protocols are impractical at the present time due to the high cost of silicon implementation (both due to key size and functional implementation). Therefore Protocols 1 and 3 are the two protocols of choice. However, Protocols 1 and 3 contain much of the same components:

both require read and write access;

both require implementation of a keyed one-way function; and

both require random number generation functionality.

Protocol 3 requires an additional key (K_2), as well as some minimal state machine changes:

a state machine alteration to enable $F_{K1}[X]$ to be called during Random;

a Test function which calls $F_{K2}[X]$

a state machine alteration to the Read function to call $F_{K1}[X]$ and $F_{K2}[X]$

Protocol 3 only requires minimal changes over Protocol 1. It is more secure and can be used in all places where Presence Only Authentication is required (Protocol 1). It is therefore the protocol of choice. Given that Protocols 1 and 3 both make use of keyed one-way functions, the choice of one-way function is examined in more detail here. The following table outlines the attributes of the applicable choices. The attributes are worded so that the attribute is seen as an advantage.

	Triple DES	Blowfish	RC5	IDEA	Random Sequences	HMAC-MD5	HMAC-SHA1	HMAC-RIPEMD160
Free of patents								
Random key generation								
Can be exported from the USA								
Fast								
Preferred Key Size (bits) for use in this application	168	128	128	128	512	128	160	160
Block size (bits)	64	64	64	64	256	512	512	512
Cryptanalysis Attack-Free (apart from weak keys)								
Output size given input size N	≥N	≥N	≥N	≥N	128	128	160	160
Low storage requirements								
Low silicon complexity								
NSA designed								

An examination of the table shows that the choice is effectively between the 3 HMAC constructs and the Random Sequence. The problem of key size and key generation eliminates the Random Sequence. Given that a number of attacks have already been carried out on MD5 and since the hash result is only 128 bits, HMAC-MD5 is also eliminated. The choice is therefore between HMAC-SHA1 and HMAC-RIPEMD160. RIPEMD-160 is relatively new, and has not been as extensively cryptanalyzed as SHA1. However, SHA-1 was designed by the NSA, so this may be

seen by some as a negative attribute.

Given that there is not much between the two, SHA-1 will be used for the HMAC construct.

Choosing A Random Number Generator

Each of the protocols described (1-4) requires a random number generator. The generator must be "good" in the sense that the random numbers generated over the life of all Systems cannot be predicted. If the random numbers were the same for each System, an attacker could easily record the correct responses from a real Authentication Chip, and place the responses into a ROM lookup for a clone chip. With such an attack there is no need to obtain K_1 or K_2. Therefore the random numbers from each System must be different enough to be unpredictable, or non-deterministic. As such, the initial value for R (the random seed) should be programmed with a physically generated random number gathered from a physically random phenomenon, one where there is no information about whether a particular bit will be 1 or 0. The seed for R must NOT be generated with a computer-run random number generator. Otherwise the generator algorithm and seed may be compromised enabling an attacker to generate and therefore know the set of all R values in all Systems.

Having a different R seed in each Authentication Chip means that the first R will be both random and unpredictable across all chips. The question therefore arises of how to generate subsequent R values in each chip.

The base case is not to change R at all. Consequently R and $F_{K1}[R]$ will be the same for each call to Random[]. If they are the same, then $F_{K1}[R]$ can be a constant rather than calculated. An attacker could then use a single valid Authentication Chip to generate a valid lookup table, and then use that lookup table in a clone chip programmed especially for that System. A constant R is not secure.

The simplest conceptual method of changing R is to increment it by 1. Since R is random to begin with, the values across differing systems are still likely to be random. However given an initial R, all subsequent R values can be determined directly (there is no need to iterate 10,000 times – R will take on values from R_0 to R_0+ 10000). An incrementing R is immune to the earlier attack on a constant R. Since R is always different, there is no way to construct a lookup table for the particular System without wasting as many real Authentication Chips as the clone chip will replace.

Rather than increment using an adder, another way of changing R is to implement it as an LFSR (Linear Feedback Shift Register). This has the advantage of less silicon than an adder, but the advantage of an attacker not being able to directly determine the range of R for a particular System, since an LFSR value-domain is determined by sequential access. To determine which values an given initial R will generate, an attacker must iterate through the possibilities and enumerate them. The advantages of a changing R are also evident in the LFSR solution. Since R is always different, there is no way to construct a lookup table for the particular System without using-up as many real Authentication Chips as the clone chip will replace (and only for that System). There is therefore no advantage in having a more complex function to change R. Regardless of the function, it will always be possible for an attacker to iterate through the lifetime set of values in a simulation. The primary security lies in the initial randomness of R. Using an LFSR to change R (apart from using less silicon than an adder) simply has the advantage of not being restricted to a consecutive numeric range (i.e. knowing R, R_N cannot be directly calculated; an attacker must iterate through the LFSR N times).

The Random number generator within the Authentication Chip is therefore an LFSR with 160 bits. Tap selection of the 160 bits for a maximal-period LFSR (i.e. the LFSR will cycle through all $2^{160}-1$ states, 0 is not a valid state) yields bits 159, 4, 2, and 1, as shown in Fig. 173. The LFSR is sparse, in that not many bits are used for feedback (only 4 out of

160 bits are used). This is a problem for cryptographic applications, but not for this application of non-sequential number generation. The 160-bit seed value for R can be any random number except 0, since an LFSR filled with 0s will produce a never-ending stream of 0s. Since the LFSR described is a maximal period LFSR, all 160 bits can be used directly as R. There is no need to construct a number sequentially from output bits of b_0. After each successful call to TST, the random number (R) must be advanced by XORing bits 1, 2, 4, and 159, and shifting the result into the high order bit. The new R and corresponding $F_{K1}[R]$ can be retrieved on the next call to Random.

Holding out Against Logical Attacks

Protocol 3 is the authentication scheme used by the Authentication Chip. As such, it should be resistant to defeat by logical means. While the effect of various types of attacks on Protocol 3 have been mentioned in discussion, this section details each type of attack in turn with reference to Protocol 3.

Brute Force attack

A Brute Force attack is guaranteed to break Protocol 3. However the length of the key means that the time for an attacker to perform a brute force attack is too long to be worth the effort. An attacker only needs to break K_2 to build a clone Authentication Chip. K_1 is merely present to strengthen K_2 against other forms of attack. A Brute Force Attack on K_2 must therefore break a 160-bit key. An attack against K_2 requires a maximum of 2^{160} attempts, with a 50% chance of finding the key after only 2^{159} attempts. Assuming an array of a trillion processors, each running one million tests per second, 2^{159} (7.3×10^{47}) tests takes 2.3×10^{23} years, which is longer than the lifetime of the universe. There are only 100 million personal computers in the world. Even if these were all connected in an attack (e.g. via the Internet), this number is still 10,000 times smaller than the trillion-processor attack described. Further, if the manufacture of one trillion processors becomes a possibility in the age of nanocomputers, the time taken to obtain the key is longer than the lifetime of the universe.

Guessing the key attack

It is theoretically possible that an attacker can simply "guess the key". In fact, given enough time, and trying every possible number, an attacker will obtain the key. This is identical to the Brute Force attack described above, where 2^{159} attempts must be made before a 50% chance of success is obtained. The chances of someone simply guessing the key on the first try is 2^{160}. For comparison, the chance of someone winning the top prize in a U.S. state lottery and being killed by lightning in the same day is only 1 in 2^{61}. The chance of someone guessing the Authentication Chip key on the first go is 1 in 2^{160}, which is comparative to two people choosing exactly the same atoms from a choice of all the atoms in the Earth i.e. extremely unlikely.

Quantum Computer attack

To break K_2, a quantum computer containing 160 qubits embedded in an appropriate algorithm must be built. An attack against a 160-bit key is not feasible. An outside estimate of the possibility of quantum computers is that 50 qubits may be achievable within 50 years. Even using a 50 qubit quantum computer, 2^{110} tests are required to crack a 160 bit key. Assuming an array of 1 billion 50 qubit quantum computers, each able to try 2^{50} keys in 1 microsecond (beyond the current wildest estimates) finding the key would take an average of 18 billion years.

Cyphertext Only attack

An attacker can launch a Cyphertext Only attack on K_1 by calling monitoring calls to RND and RD, and on K_2 by monitoring calls to RD and TST. However, given that all these calls also reveal the plaintext as well as the hashed form of the plaintext, the attack would be transformed into a stronger form of attack – a Known Plaintext attack.

Known Plaintext attack

It is easy to connect a logic analyzer to the connection between the System and the Authentication Chip, and thereby monitor the flow of data. This flow of data results in known plaintext and the hashed form of the plaintext, which can therefore be used to launch a Known Plaintext attack against both K_1 and K_2. To launch an attack against K_1, multiple calls to RND and TST must be made (with the call to TST being successful, and therefore requiring a call to RD on a valid chip). This is straightforward, requiring the attacker to have both a System Authentication Chip and a Consumable Authentication Chip. For each K_1 X, $H_{K1}[X]$ pair revealed, a K_2 Y, $H_{K2}[Y]$ pair is also revealed. The attacker must collect these pairs for further analysis. The question arises of how many pairs must be collected for a meaningful attack to be launched with this data. An example of an attack that requires collection of data for statistical analysis is Differential Cryptanalysis. However, there are no known attacks against SHA-1 or HMAC-SHA1, so there is no use for the collected data at this time.

Chosen Plaintext attacks

Given that the cryptanalyst has the ability to modify subsequent chosen plaintexts based upon the results of previous experiments, K_2 is open to a partial form of the Adaptive Chosen Plaintext attack, which is certainly a stronger form of attack than a simple Chosen Plaintext attack. A chosen plaintext attack is not possible against K_1, since there is no way for a caller to modify R, which used as input to the RND function (the only function to provide the result of hashing with K_1). Clearing R also has the effect of clearing the keys, so is not useful, and the SSI command calls CLR before storing the new R-value.

Adaptive Chosen plaintext attacks

This kind of attack is not possible against K_1, since K_1 is not susceptible to chosen plaintext attacks. However, a partial form of this attack is possible against K_2, especially since both System and consumables are typically available to the attacker (the System may not be available to the attacker in some instances, such as a specific car). The HMAC construct provides security against all forms of chosen plaintext attacks. This is primarily because the HMAC construct has 2 secret input variables (the result of the original hash, and the secret key). Thus finding collisions in the hash function itself when the input variable is secret is even harder than finding collisions in the plain hash function. This is because the former requires direct access to SHA-1 (not permitted in Protocol 3) in order to generate pairs of input/output from SHA-1. The only values that can be collected by an attacker are HMAC[R] and HMAC[R | M]. These are not attacks against the SHA-1 hash function itself, and reduce the attack to a Differential Cryptanalysis attack, examining statistical differences between collected data. Given that there is no Differential Cryptanalysis attack known against SHA-1 or HMAC, Protocol 3 is resistant to the Adaptive Chosen Plaintext attacks.

Purposeful Error Attack

An attacker can only launch a Purposeful Error Attack on the TST and RD functions, since these are the only functions that validate input against the keys. With both the TST and RD functions, a 0 value is produced if an error is found in the input – no further information is given. In addition, the time taken to produce the 0 result is independent of the input, giving the attacker no information about which bit(s) were wrong. A Purposeful Error Attack is therefore fruitless.

Chaining attack

Any form of chaining attack assumes that the message to be hashed is over several blocks, or the input variables can somehow be set. The HMAC-SHA1 algorithm used by Protocol 3 only ever hashes a single 512-bit block at a time.

Consequently chaining attacks are not possible against Protocol 3.

Birthday attack

The strongest attack known against HMAC is the birthday attack, based on the frequency of collisions for the hash function. However this is totally impractical for minimally reasonable hash functions such as SHA-1. And the birthday attack is only possible when the attacker has control over the message that is signed. Protocol 3 uses hashing as a form of digital signature. The System sends a number that must be incorporated into the response from a valid Authentication Chip. Since the Authentication Chip must respond with H[R | M], but has no control over the input value R, the birthday attack is not possible. This is because the message has effectively already been generated and signed. An attacker must instead search for a collision message that hashes to the same value (analogous to finding one person who shares your birthday). The clone chip must therefore attempt to find a new value R_2 such that the hash of R_2 and a chosen M_2 yields the same hash value as H[R | M]. However the System Authentication Chip does not reveal the correct hash value (the TST function only returns 1 or 0 depending on whether the hash value is correct). Therefore the only way of finding out the correct hash value (in order to find a collision) is to interrogate a real Authentication Chip. But to find the correct value means to update M, and since the decrement-only parts of M are one-way, and the read-only parts of M cannot be changed, a clone consumable would have to update a real consumable before attempting to find a collision. The alternative is a Brute Force attack search on the TST function to find a success (requiring each clone consumable to have access to a System consumable). A Brute Force Search, as described above, takes longer than the lifetime of the universe, in this case, per authentication. Due to the fact that a timely gathering of a hash value implies a real consumable must be decremented, there is no point for a clone consumable to launch this kind of attack.

Substitution with a complete lookup table

The random number seed in each System is 160 bits. The worst case situation for an Authentication Chip is that no state data is changed. Consequently there is a constant value returned as M. However a clone chip must still return $F_{K2}[R | M]$, which is a 160 bit value. Assuming a 160-bit lookup of a 160-bit result, this requires 7.3×10^{48} bytes, or 6.6×10^{36} terabytes, certainly more space than is feasible for the near future. This of course does not even take into account the method of collecting the values for the ROM. A complete lookup table is therefore completely impossible.

Substitution with a sparse lookup table

A sparse lookup table is only feasible if the messages sent to the Authentication Chip are somehow predictable, rather than effectively random. The random number R is seeded with an unknown random number, gathered from a naturally random event. There is no possibility for a clone manufacturer to know what the possible range of R is for all Systems, since each bit has a 50% chance of being a 1 or a 0. Since the range of R in all systems is unknown, it is not possible to build a sparse lookup table that can be used in all systems. The general sparse lookup table is therefore not a possible attack. However, it is possible for a clone manufacturer to know what the range of R is for a given System. This can be accomplished by loading a LFSR with the current result from a call to a specific System Authentication Chip's RND function, and iterating some number of times into the future. If this is done, a special ROM can be built which will only contain the responses for that particular range of R, i.e. a ROM specifically for the consumables of that particular System. But the attacker still needs to place correct information in the ROM. The attacker will therefore need to find a valid Authentication Chip and call it for each of the values in R.

Suppose the clone Authentication Chip reports a full consumable, and then allows a single use before simulating loss

of connection and insertion of a new full consumable. The clone consumable would therefore need to contain responses for authentication of a full consumable and authentication of a partially used consumable. The worst case ROM contains entries for full and partially used consumables for R over the lifetime of System. However, a valid Authentication Chip must be used to generate the information, and be partially used in the process. If a given System only produces about n R-values, the sparse lookup-ROM required is 10n bytes multiplied by the number of different values for M. The time taken to build the ROM depends on the amount of time enforced between calls to RD.

After all this, the clone manufacturer must rely on the consumer returning for a refill, since the cost of building the ROM in the first place consumes a single consumable. The clone manufacturer's business in such a situation is consequently in the refills. The time and cost then, depends on the size of R and the number of different values for M that must be incorporated in the lookup. In addition, a custom clone consumable ROM must be built to match each and every System, and a different valid Authentication Chip must be used for each System (in order to provide the full and partially used data). The use of an Authentication Chip in a System must therefore be examined to determine whether or not this kind of attack is worthwhile for a clone manufacturer. As an example, of a camera system that has about 10,000 prints in its lifetime. Assume it has a single Decrement Only value (number of prints remaining), and a delay of 1 second between calls to RD. In such a system, the sparse table will take about 3 hours to build, and consumes 100K. Remember that the construction of the ROM requires the consumption of a valid Authentication Chip, so any money charged must be worth more than a single consumable and the clone consumable combined. Thus it is not cost effective to perform this function for a single consumable (unless the clone consumable somehow contained the equivalent of multiple authentic consumables). If a clone manufacturer is going to go to the trouble of building a custom ROM for each owner of a System, an easier approach would be to update System to completely ignore the Authentication Chip.

Consequently, this attack is possible as a per-System attack, and a decision must be made about the chance of this occurring for a given System/Consumable combination. The chance will depend on the cost of the consumable and Authentication Chips, the longevity of the consumable, the profit margin on the consumable, the time taken to generate the ROM, the size of the resultant ROM, and whether customers will come back to the clone manufacturer for refills that use the same clone chip etc.

Differential cryptanalysis

Existing differential attacks are heavily dependent on the structure of S boxes, as used in DES and other similar algorithms. Although other algorithms such as HMAC-SHA1 used in Protocol 3 have no S boxes, an attacker can undertake a differential-like attack by undertaking statistical analysis of:

Minimal-difference inputs, and their corresponding outputs

Minimal-difference outputs, and their corresponding inputs

To launch an attack of this nature, sets of input/output pairs must be collected. The collection from Protocol 3 can be via Known Plaintext, or from a Partially Adaptive Chosen Plaintext attack. Obviously the latter, being chosen, will be more useful. Hashing algorithms in general are designed to be resistant to differential analysis. SHA-1 in particular has been specifically strengthened, especially by the 80 word expansion so that minimal differences in input produce will still produce outputs that vary in a larger number of bit positions (compared to 128 bit hash functions). In addition, the information collected is not a direct SHA-1 input/output set, due to the nature of the HMAC algorithm. The HMAC algorithm hashes a known value with an unknown value (the key), and the result of this hash is then rehashed with a

separate unknown value. Since the attacker does not know the secret value, nor the result of the first hash, the inputs and outputs from SHA-1 are not known, making any differential attack extremely difficult. The following is a more detailed discussion of minimally different inputs and outputs from the Authentication Chip.

Minimal Difference Inputs

This is where an attacker takes a set of X, $F_K[X]$ values where the X values are minimally different, and examines the statistical differences between the outputs $F_K[X]$. The attack relies on X values that only differ by a minimal number of bits. The question then arises as to how to obtain minimally different X values in order to compare the $F_K[X]$ values.

K_1:With K_1, the attacker needs to statistically examine minimally different X, $F_{K1}[X]$ pairs. However the attacker cannot choose any X value and obtain a related $F_{K1}[X]$ value. Since X, $F_{K1}[X]$ pairs can only be generated by calling the RND function on a System Authentication Chip, the attacker must call RND multiple times, recording each observed pair in a table. A search must then be made through the observed values for enough minimally different X values to undertake a statistical analysis of the $F_{K1}[X]$ values.

K_2:With K_2, the attacker needs to statistically examine minimally different X, $F_{K2}[X]$ pairs. The only way of generating X, $F_{K2}[X]$ pairs is via the RD function, which produces $F_{K2}[X]$ for a given Y, $F_{K1}[Y]$ pair, where $X = Y \mid M$. This means that Y and the changeable part of M can be chosen to a limited extent by an attacker. The amount of choice must therefore be limited as much as possible.

The first way of limiting an attacker's choice is to limit Y, since RD requires an input of the format Y, $F_{K1}[Y]$. Although a valid pair can be readily obtained from the RND function, it is a pair of RND's choosing. An attacker can only provide their own Y if they have obtained the appropriate pair from RND, or if they know K_1. Obtaining the appropriate pair from RND requires a Brute Force search. Knowing K_1 is only logically possible by performing cryptanalysis on pairs obtained from the RND function – effectively a known text attack. Although RND can only be called so many times per second, K_1 is common across System chips. Therefore known pairs can be generated in parallel.

The second way to limit an attacker's choice is to limit M, or at least the attacker's ability to choose M. The limiting of M is done by making some parts of M Read Only, yet different for each Authentication Chip, and other parts of M Decrement Only. The Read Only parts of M should ideally be different for each Authentication Chip, so could be information such as serial numbers, batch numbers, or random numbers. The Decrement Only parts of M mean that for an attacker to try a different M, they can only decrement those parts of M so many times – after the Decrement Only parts of M have been reduced to 0 those parts cannot be changed again. Obtaining a new Authentication chip 53 provides a new M, but the Read Only portions will be different from the previous Authentication Chip's Read Only portions, thus reducing an attacker's ability to choose M even further. Consequently an attacker can only gain a limited number of chances at choosing values for Y and M.

Minimal Difference Outputs

This is where an attacker takes a set of X, $F_K[X]$ values where the $F_K[X]$ values are minimally different, and examines the statistical differences between the X values. The attack relies on $F_K[X]$ values that only differ by a minimal number of bits. For both K_1 and K_2, there is no way for an attacker to generate an X value for a given $F_K[X]$. To do so would violate the fact that F is a one-way function. Consequently the only way for an attacker to mount an attack of this nature is to record all observed X, $F_K[X]$ pairs in a table. A search must then be made through the observed values for enough minimally different $F_K[X]$ values to undertake a statistical analysis of the X values. Given that this requires

more work than a minimally different input attack (which is extremely limited due to the restriction on M and the choice of R), this attack is not fruitful.

Message substitution attacks

In order for this kind of attack to be carried out, a clone consumable must contain a real Authentication chip 53, but one that is effectively reusable since it never gets decremented. The clone Authentication Chip would intercept messages, and substitute its own. However this attack does not give success to the attacker. A clone Authentication Chip may choose not to pass on a WR command to the real Authentication Chip. However the subsequent RD command must return the correct response (as if the WR had succeeded). To return the correct response, the hash value must be known for the specific R and M. As described in the Birthday Attack section, an attacker can only determine the hash value by actually updating M in a real Chip, which the attacker does not want to do. Even changing the R sent by System does not help since the System Authentication Chip must match the R during a subsequent TST. A Message substitution attack would therefore be unsuccessful. This is only true if System updates the amount of consumable remaining before it is used.

Reverse engineering the key generator

If a pseudo-random number generator is used to generate keys, there is the potential for a clone manufacture to obtain the generator program or to deduce the random seed used. This was the way in which the Netscape security program was initially broken.

Bypassing authentication altogether

Protocol 3 requires the System to update the consumable state data before the consumable is used, and follow every write by a read (to authenticate the write). Thus each use of the consumable requires an authentication. If the System adheres to these two simple rules, a clone manufacturer will have to simulate authentication via a method above (such as sparse ROM lookup).

Reuse of Authentication Chips

As described above, Protocol 3 requires the System to update the consumable state data before the consumable is used, and follow every write by a read (to authenticate the write). Thus each use of the consumable requires an authentication. If a consumable has been used up, then its Authentication Chip will have had the appropriate state-data values decremented to 0. The chip can therefore not be used in another consumable. Note that this only holds true for Authentication Chips that hold Decrement-Only data items. If there is no state data decremented with each usage, there is nothing stopping the reuse of the chip. This is the basic difference between Presence-Only Authentication and Consumable Lifetime Authentication. Protocol 3 allows both. The bottom line is that if a consumable has Decrement Only data items that are used by the System, the Authentication Chip cannot be reused without being completely reprogrammed by a valid Programming Station that has knowledge of the secret key.

Management decision to omit authentication to save costs

Although not strictly an external attack, a decision to omit authentication in future Systems in order to save costs will have widely varying effects on different markets. In the case of high volume consumables, it is essential to remember that it is very difficult to introduce authentication after the market has started, as systems requiring authenticated consumables will not work with older consumables still in circulation. Likewise, it is impractical to discontinue authentication at any stage, as older Systems will not work with the new, unauthenticated, consumables. In he second case, older Systems can be individually altered by replacing the System Authentication Chip by a simple chip that has

the same programming interface, but whose TST function always succeeds. Of course the System may be programmed to test for an always-succeeding TST function, and shut down. In the case of a specialized pairing, such as a car/car-keys, or door/door-key, or some other similar situation, the omission of authentication in future systems is trivial and non-repercussive. This is because the consumer is sold the entire set of System and Consumable Authentication Chips at the one time.

Garrote/bribe attack

This form of attack is only successful in one of two circumstances:

K_1, K_2, and R are already recorded by the chip-programmer, or

the attacker can coerce future values of K_1, K_2, and R to be recorded.

If humans or computer systems external to the Programming Station do not know the keys, there is no amount of force or bribery that can reveal them. The level of security against this kind of attack is ultimately a decision for the System/Consumable owner, to be made according to the desired level of service. For example, a car company may wish to keep a record of all keys manufactured, so that a person can request a new key to be made for their car. However this allows the potential compromise of the entire key database, allowing an attacker to make keys for any of the manufacturer's existing cars. It does not allow an attacker to make keys for any new cars. Of course, the key database itself may also be encrypted with a further key that requires a certain number of people to combine their key portions together for access. If no record is kept of which key is used in a particular car, there is no way to make additional keys should one become lost. Thus an owner will have to replace his car's Authentication Chip and all his car-keys. This is not necessarily a bad situation. By contrast, in a consumable such as a printer ink cartridge, the one key combination is used for all Systems and all consumables. Certainly if no backup of the keys is kept, there is no human with knowledge of the key, and therefore no attack is possible. However, a no-backup situation is not desirable for a consumable such as ink cartridges, since if the key is lost no more consumables can be made. The manufacturer should therefore keep a backup of the key information in several parts, where a certain number of people must together combine their portions to reveal the full key information. This may be required if case the chip programming station needs to be reloaded. In any case, none of these attacks are against Protocol 3 itself, since no humans are involved in the authentication process. Instead, it is an attack against the programming stage of the chips.

HMAC-SHA1

The mechanism for authentication is the HMAC-SHA1 algorithm, acting on one of:

HMAC-SHA1 (R, K_1), or

HMAC-SHA1 ($R \mid M$, K_2)

We will now examine the HMAC-SHA1 algorithm in greater detail than covered so far, and describes an optimization of the algorithm that requires fewer memory resources than the original definition.

HMAC

The HMAC algorithm proceeds, given the following definitions:

H = the hash function (e.g. MD5 or SHA-1)

n = number of bits output from H (e.g. 160 for SHA-1, 128 bits for MD5)

M = the data to which the MAC function is to be applied

K = the secret key shared by the two parties

ipad= 0x36 repeated 64 times

opad = 0x5C repeated 64 times

The HMAC algorithm is as follows:

Extend K to 64 bytes by appending 0x00 bytes to the end of K

XOR the 64 byte string created in (1) with ipad

Append data stream M to the 64 byte string created in (2)

Apply H to the stream generated in (3)

XOR the 64 byte string created in (1) with opad

Append the H result from (4) to the 64 byte string resulting from (5)

Apply H to the output of (6) and output the result

Thus:

$HMAC[M] = H[(K \oplus opad) \mid H[(K \oplus ipad)|M]]$

HMAC-SHA1 algorithm is simply HMAC with H = SHA-1.

SHA-1

The SHA1 hashing algorithm is defined in the algorithm as summarized here.

Nine 32-bit constants are defined. There are 5 constants used to initialize the chaining variables, and there are 4 additive constants.

	Initial Chaining Values		Additive Constants
h_1	0x67452301	y_1	0x5A827999
h_2	0xEFCDAB89	y_2	0x6ED9EBA1
h_3	0x98BADCFE	y_3	0x8F1BBCDC
h_4	0x10325476	y_4	0xCA62C1D6
h_5	0xC3D2E1F0		

Non-optimized SHA-1 requires a total of 2912 bits of data storage:

Five 32-bit chaining variables are defined: H_1, H_2, H_3, H_4 and H_5.

Five 32-bit working variables are defined: A, B, C, D, and E.

One 32-bit temporary variable is defined: t.

Eighty 32-bit temporary registers are defined: $X_{0\text{-}79}$.

The following functions are defined for SHA-1:

Symbolic Nomenclature	Description
+	Addition modulo 2^{32}
X Y	Result of rotating X left through Y bit positions
f(X, Y, Z)	$(X \wedge Y) \vee (\neg X \wedge Z)$
g(X, Y, Z)	$(X \wedge Y) \vee (X \wedge Z) \vee (Y \wedge Z)$
h(X, Y, Z)	$X \oplus Y \oplus Z$

The hashing algorithm consists of firstly padding the input message to be a multiple of 512 bits and initializing the chaining variables $H_{1\text{-}5}$ with $h_{1\text{-}5}$. The padded message is then processed in 512-bit chunks, with the output hash value being the final 160-bit value given by the concatenation of the chaining variables: $H_1 \mid H_2 \mid H_3 \mid H_4 \mid H_5$. The steps of the SHA-1 algorithm are now examined in greater detail.

Step 1. Preprocessing

The first step of SHA-1 is to pad the input message to be a multiple of 512 bits as follows and to initialize the chaining variables.

Steps to follow to preprocess the input message	
Pad the input message	Append a 1 bit to the message
	Append 0 bits such that the length of the padded message is 64-bits short of a multiple of 512 bits.
	Append a 64-bit value containing the length in bits of the original input message. Store the length as most significant bit through to least significant bit.
Initialize the chaining variables	$H_1 \leftarrow h_1$, $H_2 \leftarrow h_2$, $H_3 \leftarrow h_3$, $H_4 \leftarrow h_4$, $H_5 \leftarrow h_5$

Step 2. Processing

The padded input message can now be processed. We process the message in 512-bit blocks. Each 512-bit block is in the form of 16 x 32-bit words, referred to as $\text{InputWord}_{0\text{-}15}$.

Steps to follow for each 512 bit block ($InputWord_{0-15}$)	
Copy the 512 input bits into X_{0-15}	For j=0 to 15 $X_j = InputWord_j$
Expand X_{0-15} into X_{16-79}	For j=16 to 79 $X_j \leftarrow ((X_{j-3} \oplus X_{j-8} \oplus X_{j-14} \oplus X_{j-16})$ 1)
Initialize working variables	$A \leftarrow H_1$, $B \leftarrow H_2$, $C \leftarrow H_3$, $D \leftarrow H_4$, $E \leftarrow H_5$
Round 1	For j=0 to 19 $t \leftarrow$ ((A 5) + f(B, C, D) + E + X_j + y_1) $E \leftarrow D$, $D \leftarrow C$, $C \leftarrow$ (B 30), $B \leftarrow A$, $A \leftarrow t$
Round 2	For j = 20 to 39 $t \leftarrow$ ((A 5) + h(B, C, D) + E + X_j + y_2) $E \leftarrow D$, $D \leftarrow C$, $C \leftarrow$ (B 30), $B \leftarrow A$, $A \leftarrow t$
Round 3	For j = 40 to 59 $t \leftarrow$ ((A 5) + g(B, C, D) + E + X_j + y_3) $E \leftarrow D$, $D \leftarrow C$, $C \leftarrow$ (B 30), $B \leftarrow A$, $A \leftarrow t$
Round 4	For j = 60 to 79 $t \leftarrow$ ((A 5) + h(B, C, D) + E + X_j + y_4) $E \leftarrow D$, $D \leftarrow C$, $C \leftarrow$ (B 30), $B \leftarrow A$, $A \leftarrow t$
Update chaining variables	$H_1 \leftarrow H_1 + A$, $H_2 \leftarrow H_2 + B$, $H_3 \leftarrow H_3 + C$, $H_4 \leftarrow H_4 + D$, $H_5 \leftarrow H_5 + E$

Step 3. Completion

After all the 512-bit blocks of the padded input message have been processed, the output hash value is the final 160-bit value given by: $H_1 \mid H_2 \mid H_3 \mid H_4 \mid H_5$.

Optimization for Hardware Implementation

The SHA-1 Step 2 procedure is not optimized for hardware. In particular, the 80 temporary 32-bit registers use up valuable silicon on a hardware implementation. This section describes an optimization to the SHA-1 algorithm that only uses 16 temporary registers. The reduction in silicon is from 2560 bits down to 512 bits, a saving of over 2000 bits. It may not be important in some applications, but in the Authentication Chip storage space must be reduced where possible. The optimization is based on the fact that although the original 16-word message block is expanded into an 80-word message block, the 80 words are not updated during the algorithm. In addition, the words rely on the previous 16 words only, and hence the expanded words can be calculated on-the-fly during processing, as long as we keep 16 words for the backward references. We require rotating counters to keep track of which register we are up to using, but the effect is to save a large amount of storage. Rather than index X by a single value j, we use a 5 bit counter to count

through the iterations. This can be achieved by initializing a 5-bit register with either 16 or 20, and decrementing it until it reaches 0. In order to update the 16 temporary variables as if they were 80, we require 4 indexes, each a 4-bit register. All 4 indexes increment (with wraparound) during the course of the algorithm.

Steps to follow for each 512 bit block (InputWord$_{0-15}$)	
Initialize working variables	$A \leftarrow H_1$, $B \leftarrow H_2$, $C \leftarrow H_3$, $D \leftarrow H_4$, $E \leftarrow H_5$ $N_1 \leftarrow 13$, $N_2 \leftarrow 8$, $N_3 \leftarrow 2$, $N_4 \leftarrow 0$
Round 0 Copy the 512 input bits into X_{0-15}	Do 16 times: $X_{N4} = \text{InputWord}_{N4}$ $[\ N_1,\ N_2,\ N_3]_{\text{optional}}\ \ N_4$
Round 1A	Do 16 times: $t \leftarrow ((A\ \ 5) + f(B, C, D) + E + X_{N4} + y_1)$ $[\ N_1,\ N_2,\ N_3]_{\text{optional}}\ \ N_4$ $E \leftarrow D$, $D \leftarrow C$, $C \leftarrow (B\ \ 30)$, $B \leftarrow A$, $A \leftarrow t$
Round 1B	Do 4 times: $X_{N4} \leftarrow ((X_{N1} \oplus X_{N2} \oplus X_{N3} \oplus X_{N4})\ \ 1)$ $t \leftarrow ((A\ \ 5) + f(B, C, D) + E + X_{N4} + y_1)$ $N_1,\ N_2,\ N_3,\ N_4$ $E \leftarrow D$, $D \leftarrow C$, $C \leftarrow (B\ \ 30)$, $B \leftarrow A$, $A \leftarrow t$
Round 2	Do 20 times: $X_{N4} \leftarrow ((X_{N1} \oplus X_{N2} \oplus X_{N3} \oplus X_{N4})\ \ 1)$ $t \leftarrow ((A\ \ 5) + h(B, C, D) + E + X_{N4} + y_2)$ $N_1,\ N_2,\ N_3,\ N_4$ $E \leftarrow D$, $D \leftarrow C$, $C \leftarrow (B\ \ 30)$, $B \leftarrow A$, $A \leftarrow t$
Round 3	Do 20 times: $X_{N4} \leftarrow ((X_{N1} \oplus X_{N2} \oplus X_{N3} \oplus X_{N4})\ \ 1)$ $t \leftarrow ((A\ \ 5) + g(B, C, D) + E + X_{N4} + y_3)$ $N_1,\ N_2,\ N_3,\ N_4$ $E \leftarrow D$, $D \leftarrow C$, $C \leftarrow (B\ \ 30)$, $B \leftarrow A$, $A \leftarrow t$
Round 4	Do 20 times: $X_{N4} \leftarrow ((X_{N1} \oplus X_{N2} \oplus X_{N3} \oplus X_{N4})\ \ 1)$ $t \leftarrow ((A\ \ 5) + h(B, C, D) + E + X_{N4} + y_4)$ $N_1,\ N_2,\ N_3,\ N_4$ $E \leftarrow D$, $D \leftarrow C$, $C \leftarrow (B\ \ 30)$, $B \leftarrow A$, $A \leftarrow t$
Update chaining variables	$H_1 \leftarrow H_1 + A$, $H_2 \leftarrow H_2 + B$, $H_3 \leftarrow H_3 + C$, $H_4 \leftarrow H_4 + D$, $H_5 \leftarrow H_5 + E$

The incrementing of N_1, N_2, and N_3 during Rounds 0 and 1A is optional. A software implementation would not increment them, since it takes time, and at the end of the 16 times through the loop, all 4 counters will be their original values. Designers of hardware may wish to increment all 4 counters together to save on control logic. Round 0 can be completely omitted if the caller loads the 512 bits of $X_{0\text{-}15}$.

HMAC-SHA1

In the Authentication Chip implementation, the HMAC-SHA1 unit only ever performs hashing on two types of inputs: on R using K_1 and on R | M using K_2. Since the inputs are two constant lengths, rather than have HMAC and SHA-1 as separate entities on chip, they can be combined and the hardware optimized. The padding of messages in SHA-1 Step 1 (a 1 bit, a string of 0 bits, and the length of the message) is necessary to ensure that different messages will not look the same after padding. Since we only deal with 2 types of messages, our padding can be constant 0s. In addition, the optimized version of the SHA-1 algorithm is used, where only 16 32-bit words are used for temporary storage. These 16 registers are loaded directly by the optimized HMAC-SHA1 hardware. The Nine 32-bit constants $h_{1\text{-}5}$ and $y_{1\text{-}4}$ are still required, although the fact that they are constants is an advantage for hardware implementation. Hardware optimized HMAC-SHA-1 requires a total of 1024 bits of data storage:

Five 32-bit chaining variables are defined: H_1, H_2, H_3, H_4 and H_5.

Five 32-bit working variables are defined: A, B, C, D, and E.

Five 32-bit variables for temporary storage and final result: $Buff160_{1\text{-}5}$

One 32 bit temporary variable is defined: t.

Sixteen 32-bit temporary registers are defined: $X_{0\text{-}15}$.

The following two sections describe the steps for the two types of calls to HMAC-SHA1.

H[R, K_1]

In the case of producing the keyed hash of R using K_1, the original input message R is a constant length of 160 bits. We can therefore take advantage of this fact during processing. Rather than load $X_{0\text{-}15}$ during the first part of the SHA-1 algorithm, we load $X_{0\text{-}15}$ directly, and thereby omit Round 0 of the optimized Process Block (Step 2) of SHA-1. The pseudocode takes on the following steps:

Step	Description	Action
1	Process K ⊕ ipad	$X_{0-4} \leftarrow K_1 \oplus 0x363636...$
2		$X_{5-15} \leftarrow 0x363636...$
3		$H_{1-5} \leftarrow h_{1-5}$
4		Process Block
5	Process R	$X_{0-4} \leftarrow R$
6		$X_{5-15} \leftarrow 0$
7		Process Block
8		$Buff160_{1-5} \leftarrow H_{1-5}$
9	Process K ⊕ opad	$X_{0-4} \leftarrow K_1 \oplus 0x5C5C5C...$
10		$X_{5-15} \leftarrow 0x5C5C5C...$
11		$H_{1-5} \leftarrow h_{1-5}$
12		Process Block
13	Process previous H[x]	$X_{0-4} \leftarrow$ Result
14		$X_{5-15} \leftarrow 0$
15		Process Block
16	Get results	$Buff160_{1-5} \leftarrow H_{1-5}$

<u>H[R | M, K_2]</u>

In the case of producing the keyed hash of R | M using K_2, the original input message is a constant length of 416 (256+160) bits. We can therefore take advantage of this fact during processing. Rather than load X_{0-15} during the first part of the SHA-1 algorithm, we load X_{0-15} directly, and thereby omit Round 0 of the optimized Process Block (Step 2) of SHA-1. The pseudocode takes on the following steps:

Step	Description	Action
1	Process K ⊕ ipad	$X_{0-4} \leftarrow K_2 \oplus 0x363636...$
2		$X_{5-15} \leftarrow 0x363636...$
3		$H_{1-5} \leftarrow h_{1-5}$
4		Process Block
5	Process R | M	$X_{0-4} \leftarrow R$
6		$X_{5-12} \leftarrow M$
7		$X_{13-15} \leftarrow 0$
8		Process Block
9		Temp $\leftarrow H_{1-5}$
10	Process K ⊕ opad	$X_{0-4} \leftarrow K_2 \oplus 0x5C5C5C...$
11		$X_{5-15} \leftarrow 0x5C5C5C...$
12		$H_{1-5} \leftarrow h_{1-5}$
13		Process Block
14	Process previous H[x]	$X_{0-4} \leftarrow$Temp
15		$X_{5-15} \leftarrow 0$
16		Process Block
17	Get results	Result $\leftarrow H_{1-5}$

Data Storage Integrity

Each Authentication Chip contains some non-volatile memory in order to hold the variables required by Authentication Protocol 3. The following non-volatile variables are defined:

Variable Name	Size (in bits)	Description
M[0..15]	256	16 words (each 16 bits) containing state data such as serial numbers, media remaining etc.
K_1	160	Key used to transform R during authentication.
K_2	160	Key used to transform M during authentication.
R	160	Current random number
AccessMode[0..15]	32	The 16 sets of 2-bit AccessMode values for M[n].
MinTicks	32	The minimum number of clock ticks between calls to key-based functions
SIWritten	1	If set, the secret key information (K_1, K_2, and R) has been written to the chip. If clear, the secret information has not been written yet.
IsTrusted	1	If set, the RND and TST functions can be called, but RD and WR functions cannot be called. If clear, the RND and TST functions cannot be called, but RD and WR functions can be called.
Total bits	**802**	

Note that if these variables are in Flash memory, it is not a simple matter to write a new value to replace the old. The memory must be erased first, and then the appropriate bits set. This has an effect on the algorithms used to change Flash memory based variables. For example, Flash memory cannot easily be used as shift registers. To update a Flash memory variable by a general operation, it is necessary to follow these steps:

Read the entire N bit value into a general purpose register;

Perform the operation on the general purpose register;

Erase the Flash memory corresponding to the variable; and

Set the bits of the Flash memory location based on the bits set in the general-purpose register.

A RESET of the Authentication Chip has no effect on these non-volatile variables.

M and AccessMode

Variables M[0] through M[15] are used to hold consumable state data, such as serial numbers, batch numbers, and amount of consumable remaining. Each M[n] register is 16 bits, making the entire M vector 256 bits (32 bytes). Clients cannot read from or written to individual M[n] variables. Instead, the entire vector, referred to as M, is read or written in a single logical access. M can be read using the RD (read) command, and written to via the WR (write) command. The commands only succeed if K_1 and K_2 are both defined (SIWritten = 1) and the Authentication Chip is a consumable non-trusted chip (IsTrusted = 0). Although M may contain a number of different data types, they differ only in their write permissions. Each data type can always be read. Once in client memory, the 256 bits can be

interpreted in any way chosen by the client. The entire 256 bits of M are read at one time instead of in smaller amounts for reasons of security, as described in the chapter entitled **Authentication**. The different write permissions are outlined in the following table:

Data Type	Access Note
Read Only	Can never be written to
ReadWrite	Can always be written to
Decrement Only	Can only be written to if the new value is less than the old value. Decrement Only values are typically 16-bit or 32-bit values, but can be any multiple of 16 bits.

To accomplish the protection required for writing, a 2-bit access mode value is defined for each M[n]. The following table defines the interpretation of the 2-bit access mode bit-pattern:

Bits	Op	Interpretation	Action taken during Write command
00	RW	ReadWrite	The new 16-bit value is always written to M[n].
01	MSR	Decrement Only (Most Significant Region)	The new 16-bit value is only written to M[n] if it is less than the value currently in M[n]. This is used for access to the Most Significant 16 bits of a Decrement Only number.
10	NMSR	Decrement Only (Not the Most Significant Region)	The new 16-bit value is only written to M[n] if M[n+1] can also be written. The NMSR access mode allows multiple precision values of 32 bits and more (multiples of 16 bits) to decrement.
11	RO	Read Only	The new 16-bit value is ignored. M[n] is left unchanged.

The 16 sets of access mode bits for the 16 M[n] registers are gathered together in a single 32-bit AccessMode register. The 32 bits of the AccessMode register correspond to M[n] with n as follows:

MSB LSB

15	14	13	12	11	10	9	8	7	6	5	4	3	2	1	0

Each 2-bit value is stored in hi/lo format. Consequently, if M[0-5] were access mode MSR, with M[6-15] access mode RO, the 32-bit AccessMode register would be:

11-11-11-11-11-11-11-11-11-11-01-01-01-01-01-01

During execution of a WR (write) command, AccessMode[n] is examined for each M[n], and a decision made as to whether the new M[n] value will replace the old. The AccessMode register is set using the Authentication Chip's SAM (Set Access Mode) command. Note that the Decrement Only comparison is unsigned, so any Decrement Only values that require negative ranges must be shifted into a positive range. For example, a consumable with a Decrement Only data item range of –50 to 50 must have the range shifted to be 0 to 100. The System must then interpret the range 0 to 100 as being –50 to 50. Note that most instances of Decrement Only ranges are N to 0, so there is no range shift required. For Decrement Only data items, arrange the data in order from most significant to least significant 16-bit quantities from M[n] onward. The access mode for the most significant 16 bits (stored in M[n]) should be set to MSR. The remaining registers (M[n+1], M[n+2] etc) should have their access modes set to NMSR. If erroneously set to NMSR, with no associated MSR region, each NMSR region will be considered independently instead of being a multi-precision comparison.

$\underline{K_1}$

K_1 is the 160-bit secret key used to transform R during the authentication protocol. K_1 is programmed along with K_2 and R with the SSI (Set Secret Information) command. Since K_1 must be kept secret, clients cannot directly read K_1. The commands that make use of K_1 are RND and RD. RND returns a pair R, $F_{K1}[R]$ where R is a random number, while RD requires an X, $F_{K1}[X]$ pair as input. K_1 is used in the keyed one-way hash function HMAC-SHA1. As such it should be programmed with a physically generated random number, gathered from a physically random phenomenon. K_1 must NOT be generated with a computer-run random number generator. The security of the Authentication chips depends on K_1, K_2 and R being generated in a way that is not deterministic. For example, to set K_1, a person can toss a fair coin 160 times, recording heads as 1, and tails as 0. K_1 is automatically cleared to 0 upon execution of a CLR command. It can only be programmed to a non-zero value by the SSI command.

$\underline{K_2}$

K_2 is the 160-bit secret key used to transform M | R during the authentication protocol. K_2 is programmed along with K_1 and R with the SSI (Set Secret Information) command. Since K_2 must be kept secret, clients cannot directly read K_2. The commands that make use of K_2 are RD and TST. RD returns a pair M, $F_{K2}[M \mid X]$ where X was passed in as one of the parameters to the RD function. TST requires an M, $F_{K2}[M \mid R]$ pair as input, where R was obtained from the Authentication Chip's RND function. K_2 is used in the keyed one-way hash function HMAC-SHA1. As such it should be programmed with a physically generated random number, gathered from a physically random phenomenon. K_2 must NOT be generated with a computer-run random number generator. The security of the Authentication chips depends on K_1, K_2 and R being generated in a way that is not deterministic. For example, to set K_2, a person can toss a fair coin 160 times, recording heads as 1, and tails as 0. K_2 is automatically cleared to 0 upon execution of a CLR command. It can only be programmed to a non-zero value by the SSI command.

R and IsTrusted

R is a 160-bit random number seed that is programmed along with K_1 and K_2 with the SSI (Set Secret Information) command. R does not have to be kept secret, since it is given freely to callers via the RND command. However R must be changed only by the Authentication Chip, and not set to any chosen value by a caller. R is used during the TST command to ensure that the R from the previous call to RND was used to generate the $F_{K2}[M \mid R]$ value in the non-trusted Authentication Chip (ChipA). Both RND and TST are only used in trusted Authentication Chips (ChipT).

IsTrusted is a 1-bit flag register that determines whether or not the Authentication Chip is a trusted chip (ChipT):

If the IsTrusted bit is set, the chip is considered to be a trusted chip, and hence clients can call RND and TST functions (but not RD or WR).

If the IsTrusted bit is clear, the chip is not considered to be trusted. Therefore RND and TST functions cannot be called (but RD and WR functions can be called instead). System never needs to call RND or TST on the consumable (since a clone chip would simply return 1 to a function such as TST, and a constant value for RND).

The IsTrusted bit has the added advantage of reducing the number of available R, $F_{K1}[R]$ pairs obtainable by an attacker, yet still maintain the integrity of the Authentication protocol. To obtain valid R, $F_{K1}[R]$ pairs, an attacker requires a System Authentication Chip, which is more expensive and less readily available than the consumables. Both R and the IsTrusted bit are cleared to 0 by the CLR command. They are both written to by the issuing of the SSI command. The IsTrusted bit can only set by storing a non-zero seed value in R via the SSI command (R must be non-zero to be a valid LFSR state, so this is quite reasonable). R is changed via a 160-bit maximal period LFSR with taps on bits 1, 2, 4, and 159, and is changed only by a successful call to TST (where 1 is returned).

Authentication Chips destined to be trusted Chips used in Systems (ChipT) should have their IsTrusted bit set during programming, and Authentication Chips used in Consumables (ChipA) should have their IsTrusted bit kept clear (by storing 0 in R via the SSI command during programming). There is no command to read or write the IsTrusted bit directly. The security of the Authentication Chip does not only rely upon the randomness of K_1 and K_2 and the strength of the HMAC-SHA1 algorithm. To prevent an attacker from building a sparse lookup table, the security of the Authentication Chip also depends on the range of R over the lifetime of all Systems. What this means is that an attacker must not be able to deduce what values of R there are in produced and future Systems. As such R should be programmed with a physically generated random number, gathered from a physically random phenomenon. **R must NOT be generated with a computer-run random number generator**. The generation of R must not be deterministic. For example, to generate an R for use in a trusted System chip, a person can toss a fair coin 160 times, recording heads as 1, and tails as 0. 0 is the only non-valid initial value for a trusted R is 0 (or the IsTrusted bit will not be set).

SIWritten

The SIWritten (Secret Information Written) 1-bit register holds the status of the secret information stored within the Authentication Chip. The secret information is K_1, K_2 and R. A client cannot directly access the SIWritten bit. Instead, it is cleared via the CLR command (which also clears K_1, K_2 and R). When the Authentication Chip is programmed with secret keys and random number seed using the SSI command (regardless of the value written), the SIWritten bit is set automatically. Although R is strictly not secret, it must be written together with K_1 and K_2 to ensure that an attacker cannot generate their own random number seed in order to obtain chosen R, $F_{K1}[R]$ pairs. The SIWritten status bit is used by all functions that access K_1, K_2, or R. If the SIWritten bit is clear, then calls to RD, WR, RND, and TST are interpreted as calls to CLR.

MinTicks

There are two mechanisms for preventing an attacker from generating multiple calls to TST and RD functions in a short period of time. The first is a clock limiting hardware component that prevents the internal clock from operating at

a speed more than a particular maximum (e.g. 10 MHz). The second mechanism is the 32-bit MinTicks register, which is used to specify the minimum number of clock ticks that must elapse between calls to key-based functions. The MinTicks variable is cleared to 0 via the CLR command. Bits can then be set via the SMT (Set MinTicks) command. The input parameter to SMT contains the bit pattern that represents which bits of MinTicks are to be set. The practical effect is that an attacker can only increase the value in MinTicks (since the SMT function only sets bits). In addition, there is no function provided to allow a caller to read the current value of this register. The value of MinTicks depends on the operating clock speed and the notion of what constitutes a reasonable time between key-based function calls (application specific). The duration of a single tick depends on the operating clock speed. This is the maximum of the input clock speed and the Authentication Chip's clock-limiting hardware. For example, the Authentication Chip's clock-limiting hardware may be set at 10 MHz (it is not changeable), but the input clock is 1 MHz. In this case, the value of 1 tick is based on 1 MHz, not 10 MHz. If the input clock was 20 MHz instead of 1 MHz, the value of 1 tick is based on 10 MHz (since the clock speed is limited to 10 MHz).

Once the duration of a tick is known, the MinTicks value can to be set. The value for MinTicks is the minimum number of ticks required to pass between calls to the key-based RD and TST functions. The value is a real-time number, and divided by the length of an operating tick. Suppose the input clock speed matches the maximum clock speed of 10 MHz. If we want a minimum of 1 second between calls to key based functions, the value for MinTicks is set to 10,000,000. Consider an attacker attempting to collect X, $F_{K1}[X]$ pairs by calling RND, RD and TST multiple times. If the MinTicks value is set such that the amount of time between calls to TST is 1 second, then each pair requires 1 second to generate. To generate 2^{25} pairs (only requiring 1.25 GB of storage), an attacker requires more than 1 year. An attack requiring 2^{64} pairs would require 5.84×10^{11} years using a single chip, or 584 years if 1 billion chips were used, making such an attack completely impractical in terms of time (not to mention the storage requirements!).

With regards to K_1, it should be noted that the MinTicks variable only slows down an attacker and causes the attack to cost more since it does not stop an attacker using multiple System chips in parallel. However MinTicks does make an attack on K_2 more difficult, since each consumable has a different M (part of M is random read-only data). In order to launch a differential attack, minimally different inputs are required, and this can only be achieved with a single consumable (containing an effectively constant part of M). Minimally different inputs require the attacker to use a single chip, and MinTicks causes the use of a single chip to be slowed down. If it takes a year just to get the data to start searching for values to begin a differential attack this increases the cost of attack and reduces the effective market time of a clone consumable.

Authentication Chip Commands

The System communicates with the Authentication Chips via a simple operation command set. This section details the actual commands and parameters necessary for implementation of Protocol 3. The Authentication Chip is defined here as communicating to System via a serial interface as a minimum implementation. It is a trivial matter to define an equivalent chip that operates over a wider interface (such as 8, 16 or 32 bits). Each command is defined by 3-bit opcode. The interpretation of the opcode can depend on the current value of the IsTrusted bit and the current value of the IsWritten bit. The following operations are defined:

Op	T	W	Mn	Input	Output	Description
000	-	-	CLR	-	-	Clear
001	0	0	SSI	[160, 160, 160]	-	Set Secret Information
010	0	1	RD	[160, 160]	[256, 160]	Read M securely
010	1	1	RND	-	[160, 160]	Random
011	0	1	WR	[256]	-	Write M
011	1	1	TST	[256, 160]	[1]	Test
100	0	1	SAM	[32]	[32]	Set Access Mode
101	-	1	GIT	-	[1]	Get Is Trusted
110	-	1	SMT	[32]	-	Set MinTicks

Op = Opcode, **T** = IsTrusted value, **W** = IsWritten value,

Mn = Mnemonic, [n] = number of bits required for parameter

Any command not defined in this table is interpreted as NOP (No Operation). Examples include opcodes 110 and 111 (regardless of IsTrusted or IsWritten values), and any opcode other than SSI when IsWritten = 0. Note that the opcodes for RD and RND are the same, as are the opcodes for WR and TST. The actual command run upon receipt of the opcode will depend on the current value of the IsTrusted bit (as long as IsWritten is 1). Where the IsTrusted bit is clear, RD and WR functions will be called. Where the IsTrusted bit is set, RND and TST functions will be called. The two sets of commands are mutually exclusive between trusted and non-trusted Authentication Chips, and the same opcodes enforces this relationship. Each of the commands is examined in detail in the subsequent sections. Note that some algorithms are specifically designed because Flash memory is assumed for the implementation of non-volatile variables.

CLR	Clear
Input	None
Output	None
Changes	All

The CLR (Clear) Command is designed to completely erase the contents of all Authentication Chip memory. This includes all keys and secret information, access mode bits, and state data. After the execution of the CLR command, an Authentication Chip will be in a programmable state, just as if it had been freshly manufactured. It can be reprogrammed with a new key and reused. A CLR command consists of simply the CLR command opcode. Since the Authentication Chip is serial, this must be transferred one bit at a time. The bit order is LSB to MSB for each command component. A CLR command is therefore sent as bits 0-2 of the CLR opcode. A total of 3 bits are transferred. The CLR command can be called directly at any time. The order of erasure is important. SIWritten must

be cleared first, to disable further calls to key access functions (such as RND, TST, RD and WR). If the AccessMode bits are cleared before SIWritten, an attacker could remove power at some point after they have been cleared, and manipulate M, thereby have a better chance of retrieving the secret information with a partial chosen text attack. The CLR command is implemented with the following steps:

Step	Action
1	Erase SIWritten Erase IsTrusted Erase K_1 Erase K_2 Erase R Erase M
2	Erase AccessMode Erase MinTicks

Once the chip has been cleared it is ready for reprogramming and reuse. A blank chip is of no use to an attacker, since although they can create any value for M (M can be read from and written to), key-based functions will not provide any information as K_1 and K_2 will be incorrect. It is not necessary to consume any input parameter bits if CLR is called for any opcode other than CLR. An attacker will simply have to RESET the chip. The reason for calling CLR is to ensure that all secret information has been destroyed, making the chip useless to an attacker.

SSI – Set Secret Information

Input: K_1, K_2, R = [160 bits, 160 bits, 160 bits]

Output: None

Changes: K_1, K_2, R, SIWritten, IsTrusted

The SSI (Set Secret Information) command is used to load the K_1, K_2 and R variables, and to set SIWritten and IsTrusted flags for later calls to RND, TST, RD and WR commands. An SSI command consists of the SSI command opcode followed by the secret information to be stored in the K_1, K_2 and R registers. Since the Authentication Chip is serial, this must be transferred one bit at a time. The bit order is LSB to MSB for each command component. An SSI command is therefore sent as: bits 0-2 of the SSI opcode, followed by bits 0-159 of the new value for K_1, bits 0-159 of the new value for K_2, and finally bits 0-159 of the seed value for R. A total of 483 bits are transferred. The K_1, K_2, R, SIWritten, and IsTrusted registers are all cleared to 0 with a CLR command. They can only be set using the SSI command.

The SSI command uses the flag SIWritten to store the fact that data has been loaded into K_1, K_2, and R. If the SIWritten and IsTrusted flags are clear (this is the case after a CLR instruction), then K_1, K_2 and R are loaded with the new values. If either flag is set, an attempted call to SSI results in a CLR command being executed, since only an

attacker or an erroneous client would attempt to change keys or the random seed without calling CLR first. The SSI command also sets the IsTrusted flag depending on the value for R. If R = 0, then the chip is considered untrustworthy, and therefore IsTrusted remains at 0. If R ≠ 0, then the chip is considered trustworthy, and therefore IsTrusted is set to 1. Note that the setting of the IsTrusted bit only occurs during the SSI command. If an Authentication Chip is to be reused, the CLR command must be called first. The keys can then be safely reprogrammed with an SSI command, and fresh state information loaded into M using the SAM and WR commands. The SSI command is implemented with the following steps:

Step	Action
1	CLR
2	K_1 ← Read 160 bits from client
3	K_2 ← Read 160 bits from client
4	R ← Read 160 bits from client
5	IF (R ≠ 0) IsTrusted ← 1
6	SIWritten ← 1

RD – Read

Input: X, $F_{K1}[X]$ = [160 bits, 160 bits]

Output: M, $F_{K2}[X \mid M]$ = [256 bits, 160 bits]

Changes: R

The RD (Read) command is used to securely read the entire 256 bits of state data (M) from a non-trusted Authentication Chip. Only a valid Authentication Chip will respond correctly to the RD request. The output bits from the RD command can be fed as the input bits to the TST command on a trusted Authentication Chip for verification, with the first 256 bits (M) stored for later use if (as we hope) TST returns 1. Since the Authentication Chip is serial, the command and input parameters must be transferred one bit at a time. The bit order is LSB to MSB for each command component. A RD command is therefore: bits 0-2 of the RD opcode, followed by bits 0-159 of X, and bits 0-159 of $F_{K1}[X]$. 323 bits are transferred in total. X and $F_{K1}[X]$ are obtained by calling the trusted Authentication Chip's RND command. The 320 bits output by the trusted chip's RND command can therefore be fed directly into the non-trusted chip's RD command, with no need for these bits to be stored by System. The RD command can only be used when the following conditions have been met:

SIWritten = 1 indicating that K_1, K_2 and R have been set up via the SSI command; and

IsTrusted = 0 indicating the chip is not trusted since it is not permitted to generate random number sequences;

In addition, calls to RD must wait for the MinTicksRemaining register to reach 0. Once it has done so, the register is reloaded with MinTicks to ensure that a minimum time will elapse between calls to RD. Once MinTicksRemaining has been reloaded with MinTicks, the RD command verifies that the input parameters are valid. This is accomplished by

internally generating $F_{K1}[X]$ for the input X, and then comparing the result against the input $F_{K1}[X]$. This generation and comparison must take the same amount of time regardless of whether the input parameters are correct or not. If the times are not the same, an attacker can gain information about which bits of $F_{K1}[X]$ are incorrect. The only way for the input parameters to be invalid is an erroneous System (passing the wrong bits), a case of the wrong consumable in the wrong System, a bad trusted chip (generating bad pairs), or an attack on the Authentication Chip. A constant value of 0 is returned when the input parameters are wrong. The time taken for 0 to be returned must be the same for all bad inputs so that attackers can learn nothing about what was invalid. Once the input parameters have been verified the output values are calculated. The 256 bit content of M are transferred in the following order: bits 0-15 of M[0], bits 0-15 of M[1], through to bits 0-15 of M[15]. $F_{K2}[X \mid M]$ is calculated and output as bits 0-159. The R register is used to store the X value during the validation of the X, $F_{K1}[X]$ pair. This is because RND and RD are mutually exclusive. The RD command is implemented with the following steps:

Step	Action
1	IF (MinTicksRemaining ≠ 0 GOTO 1
2	MinTicksRemaining ← MinTicks
3	R ← Read 160 bits from client
4	Hash ← Calculate $F_{K1}[R]$
5	OK ← (Hash = next 160 bits from client) Note that this operation must take constant time so an attacker cannot determine how much of their guess is correct.

6	IF (OK)
	Output 256 bits of M to client
	ELSE
	Output 256 bits of 0 to client

7	Hash ← Calculate $F_{K2}[R \mid M]$

8	IF (OK)
	Output 160 bits of Hash to client
	ELSE
	Output 160 bits of 0 to client

RND – Random

Input: None

Output: R, $F_{K1}[R]$ = [160 bits, 160 bits]

Changes: None

The RND (Random) command is used by a client to obtain a valid R, $F_{K1}[R]$ pair for use in a subsequent authentication via the RD and TST commands. Since there are no input parameters, an RND command is therefore simply bits 0-2 of the RND opcode. The RND command can only be used when the following conditions have been met:

SIWritten = 1	indicating K_1 and R have been set up via the SSI command;
IsTrusted = 1	indicating the chip is permitted to generate random number sequences;

RND returns both R and $F_{K1}[R]$ to the caller. The 288-bit output of the RND command can be fed straight into the non-trusted chip's RD command as the input parameters. There is no need for the client to store them at all, since they are not required again. However the TST command will only succeed if the random number passed into the RD command was obtained first from the RND command. If a caller only calls RND multiple times, the same R, $F_{K1}[R]$ pair will be returned each time. R will only advance to the next random number in the sequence after a successful call to TST. See TST for more information. The RND command is implemented with the following steps:

Step	Action
1	Output 160 bits of R to client
2	Hash ← Calculate $F_{K1}[R]$
3	Output 160 bits of Hash to client

TST – Test

Input: X, $F_{K2}[R \mid X]$ = [256 bits, 160 bits]

Output: 1 or 0 = [1 bit]

Changes: M, R and MinTicksRemaining (or all registers if attack detected)

The TST (Test) command is used to authenticate a read of M from a non-trusted Authentication Chip. The TST (Test) command consists of the TST command opcode followed by input parameters: X and $F_{K2}[R \mid X]$. Since the Authentication Chip is serial, this must be transferred one bit at a time. The bit order is LSB to MSB for each command component. A TST command is therefore: bits 0-2 of the TST opcode, followed by bits 0-255 of M, bits 0-159 of $F_{K2}[R \mid M]$. 419 bits are transferred in total. Since the last 416 input bits are obtained as the output bits from a RD command to a non-trusted Authentication Chip, the entire data does not even have to be stored by the client. Instead, the bits can be passed directly to the trusted Authentication Chip's TST command. Only the 256 bits of M should be kept from a RD command. The TST command can only be used when the following conditions have been met:

SIWritten = 1	indicating K_2 and R have been set up via the SSI command;
IsTrusted = 1	indicating the chip is permitted to generate random number sequences;

In addition, calls to TST must wait for the MinTicksRemaining register to reach 0. Once it has done so, the register is reloaded with MinTicks to ensure that a minimum time will elapse between calls to TST. TST causes the internal M value to be replaced by the input M value. $F_{K2}[M \mid R]$ is then calculated, and compared against the 160 bit input hash value. A single output bit is produced: 1 if they are the same, and 0 if they are different. The use of the internal M value is to save space on chip, and is the reason why RD and TST are mutually exclusive commands. If the output bit is 1, R

is updated to be the next random number in the sequence. This forces the caller to use a new random number each time RD and TST are called. The resultant output bit is not output until the entire input string has been compared, so that the time to evaluate the comparison in the TST function is always the same. Thus no attacker can compare execution times or number of bits processed before an output is given.

The next random number is generated from R using a 160-bit maximal period LFSR (tap selections on bits 159, 4, 2, and 1). The initial 160-bit value for R is set up via the SSI command, and can be any random number except 0 (an LFSR filled with 0s will produce a never-ending stream of 0s). R is transformed by XORing bits 1, 2, 4, and 159 together, and shifting all 160 bits right 1 bit using the XOR result as the input bit to b_{159}. The new R will be returned on the next call to RND. Note that the time taken for 0 to be returned from TST must be the same for all bad inputs so that attackers can learn nothing about what was invalid about the input.

The TST command is implemented with the following steps:

Step	Action
1	IF (MinTicksRemaining ≠ 0 GOTO 1
2	MinTicksRemaining ← MinTicks
3	M ← Read 256 bits from client
4	IF (R = 0) GOTO CLR
5	Hash ← Calculate F_{K2}[R | M]
6	OK ← (Hash = next 160 bits from client) Note that this operation must take constant time so an attacker cannot determine how much of their guess is correct.
7	IF (OK) Temp ← R Erase R Advance TEMP via LFSR R ← TEMP
8	Output 1 bit of OK to client

Note that we can't simply advance R directly in Step 7 since R is Flash memory, and must be erased in order for any set bit to become 0. If power is removed from the Authentication Chip during Step 7 after erasing the old value of R, but before the new value for R has been written, then R will be erased but not reprogrammed. We therefore have the situation of IsTrusted=1, yet R=0, a situation only possible due to an attacker. Step 4 detects this event, and takes action if the attack is detected. This problem can be avoided by having a second 160-bit Flash register for R and a

Validity Bit, toggled after the new value has been loaded. It has not been included in this implementation for reasons of space, but if chip space allows it, an extra 160-bit Flash register would be useful for this purpose.

WR – Write

Input: M_{new} = [256 bits]

Output: None

Changes: M

A WR (Write) command is used to update the writeable parts of M containing Authentication Chip state data. The WR command by itself is not secure. It must be followed by an authenticated read of M (via a RD command) to ensure that the change was made as specified. The WR command is called by passing the WR command opcode followed by the new 256 bits of data to be written to M. Since the Authentication Chip is serial, the new value for M must be transferred one bit at a time. The bit order is LSB to MSB for each command component. A WR command is therefore: bits 0-2 of the WR opcode, followed by bits 0-15 of M[0], bits 0-15 of M[1], through to bits 0-15 of M[15]. 259 bits are transferred in total. The WR command can only be used when SIWritten = 1, indicating that K_1, K_2 and R have been set up via the SSI command (if SIWritten is 0, then K_1, K_2 and R have not been setup yet, and the CLR command is called instead). The ability to write to a specific M[n] is governed by the corresponding Access Mode bits as stored in the AccessMode register. The AccessMode bits can be set using the SAM command. When writing the new value to M[n] the fact that M[n] is Flash memory must be taken into account. All the bits of M[n] must be erased, and then the appropriate bits set. Since these two steps occur on different cycles, it leaves the possibility of attack open. An attacker can remove power after erasure, but before programming with the new value. However, there is no advantage to an attacker in doing this:

A Read/Write M[n] changed to 0 by this means is of no advantage since the attacker could have written any value using the WR command anyway.

A Read Only M[n] changed to 0 by this means allows an additional known text pair (where the M[n] is 0 instead of the original value). For future use M[n] values, they are already 0, so no information is given.

A Decrement Only M[n] changed to 0 simply speeds up the time in which the consumable is used up. It does not give any new information to an attacker that using the consumable would give.

The WR command is implemented with the following steps:

Step	Action
1	DecEncountered ← 0 EqEncountered ← 0 n ← 15
2	Temp ← Read 16 bits from client
3	AM = AccessMode[~n]
Compare to the previous value	
5	LT ← (Temp < M[~n]) [comparison is unsigned] EQ ← (Temp = M[~n])
6	WE ← (AM = RW) ∨ ((AM = MSR) ∧ LT) ∨ ((AM = NMSR) ∧ (DecEncountered ∨ LT))
7	DecEncountered ← ((AM = MSR) ∧ LT) ∨ ((AM = NMSR) ∧ DecEncountered) ∨ ((AM = NMSR) ∧ EqEncountered ∧ LT) EqEncountered ← ((AM = MSR) ∧ EQ) ∨ ((AM = NMSR) ∧ EqEncountered ∧ EQ)
Advance to the next Access Mode set and write the new M[~n] if applicable	
8	IF (WE) Erase M[~n] M[~n] ← Temp
10	⇓n
11	IF (n ≠ 0) GOTO 2

SAM – Set AccessMode

Input: $AccessMode_{new}$ = [32 bits]

Output: AccessMode = [32 bits]

Changes: AccessMode

The SAM (Set Access Mode) command is used to set the 32 bits of the AccessMode register, and is only available for

use in consumable Authentication Chips (where the IsTrusted flag = 0). The SAM command is called by passing the SAM command opcode followed by a 32-bit value that is used to set bits in the AccessMode register. Since the Authentication Chip is serial, the data must be transferred one bit at a time. The bit order is LSB to MSB for each command component. A SAM command is therefore: bits 0-2 of the SAM opcode, followed by bits 0-31 of bits to be set in AccessMode. 35 bits are transferred in total. The AccessMode register is only cleared to 0 upon execution of a CLR command. Since an access mode of 00 indicates an access mode of RW (read/write), not setting any AccessMode bits after a CLR means that all of M can be read from and written to. The SAM command only sets bits in the AccessMode register. Consequently a client can change the access mode bits for M[n] from RW to RO (read only) by setting the appropriate bits in a 32-bit word, and calling SAM with that 32-bit value as the input parameter. This allows the programming of the access mode bits at different times, perhaps at different stages of the manufacturing process. For example, the read only random data can be written to during the initial key programming stage, while allowing a second programming stage for items such as consumable serial numbers.

Since the SAM command only sets bits, the effect is to allow the access mode bits corresponding to M[n] to progress from RW to either MSR, NMSR, or RO. It should be noted that an access mode of MSR can be changed to RO, but this would not help an attacker, since the authentication of M after a write to a doctored Authentication Chip would detect that the write was not successful and hence abort the operation. The setting of bits corresponds to the way that Flash memory works best. The only way to clear bits in the AccessMode register, for example to change a Decrement Only M[n] to be Read/Write, is to use the CLR command. The CLR command not only erases (clears) the AccessMode register, but also clears the keys and all of M. Thus the AccessMode[n] bits corresponding to M[n] can only usefully be changed once between CLR commands. The SAM command returns the new value of the AccessMode register (after the appropriate bits have been set due to the input parameter). By calling SAM with an input parameter of 0, AccessMode will not be changed, and therefore the current value of AccessMode will be returned to the caller.

The SAM command is implemented with the following steps:

Step	Action
1	Temp ← Read 32 bits from client
2	SetBits(AccessMode, Temp)
3	Output 32 bits of AccessMode to client

GIT – Get Is Trusted

Input: None

Output: IsTrusted = [1 bit]

Changes: None

The GIT (Get Is Trusted) command is used to read the current value of the IsTrusted bit on the Authentication Chip. If the bit returned is 1, the Authentication Chip is a trusted System Authentication Chip. If the bit returned is 0, the Authentication Chip is a consumable Authentication Chip. A GIT command consists of simply the GIT command

opcode. Since the Authentication Chip is serial, this must be transferred one bit at a time. The bit order is LSB to MSB for each command component. A GIT command is therefore sent as bits 0-2 of the GIT opcode. A total of 3 bits are transferred. The GIT command is implemented with the following steps:

Step	Action
1	Output IsTrusted bit to client

SMT – Set MinTicks

Input: $MinTicks_{new}$ = [32 bits]

Output: None

Changes: MinTicks

The SMT (Set MinTicks) command is used to set bits in the MinTicks register and hence define the minimum number of ticks that must pass in between calls to TST and RD. The SMT command is called by passing the SMT command opcode followed by a 32-bit value that is used to set bits in the MinTicks register. Since the Authentication Chip is serial, the data must be transferred one bit at a time. The bit order is LSB to MSB for each command component. An SMT command is therefore: bits 0-2 of the SMT opcode, followed by bits 0-31 of bits to be set in MinTicks. 35 bits are transferred in total. The MinTicks register is only cleared to 0 upon execution of a CLR command. A value of 0 indicates that no ticks need to pass between calls to key-based functions. The functions may therefore be called as frequently as the clock speed limiting hardware allows the chip to run.

Since the SMT command only sets bits, the effect is to allow a client to set a value, and only increase the time delay if further calls are made. Setting a bit that is already set has no effect, and setting a bit that is clear only serves to slow the chip down further. The setting of bits corresponds to the way that Flash memory works best. The only way to clear bits in the MinTicks register, for example to change a value of 10 ticks to a value of 4 ticks, is to use the CLR command. However the CLR command clears the MinTicks register to 0 as well as clearing all keys and M. It is therefore useless for an attacker. Thus the MinTicks register can only usefully be changed once between CLR commands.

The SMT command is implemented with the following steps:

Step	Action
1	Temp ← Read 32 bits from client
2	SetBits(MinTicks, Temp)

Programming Authentication Chips

Authentication Chips must be programmed with logically secure information in a physically secure environment. Consequently the programming procedures cover both logical and physical security. Logical security is the process of

ensuring that K_1, K_2, R, and the random M[n] values are generated by a physically random process, and not by a computer. It is also the process of ensuring that the order in which parts of the chip are programmed is the most logically secure. Physical security is the process of ensuring that the programming station is physically secure, so that K_1 and K_2 remain secret, both during the key generation stage and during the lifetime of the storage of the keys. In addition, the programming station must be resistant to physical attempts to obtain or destroy the keys. The Authentication Chip has its own security mechanisms for ensuring that K_1 and K_2 are kept secret, but the Programming Station must also keep K_1 and K_2 safe.

Overview

After manufacture, an Authentication Chip must be programmed before it can be used. In all chips values for K_1 and K_2 must be established. If the chip is destined to be a System Authentication Chip, the initial value for R must be determined. If the chip is destined to be a consumable Authentication Chip, R must be set to 0, and initial values for M and AccessMode must be set up. The following stages are therefore identified:

Determine Interaction between Systems and Consumables

Determine Keys for Systems and Consumables

Determine MinTicks for Systems and Consumables

Program Keys, Random Seed, MinTicks and Unused M

Program State Data and Access Modes

Once the consumable or system is no longer required, the attached Authentication Chip can be reused. This is easily accomplished by reprogrammed the chip starting at Stage 4 again. Each of the stages is examined in the subsequent sections.

Stage 0: Manufacture

The manufacture of Authentication Chips does not require any special security. There is no secret information programmed into the chips at manufacturing stage. The algorithms and chip process is not special. Standard Flash processes are used. A theft of Authentication Chips between the chip manufacturer and programming station would only provide the clone manufacturer with blank chips. This merely compromises the sale of Authentication chips, not anything authenticated by Authentication Chips. Since the programming station is the only mechanism with consumable and system product keys, a clone manufacturer would not be able to program the chips with the correct key. Clone manufacturers would be able to program the blank chips for their own systems and consumables, but it would be difficult to place these items on the market without detection. In addition, a single theft would be difficult to base a business around.

Stage 1: Determine Interaction between Systems and Consumables

The decision of what is a System and what is a Consumable needs to be determined before any Authentication Chips can be programmed. A decision needs to be made about which Consumables can be used in which Systems, since all connected Systems and Consumables must share the same key information. They also need to share state-data usage mechanisms even if some of the interpretations of that data have not yet been determined. A simple example is that of a car and car-keys. The car itself is the System, and the car-keys are the consumables. There are several car-keys for each car, each containing the same key information as the specific car. However each car (System) would contain a different key (shared by its car-keys), since we don't want car-keys from one car working in another. Another example

is that of a photocopier that requires a particular toner cartridge. In simple terms the photocopier is the System, and the toner cartridge is the consumable. However the decision must be made as to what compatibility there is to be between cartridges and photocopiers. The decision has historically been made in terms of the physical packaging of the toner cartridge: certain cartridges will or won't fit in a new model photocopier based on the design decisions for that copier. When Authentication Chips are used, the components that must work together must share the same key information.

In addition, each type of consumable requires a different way of dividing M (the state data). Although the way in which M is used will vary from application to application, the method of allocating M[n] and AccessMode[n] will be the same:

Define the consumable state data for specific use

Set some M[n] registers aside for future use (if required). Set these to be 0 and Read Only. The value can be tested for in Systems to maintain compatibility.

Set the remaining M[n] registers (at least one, but it does not have to be M[15]) to be Read Only, with the contents of each M[n] completely random. This is to make it more difficult for a clone manufacturer to attack the authentication keys.

The following examples show ways in which the state data may be organized.

Example 1

Suppose we have a car with associated car-keys. A 16-bit key number is more than enough to uniquely identify each car-key for a given car. The 256 bits of M could be divided up as follows:

M[n]	Access	Description
0	RO	Key number (16 bits)
1-4	RO	Car engine number (64 bits)
5-8	RO	For future expansion = 0 (64 bits)
8-15	RO	Random bit data (128 bits)

If the car manufacturer keeps all logical keys for all cars, it is a trivial matter to manufacture a new physical car-key for a given car should one be lost. The new car-key would contain a new Key Number in M[0], but have the same K_1 and K_2 as the car's Authentication Chip. Car Systems could allow specific key numbers to be invalidated (for example if a key is lost). Such a system might require Key 0 (the master key) to be inserted first, then all valid keys, then Key 0 again. Only those valid keys would now work with the car. In the worst case, for example if all car-keys are lost, then a new set of logical keys could be generated for the car and its associated physical car-keys if desired. The Car engine number would be used to tie the key to the particular car. Future use data may include such things as rental information, such as driver/renter details.

Example 2

Suppose we have a photocopier image unit which should be replaced every 100,000 copies. 32 bits are required to store the number of pages remaining. The 256 bits of M could be divided up as follows:

M[n]	Access	Description

0	RO	Serial number (16 bits)
1	RO	Batch number (16 bits)
2	MSR	Page Count Remaining (32 bits, hi/lo)
3	NMSR	
4-7	RO	For future expansion = 0 (64 bits)
8-15	RO	Random bit data (128 bits)

If a lower quality image unit is made that must be replaced after only 10,000 copies, the 32-bit page count can still be used for compatibility with existing photocopiers. This allows several consumable types to be used with the same system.

Example 3

Consider a Polaroid camera consumable containing 25 photos. A 16-bit countdown is all that is required to store the number of photos remaining. The 256 bits of M could be divided up as follows:

M[n]	Access	Description
0	RO	Serial number (16 bits)
1	RO	Batch number (16 bits)
2	MSR	Photos Remaining (16 bits)
3-6	RO	For future expansion = 0 (64 bits)
7-15	RO	Random bit data (144 bits)

The Photos Remaining value at M[2] allows a number of consumable types to be built for use with the same camera System. For example, a new consumable with 36 photos is trivial to program. Suppose 2 years after the introduction of the camera, a new type of camera was introduced. It is able to use the old consumable, but also can process a new film type. M[3] can be used to define Film Type. Old film types would be 0, and the new film types would be some new value. New Systems can take advantage of this. Original systems would detect a non-zero value at M[3] and realize incompatibility with new film types. New Systems would understand the value of M[3] and so react appropriately. To maintain compatibility with the old consumable, the new consumable and System needs to have the same key information as the old one. To make a clean break with a new System and its own special consumables, a new key set would be required.

Example 4

Consider a printer consumable containing 3 inks: cyan, magenta, and yellow. Each ink amount can be decremented separately. The 256 bits of M could be divided up as follows:

M[n]	Access	Description
0	RO	Serial number (16 bits)
1	RO	Batch number (16 bits)
2	MSR	Cyan Remaining (32 bits, hi/lo)
3	NMSR	
4	MSR	Magenta Remaining (32 bits, hi/lo)
5	NMSR	
6	MSR	Yellow Remaining (32 bits, hi/lo)
7	NMSR	
8-11	RO	For future expansion = 0 (64 bits)
12-15	RO	Random bit data (64 bits)

Stage 2: Determine Keys for Systems and Consumables

Once the decision has been made as to which Systems and consumables are to share the same keys, those keys must be defined. The values for K_1 and K_2 must therefore be determined. In most cases, K_1 and K_2 will be generated once for all time. All Systems and consumables that have to work together (both now and in the future) need to have the same K_1 and K_2 values. K_1 and K_2 must therefore be kept secret since the entire security mechanism for the System/Consumable combination is made void if the keys are compromised. If the keys are compromised, the damage depends on the number of systems and consumables, and the ease to which they can be reprogrammed with new non-compromised keys: In the case of a photocopier with toner cartridges, the worst case is that a clone manufacturer could then manufacture their own Authentication Chips (or worse, buy them), program the chips with the known keys, and then insert them into their own consumables. In the case of a car with car-keys, each car has a different set of keys. This leads to two possible general scenarios. The first is that after the car and car-keys are programmed with the keys, K_1 and K_2 are deleted so no record of their values are kept, meaning that there is no way to compromise K_1 and K_2. However no more car-keys can be made for that car without reprogramming the car's Authentication Chip. The second scenario is that the car manufacturer keeps K_1 and K_2, and new keys can be made for the car. A compromise of K_1 and K_2 means that someone could make a car-key specifically for a particular car.

The keys and random data used in the Authentication Chips must therefore be generated by a means that is non-deterministic (a completely computer generated pseudo-random number cannot be used because it is deterministic – knowledge of the generator's seed gives all future numbers). K_1 and K_2 should be generated by a physically random process, and not by a computer. However, random bit generators based on natural sources of randomness are subject to influence by external factors and also to malfunction. It is imperative that such devices be tested periodically for statistical randomness.

A simple yet useful source of random numbers is the **Lavarand ®** system from SGI. This generator uses a digital camera to photograph six lava lamps every few minutes. Lava lamps contain chaotic turbulent systems. The resultant digital images are fed into an SHA-1 implementation that produces a 7-way hash, resulting in a 160-bit value from

every 7th bye from the digitized image. These 7 sets of 160 bits total 140 bytes. The 140 byte value is fed into a BBS generator to position the start of the output bitstream. The output 160 bits from the BBS would be the key or the Authentication chip 53.

An extreme example of a non-deterministic random process is someone flipping a coin 160 times for K_1 and 160 times for K_2 in a clean room. With each head or tail, a 1 or 0 is entered on a panel of a Key Programmer Device. The process must be undertaken with several observers (for verification) in silence (someone may have a hidden microphone). The point to be made is that secure data entry and storage is not as simple as it sounds. The physical security of the Key Programmer Device and accompanying Programming Station requires an entire document of its own. Once keys K_1 and K_2 have been determined, they must be kept for as long as Authentication Chips need to be made that use the key. In the first car/car-key scenario K_1 and K_2 are destroyed after a single System chip and a few consumable chips have been programmed. In the case of the photocopier / toner cartridge, K_1 and K_2 must be retained for as long as the toner-cartridges are being made for the photocopiers. The keys must be kept securely.

Stage 3: Determine MinTicks for Systems and Consumables

The value of MinTicks depends on the operating clock speed of the Authentication Chip (System specific) and the notion of what constitutes a reasonable time between RD or TST function calls (application specific). The duration of a single tick depends on the operating clock speed. This is the maximum of the input clock speed and the Authentication Chip's clock-limiting hardware. For example, the Authentication Chip's clock-limiting hardware may be set at 10 MHz (it is not changeable), but the input clock is 1 MHz. In this case, the value of 1 tick is based on 1 MHz, not 10 MHz. If the input clock was 20 MHz instead of 1 MHz, the value of 1 tick is based on 10 MHz (since the clock speed is limited to 10 MHz). Once the duration of a tick is known, the MinTicks value can be set. The value for MinTicks is the minimum number of ticks required to pass between calls to RD or RND key-based functions. Suppose the input clock speed matches the maximum clock speed of 10 MHz. If we want a minimum of 1 second between calls to TST, the value for MinTicks is set to 10,000,000. Even a value such as 2 seconds might be a completely reasonable value for a System such as a printer (one authentication per page, and one page produced every 2 or 3 seconds).

Stage 4: Program Keys, Random Seed, MinTicks and Unused M

Authentication Chips are in an unknown state after manufacture. Alternatively, they have already been used in one consumable, and must be reprogrammed for use in another. Each Authentication Chip must be cleared and programmed with new keys and new state data. Clearing and subsequent programming of Authentication Chips must take place in a secure Programming Station environment.

Programming a Trusted System Authentication Chip

If the chip is to be a trusted System chip, a seed value for R must be generated. It must be a random number derived from a physically random process, and must not be 0. The following tasks must be undertaken, in the following order, and in a secure programming environment:

RESET the chip

CLR[]

Load R (160 bit register) with physically random data

SSI[K_1, K_2, R]

SMT[$MinTicks_{System}$]

The Authentication Chip is now ready for insertion into a System. It has been completely programmed. If the System Authentication Chips are stolen at this point, a clone manufacturer could use them to generate R, $F_{K1}[R]$ pairs in order to launch a known text attack on K_1, or to use for launching a partially chosen-text attack on K_2. This is no different to the purchase of a number of Systems, each containing a trusted Authentication Chip. The security relies on the strength of the Authentication protocols and the randomness of K_1 and K_2.

Programming a Non-Trusted Consumable Authentication Chip

If the chip is to be a non-trusted Consumable Authentication Chip, the programming is slightly different to that of the trusted System Authentication Chip. Firstly, the seed value for R must be 0. It must have additional programming for M and the AccessMode values. The future use M[n] must be programmed with 0, and the random M[n] must be programmed with random data. The following tasks must be undertaken, in the following order, and in a secure programming environment:

RESET the chip

CLR[]

Load R (160 bit register) with 0

SSI[K_1, K_2, R]

Load X (256 bit register) with 0

Set bits in X corresponding to appropriate M[n] with physically random data

WR[X]

Load Y (32 bit register) with 0

Set bits in Y corresponding to appropriate M[n] with Read Only Access Modes

SAM[Y]

SMT[$MinTicks_{Consumable}$]

The non-trusted consumable chip is now ready to be programmed with the general state data. If the Authentication Chips are stolen at this point, an attacker could perform a limited chosen text attack. In the best situation, parts of M are Read Only (0 and random data), with the remainder of M completely chosen by an attacker (via the WR command). A number of RD calls by an attacker obtains $F_{K2}[M|R]$ for a limited M. In the worst situation, M can be completely chosen by an attacker (since all 256 bits are used for state data). In both cases however, the attacker cannot choose any value for R since it is supplied by calls to RND from a System Authentication Chip. The only way to obtain a chosen R is by a Brute Force attack. It should be noted that if Stages 4 and 5 are carried out on the same Programming Station (the preferred and ideal situation), Authentication Chips cannot be removed in between the stages. Hence there is no possibility of the Authentication Chips being stolen at this point. The decision to program the Authentication Chips at one or two times depends on the requirements of the System/Consumable manufacturer.

Stage 5: Program State Data and Access Modes

This stage is only required for consumable Authentication Chips, since M and AccessMode registers cannot be altered on System Authentication Chips. The future use and random values of M[n] have already been programmed in Stage 4. The remaining state data values need to be programmed and the associated Access Mode values need to be set. Bear in mind that the speed of this stage will be limited by the value stored in the MinTicks register. This stage is separated

from Stage 4 on account of the differences either in physical location or in time between where/when Stage 4 is performed, and where/when Stage 5 is performed. Ideally, Stages 4 and 5 are performed at the same time in the same Programming Station. Stage 4 produces valid Authentication Chips, but does not load them with initial state values (other than 0). This is to allow the programming of the chips to coincide with production line runs of consumables. Although Stage 5 can be run multiple times, each time setting a different state data value and Access Mode value, it is more likely to be run a single time, setting all the remaining state data values and setting all the remaining Access Mode values. For example, a production line can be set up where the batch number and serial number of the Authentication Chip is produced according to the physical consumable being produced. This is much harder to match if the state data is loaded at a physically different factory.

The Stage 5 process involves first checking to ensure the chip is a valid consumable chip, which includes a RD to gather the data from the Authentication Chip, followed by a WR of the initial data values, and then a SAM to permanently set the new data values. The steps are outlined here:

IsTrusted = GIT[]
If (IsTrusted), exit with error (wrong kind of chip!)
Call RND on a valid System chip to get a valid input pair
Call RD on chip to be programmed, passing in valid input pair
Load X (256 bit register) with results from a RD of Authentication Chip
Call TST on valid System chip to ensure X and consumable chip are valid
If (TST returns 0), exit with error (wrong consumable chip for system)
Set bits of X to initial state values
WR[X]
Load Y (32 bit register) with 0
Set bits of Y corresponding to Access Modes for new state values
SAM[Y]

Of course the validation (Steps 1 to 7) does not have to occur if Stage 4 and 5 follow on from one another on the same Programming Station. But it should occur in all other situations where Stage 5 is run as a separate programming process from Stage 4. If these Authentication Chips are now stolen, they are already programmed for use in a particular consumable. An attacker could place the stolen chips into a clone consumable. Such a theft would limit the number of cloned products to the number of chips stolen. A single theft should not create a supply constant enough to provide clone manufacturers with a cost-effective business. The alternative use for the chips is to save the attacker from purchasing the same number of consumables, each with an Authentication Chip, in order to launch a partially chosen text attack or brute force attack. There is no special security breach of the keys if such an attack were to occur.

Manufacture

The circuitry of the Authentication Chip must be resistant to physical attack. A summary of manufacturing implementation guidelines is presented, followed by specification of the chip's physical defenses (ordered by attack).

Guidelines for Manufacturing

The following are general guidelines for implementation of an Authentication Chip in terms of manufacture:

Standard process
Minimum size (if possible)

DEMANDES OU BREVETS VOLUMINEUX

LA PRÉSENTE PARTIE DE CETTE DEMANDE OU CE BREVETS COMPREND PLUS D'UN TOME.

CECI EST LE TOME __1___ DE __2___

NOTE: Pour les tomes additionels, veillez contacter le Bureau Canadien des Brevets.

JUMBO APPLICATIONS / PATENTS

THIS SECTION OF THE APPLICATION / PATENT CONTAINS MORE THAN ONE VOLUME.

THIS IS VOLUME __1___ OF __2___

NOTE: For additional volumes please contact the Canadian Patent Office.

We claim:

1. A portable camera with integral printer device, said camera including:

(a) a digital image capture device for the capturing of digital images;

(b) an integral programming language interpreter means connected to said digital image capture means for the manipulation of said digital image;

(c) a script input means for inputting a program script for the manipulation of said digital image;

herein said script is executed by said interpreter means so as to modify said image in accordance with said script so to provide a printout of a modified image on said integral printer.

2. A portable camera as claimed in claim 1 wherein said script input means comprises a script stored on a card and a card reader for the reading of said scripts from said card.

3. A portable camera as claimed in claim 2 where it said cards have, on one surface, an encoded form of the said script and, on a second surface, have an example of the likely effect of said script on an image.

4. A portable camera claimed in claim 1 where said programming language includes language constructs for the implementation of at least one of image warping, convolution, color lookup tables, posterizing images, adding noises to images, image enhancement, image painting algorithms including brush jittering and tiling, edge detection, image illumination, text and fonts, face detection, and the utilization of arbitrary complexity pre-rendered graphical objects.

Application number / numéro de demande: 2596584

Figures: 48, 49 to 55, 57, 62, 67, 73 & 177

Pages: 32, 33 to 38, 41, 44, & 106

Unscannable item(s)
received with this application
To inquire if you can order a copy of the unscannable items, please visit the CIPO WebSite at HTTP://CIPO.GC.CA

Item(s) ne pouvant être balayés
Documents reçus avec cette demande ne pouvant être balayés.
Pour vous renseigner si vous pouvez commander une copie des items ne pouvant être balayés, veuillez visiter le site web de l'OPIC au HTTP://CIPO.GC.

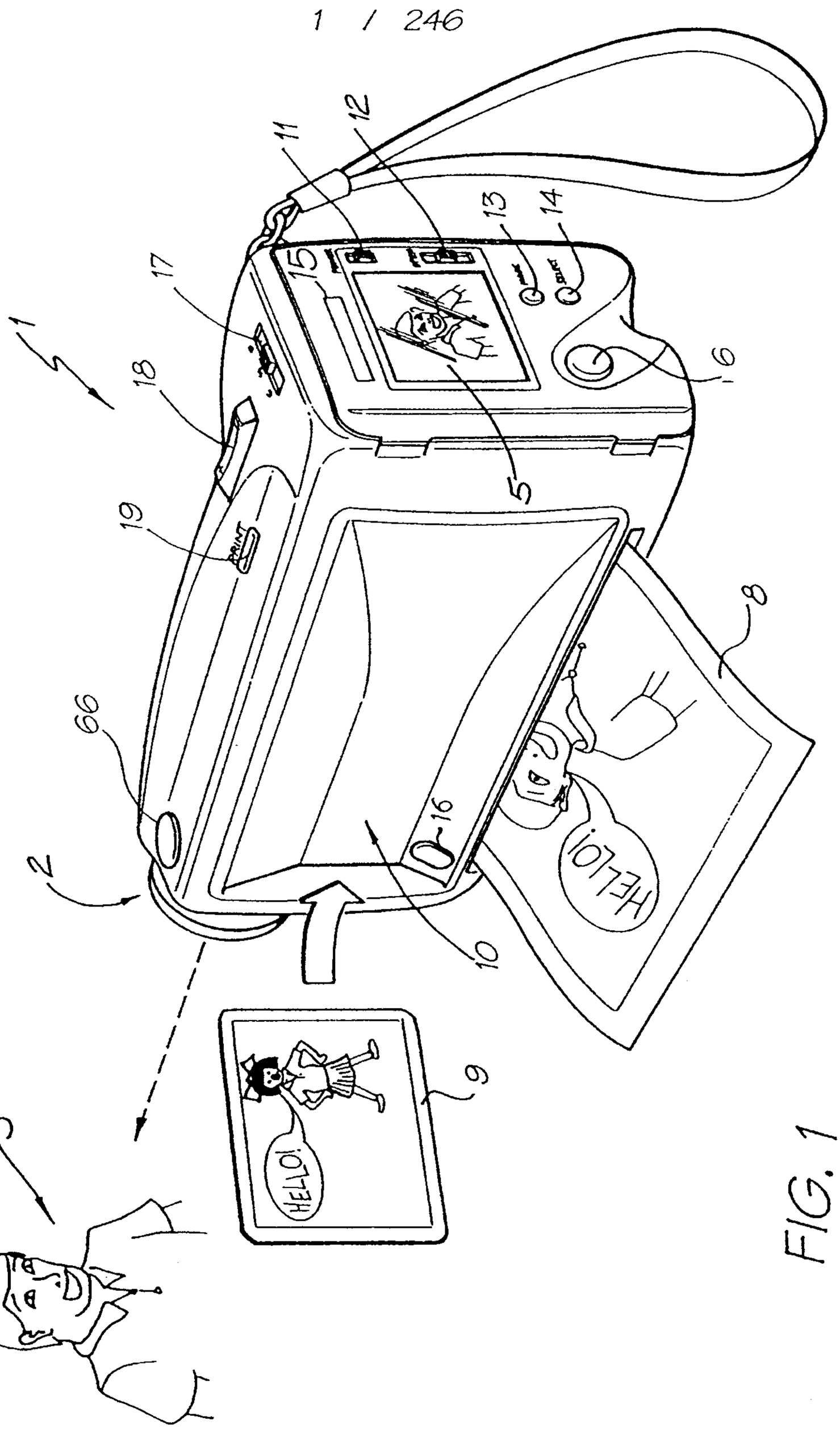

FIG. 1

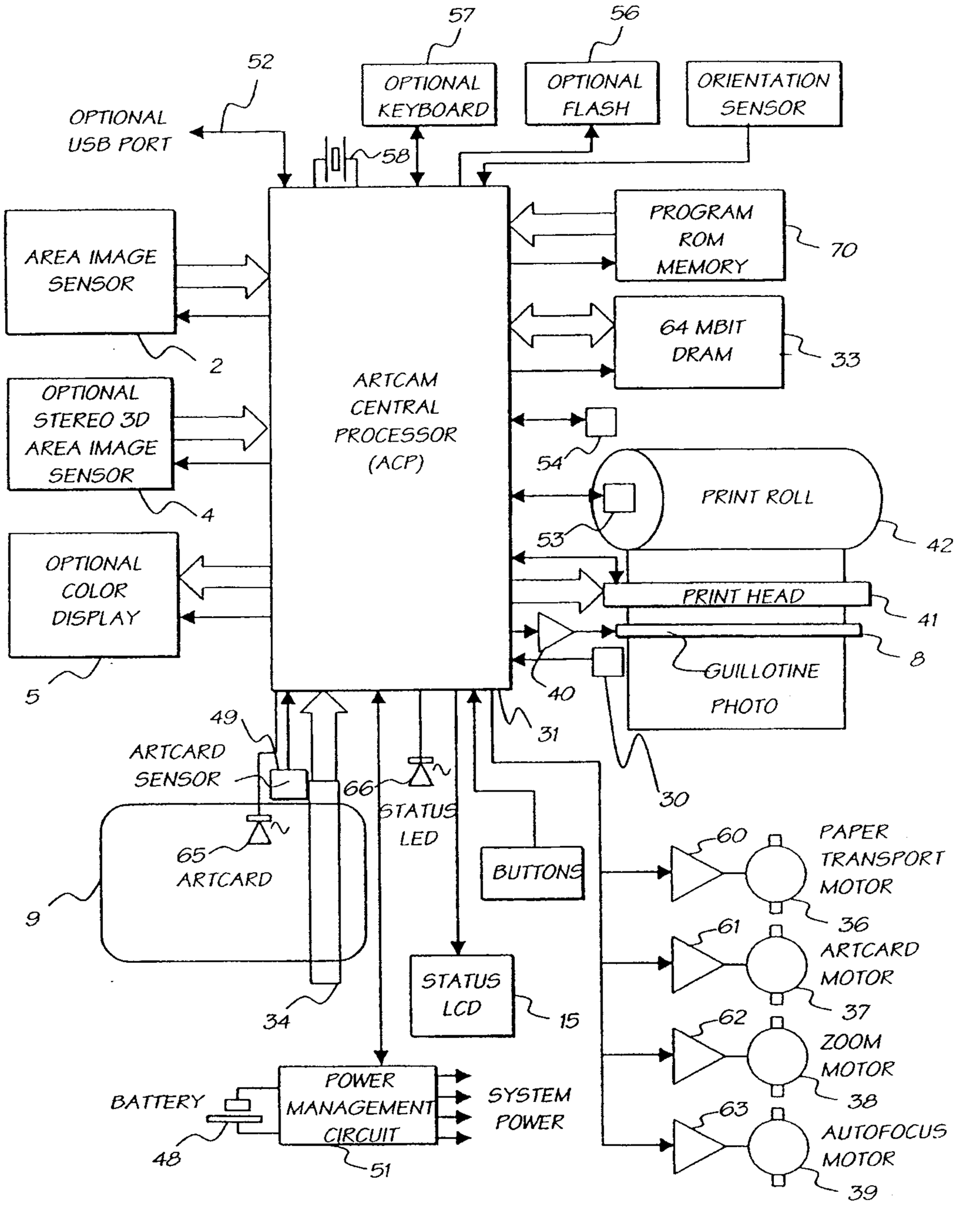
57
56
52
OPTIONAL KEYBOARD
OPTIONAL FLASH
ORIENTATION SENSOR
OPTIONAL USB PORT
58
AREA IMAGE SENSOR
2
ARTCAM CENTRAL PROCESSOR (ACP)
PROGRAM ROM MEMORY
70
64 MBIT DRAM
33
OPTIONAL STEREO 3D AREA IMAGE SENSOR
4
54
PRINT ROLL
42
53
OPTIONAL COLOR DISPLAY
5
PRINT HEAD
41
8
GUILLOTINE PHOTO
40
49
31
ARTCARD SENSOR
66
STATUS LED
30
65 ARTCARD
9
BUTTONS
60
PAPER TRANSPORT MOTOR
36
61
ARTCARD MOTOR
37
34
STATUS LCD
15
62
ZOOM MOTOR
38
POWER MANAGEMENT CIRCUIT
BATTERY
SYSTEM POWER
48
51
63
AUTOFOCUS MOTOR
39

FIG. 2

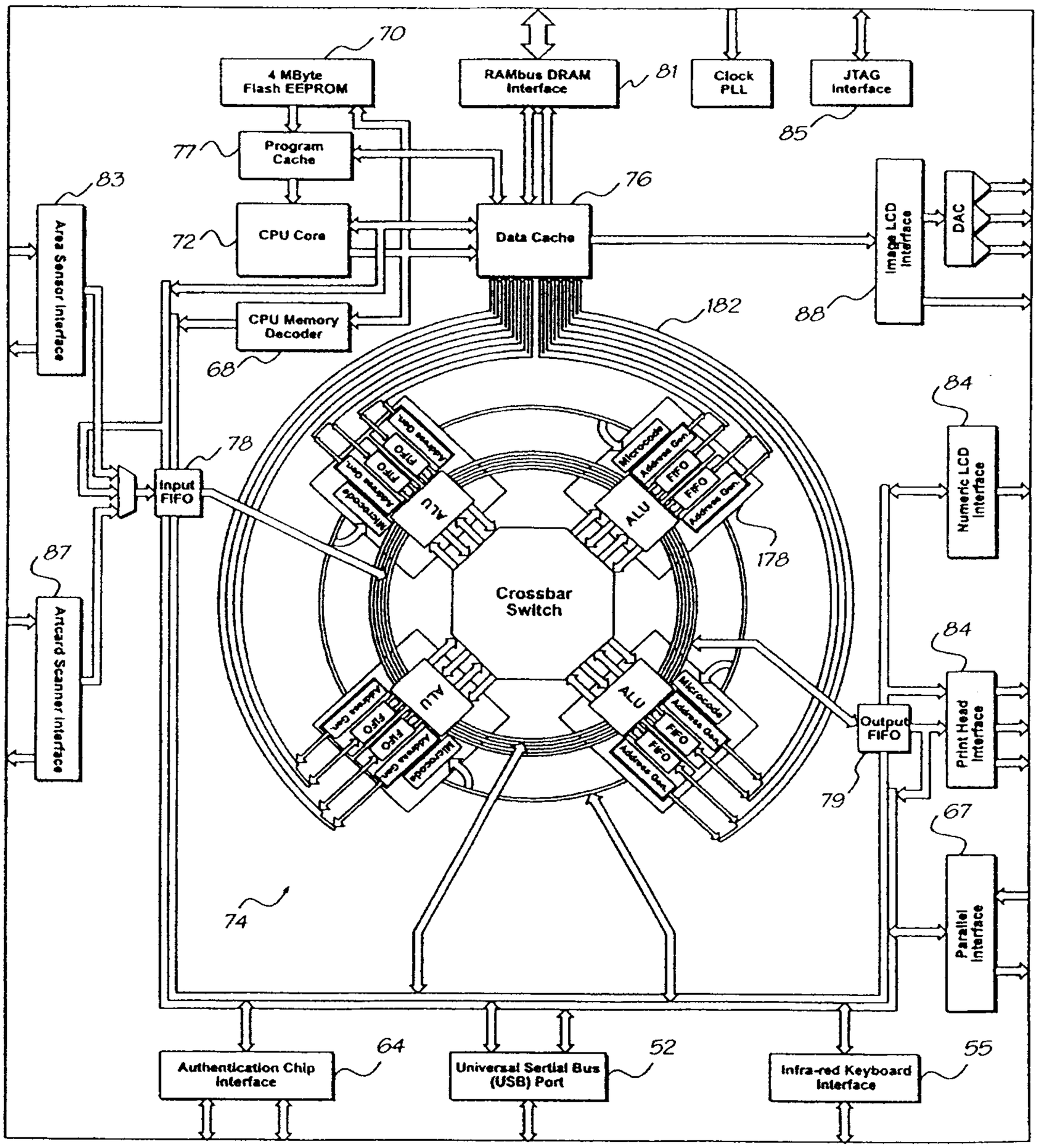
70
4 MByte Flash EEPROM
RAMbus DRAM Interface
81
Clock PLL
JTAG Interface
85
77
Program Cache
83
Area Sensor Interface
72
CPU Core
76
Data Cache
Image LCD Interface
DAC
88
182
CPU Memory Decoder
68
84
78
Input FIFO
Microcode
Address Gen.
FIFO
ALU
178
87
Crossbar Switch
Numeric LCD Interface
Artcard Scanner Interface
Output FIFO
Print Head Interface
79
67
74
Parallel Interface
64
Authentication Chip Interface
52
Universal Serial Bus (USB) Port
55
Infra-red Keyboard Interface

31

FIG. 3

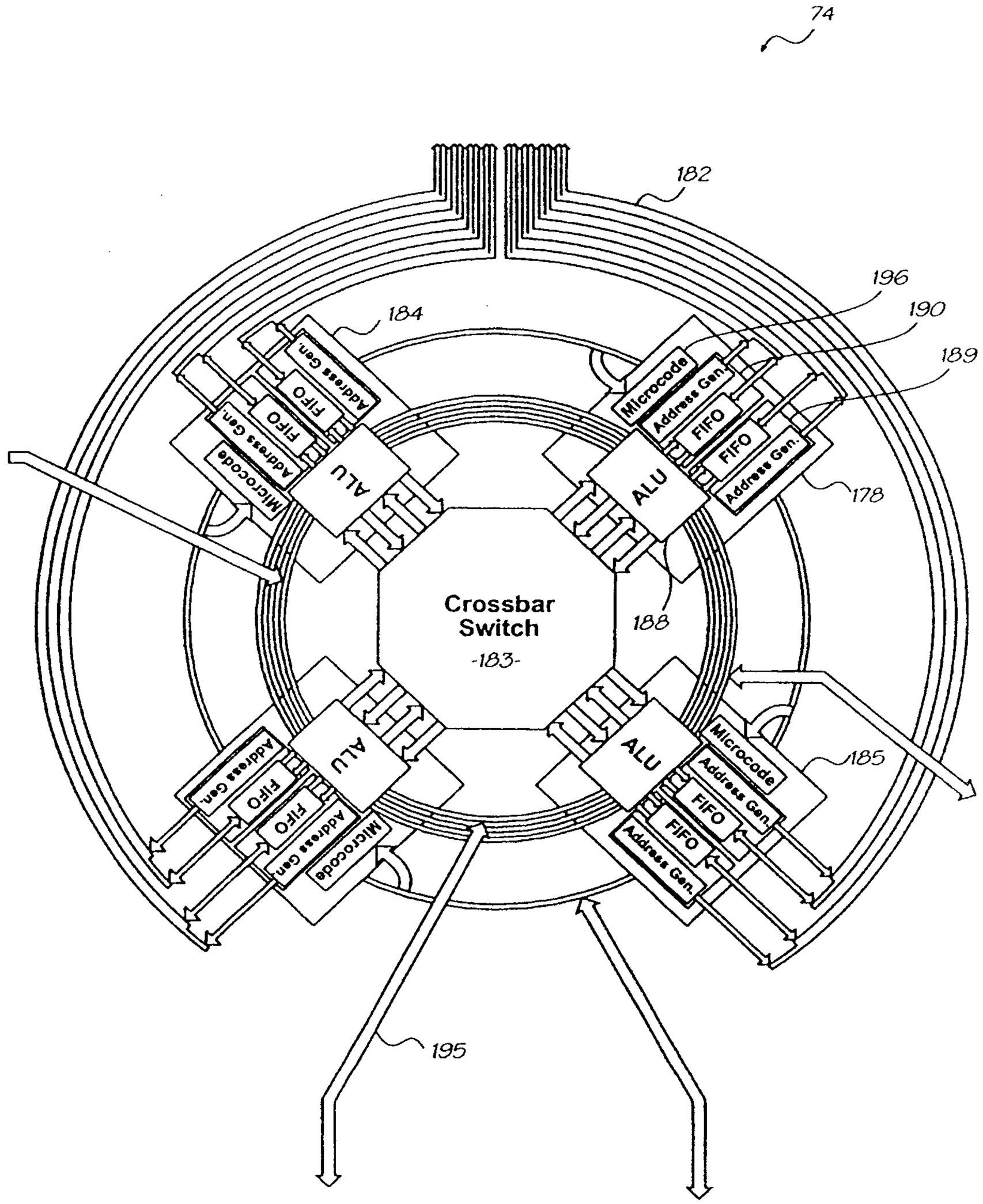
74
182
196
190
189
184
178
188
185
195
Crossbar Switch
-183-
ALU
Microcode
Address Gen.
FIFO
FIFO
Address Gen.

FIG. 3(a)

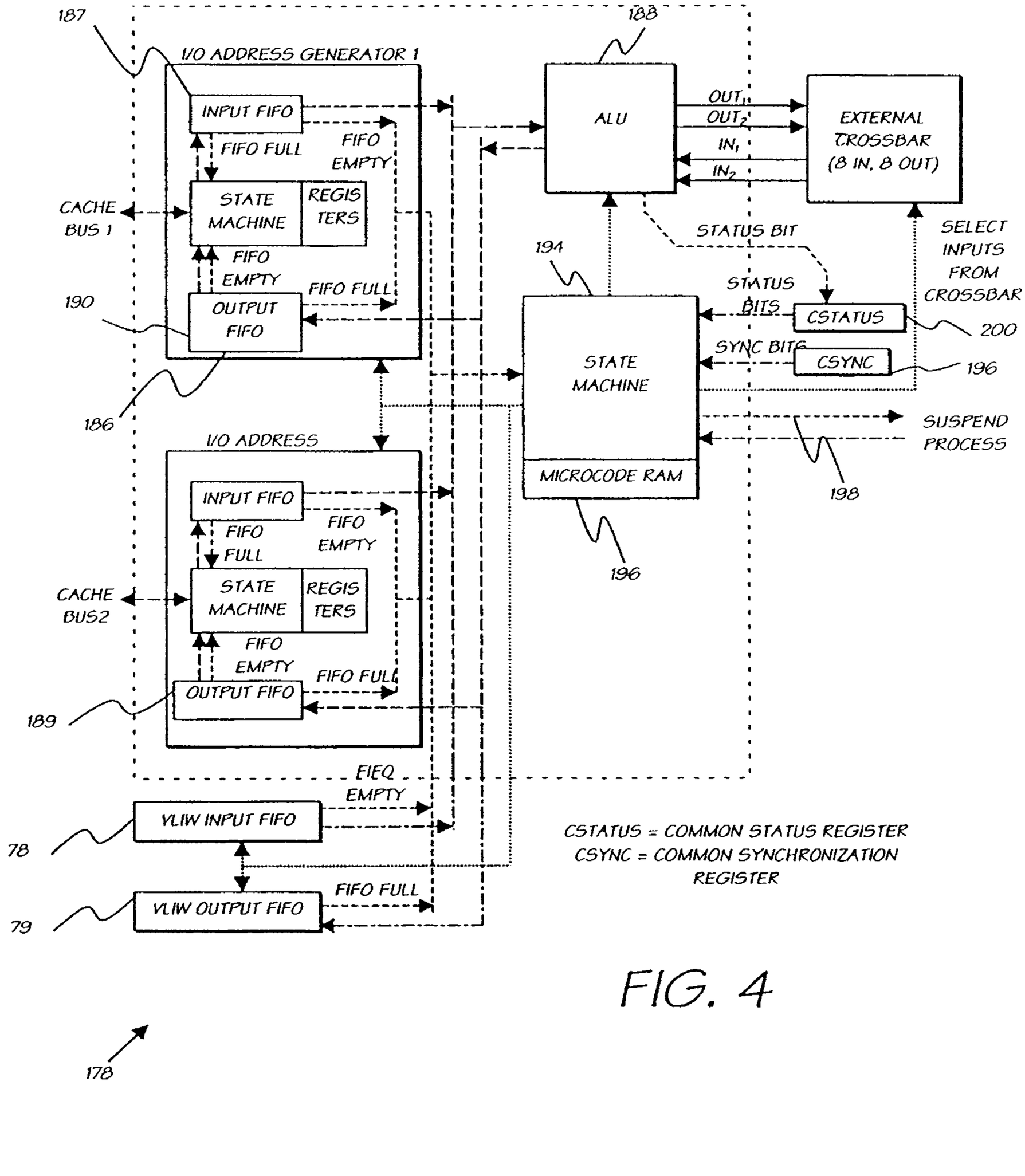
187
188
I/O ADDRESS GENERATOR 1
INPUT FIFO
FIFO FULL
FIFO EMPTY
CACHE BUS 1
STATE MACHINE
REGISTERS
FIFO EMPTY
FIFO FULL
190
OUTPUT FIFO
186
ALU
OUT1
OUT2
IN1
IN2
EXTERNAL CROSSBAR (8 IN, 8 OUT)
STATUS BIT
SELECT INPUTS FROM CROSSBAR
194
STATUS BITS
CSTATUS
200
SYNC BITS
CSYNC
196
STATE MACHINE
SUSPEND PROCESS
MICROCODE RAM
198
196
I/O ADDRESS
INPUT FIFO
FIFO FULL
FIFO EMPTY
CACHE BUS2
STATE MACHINE
REGISTERS
FIFO EMPTY
FIFO FULL
OUTPUT FIFO
189
FIEQ EMPTY
VLIW INPUT FIFO
78
VLIW OUTPUT FIFO
79
FIFO FULL
CSTATUS = COMMON STATUS REGISTER
CSYNC = COMMON SYNCHRONIZATION REGISTER
178

FIG. 4

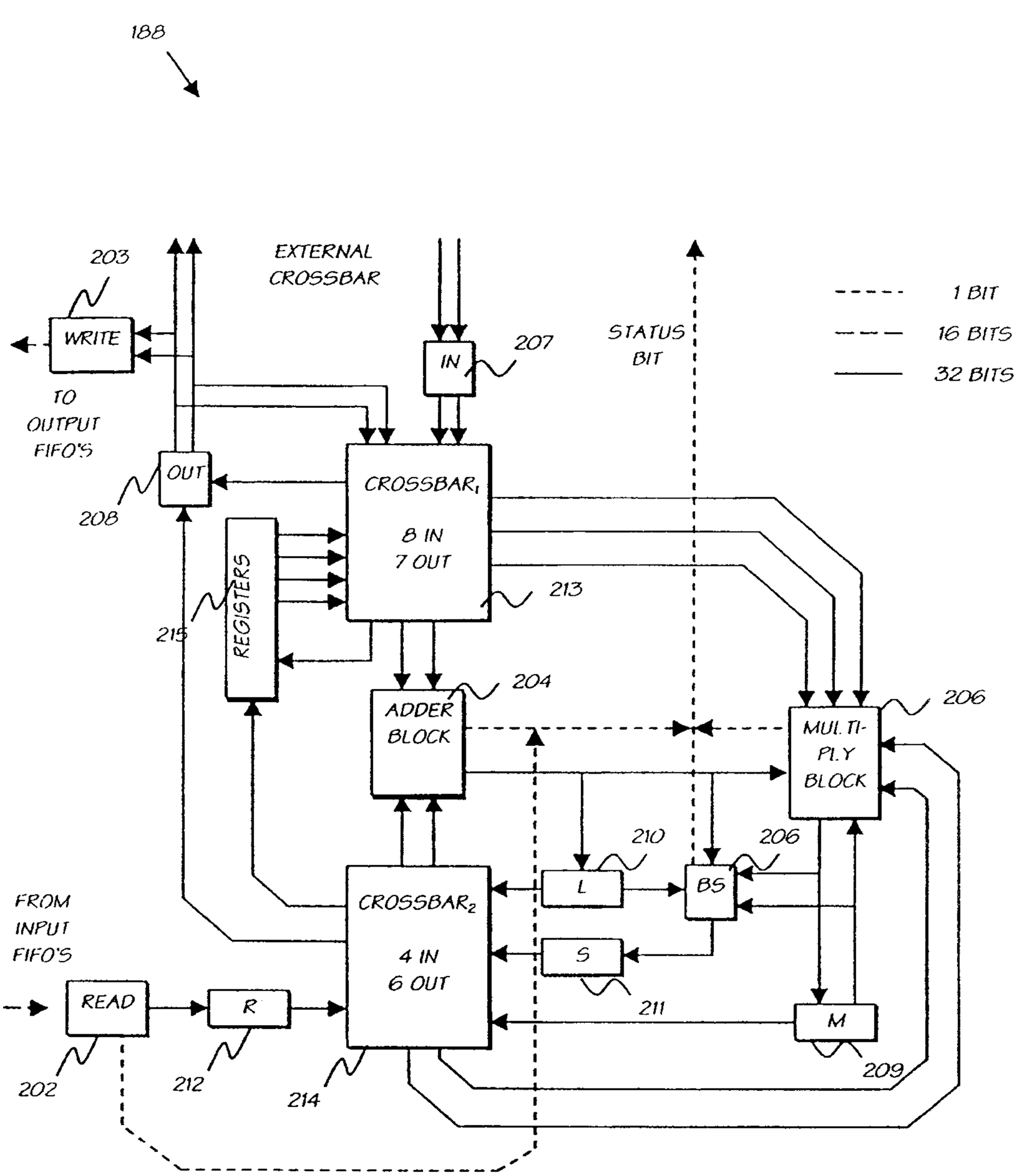
188
203
WRITE
TO OUTPUT FIFO'S
EXTERNAL CROSSBAR
IN
207
STATUS BIT
1 BIT
16 BITS
32 BITS
OUT
208
CROSSBAR1
8 IN
7 OUT
213
REGISTERS
215
204
ADDER BLOCK
206
MULTI-PLY BLOCK
210
206
L
BS
CROSSBAR2
4 IN
6 OUT
S
211
M
209
FROM INPUT FIFO'S
READ
R
202
212
214

FIG. 5

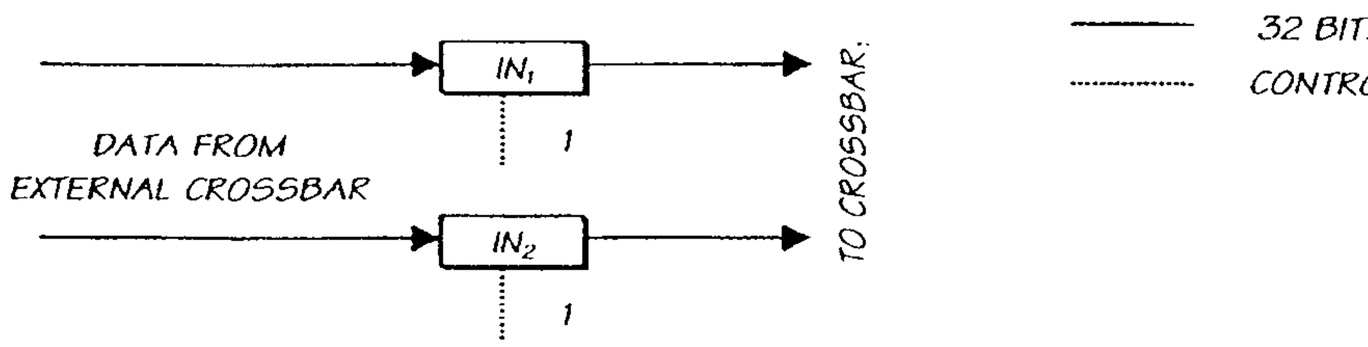
DATA FROM
EXTERNAL CROSSBAR
IN1
IN2
1
1
TO CROSSBAR
32 BITS
CONTROL

FIG. 6

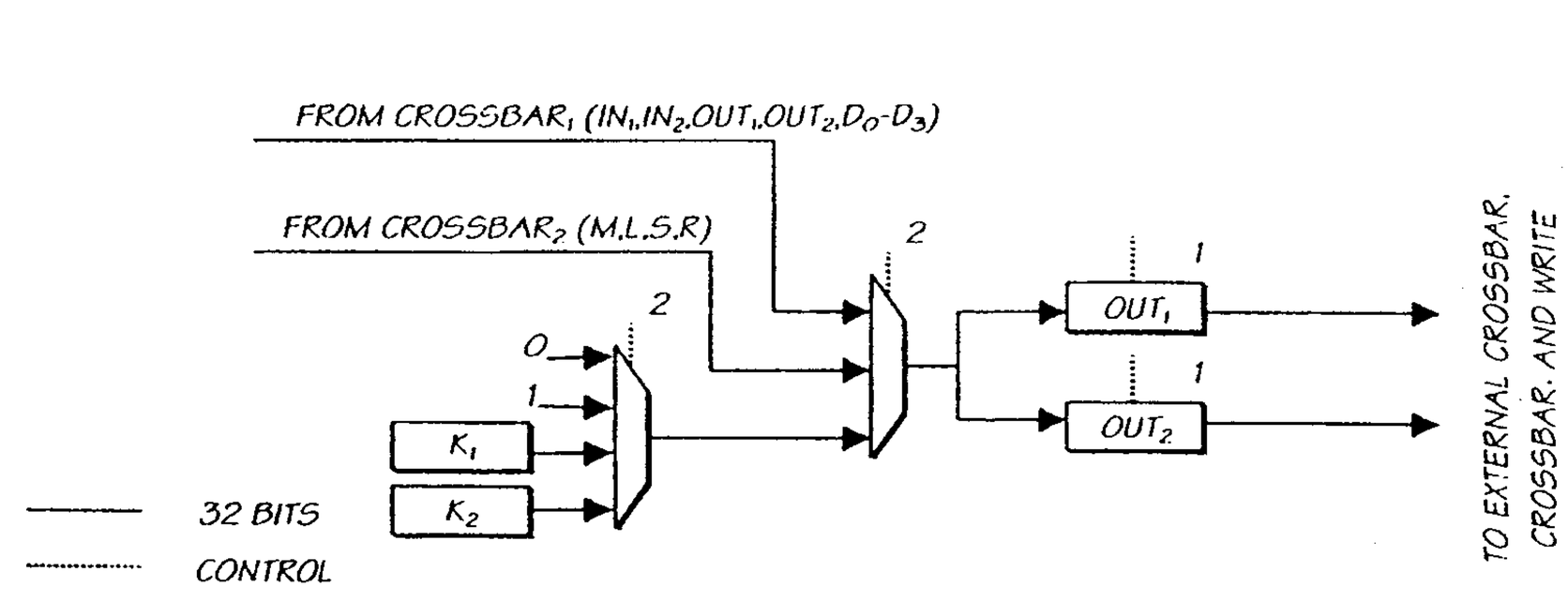
FROM CROSSBAR1 (IN1,IN2,OUT1,OUT2,D0-D3)
FROM CROSSBAR2 (M,L,S,R)
2
2
0
1
K1
K2
OUT1
OUT2
1
1
TO EXTERNAL CROSSBAR, CROSSBAR, AND WRITE
32 BITS
CONTROL

FIG. 7

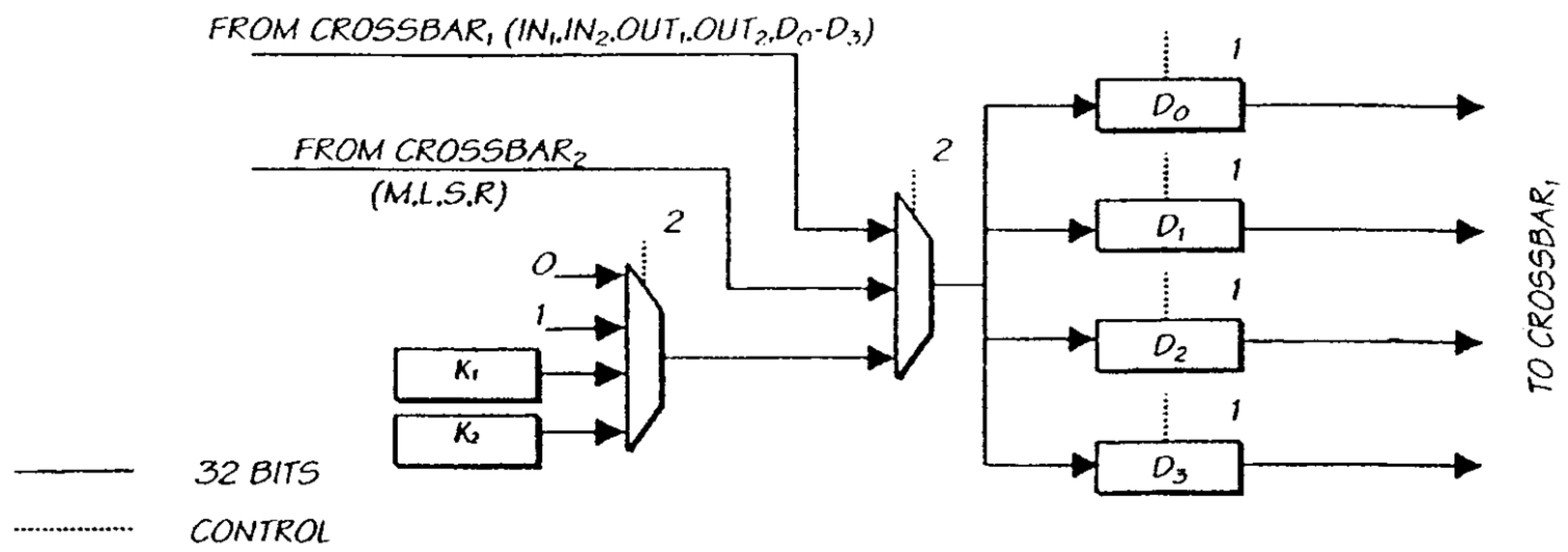
FROM CROSSBAR1 (IN1.IN2.OUT1.OUT2.D0-D3)
FROM CROSSBAR2
(M.L.S.R)
2
0
1
K1
K2
2
1
D0
D1
D2
D3
TO CROSSBAR1
32 BITS
CONTROL

FIG. 8

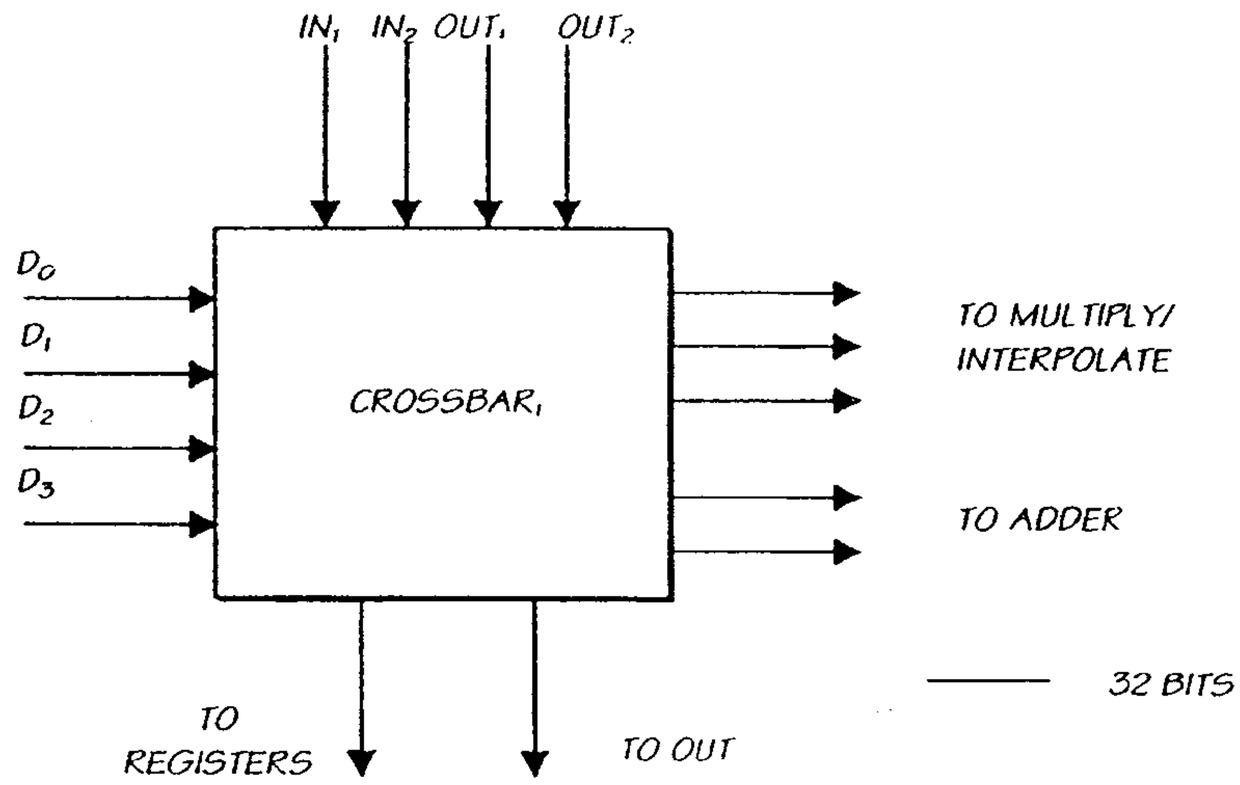
IN1
IN2
OUT1
OUT2
D0
D1
D2
D3
CROSSBAR1
TO MULTIPLY/
INTERPOLATE
TO ADDER
32 BITS
TO
REGISTERS
TO OUT

FIG. 9

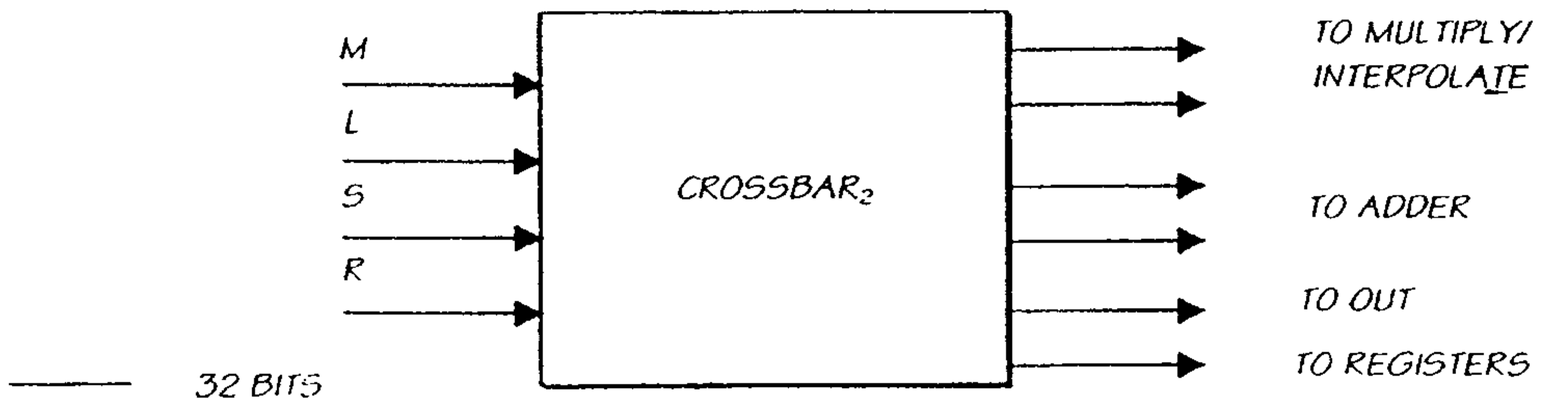
M
L
S
R
CROSSBAR2
TO MULTIPLY/
INTERPOLATE
TO ADDER
TO OUT
TO REGISTERS
32 BITS

FIG. 10

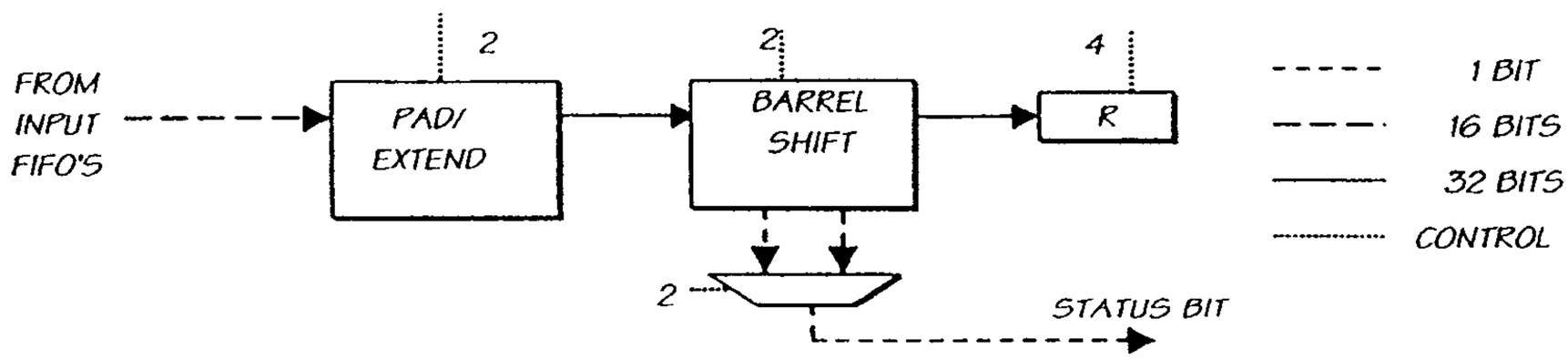
FROM
INPUT
FIFO'S
2
PAD/
EXTEND
2
BARREL
SHIFT
4
R
2
STATUS BIT
1 BIT
16 BITS
32 BITS
CONTROL

FIG. 11

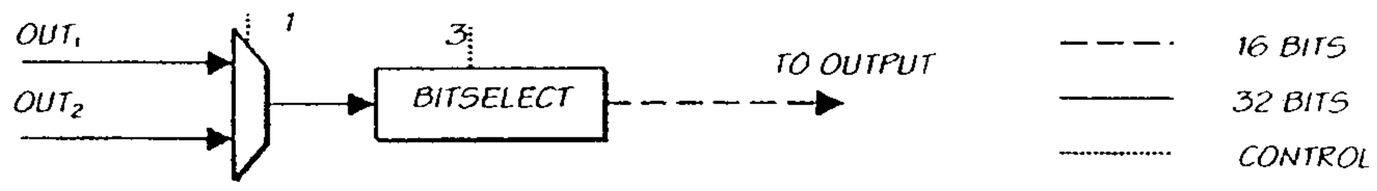

FIG. 12

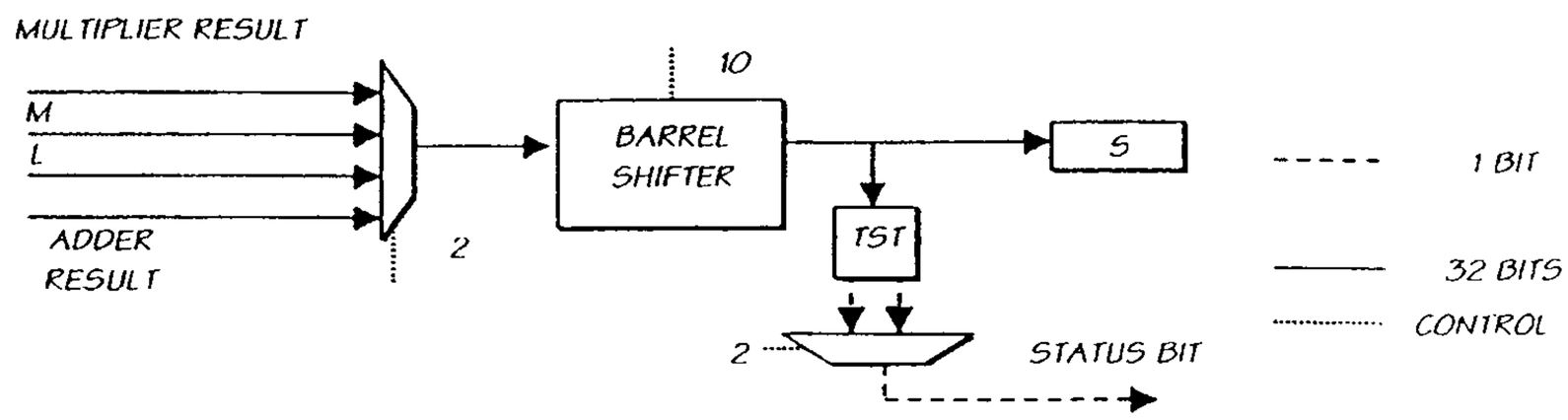

FIG. 13

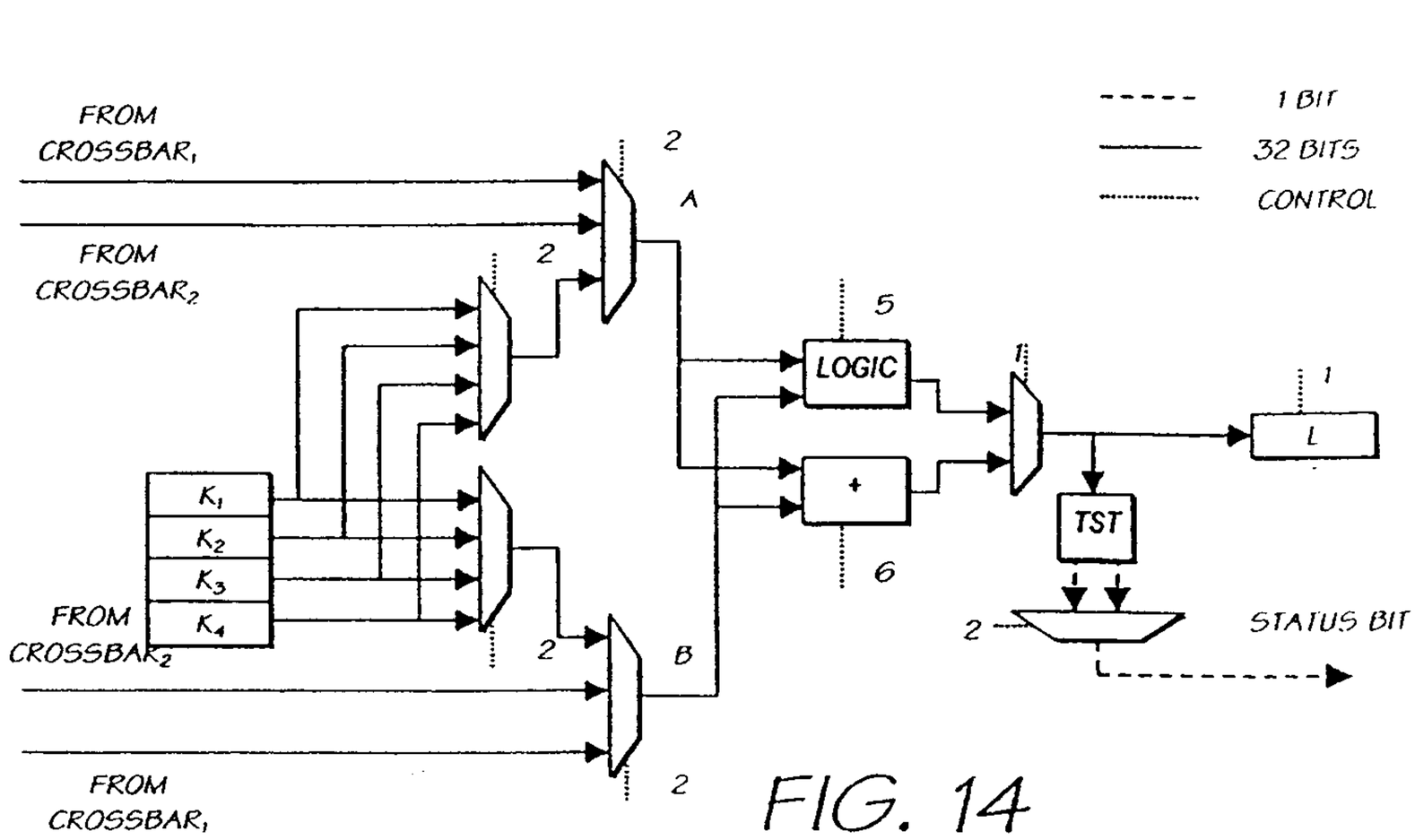

FIG. 14

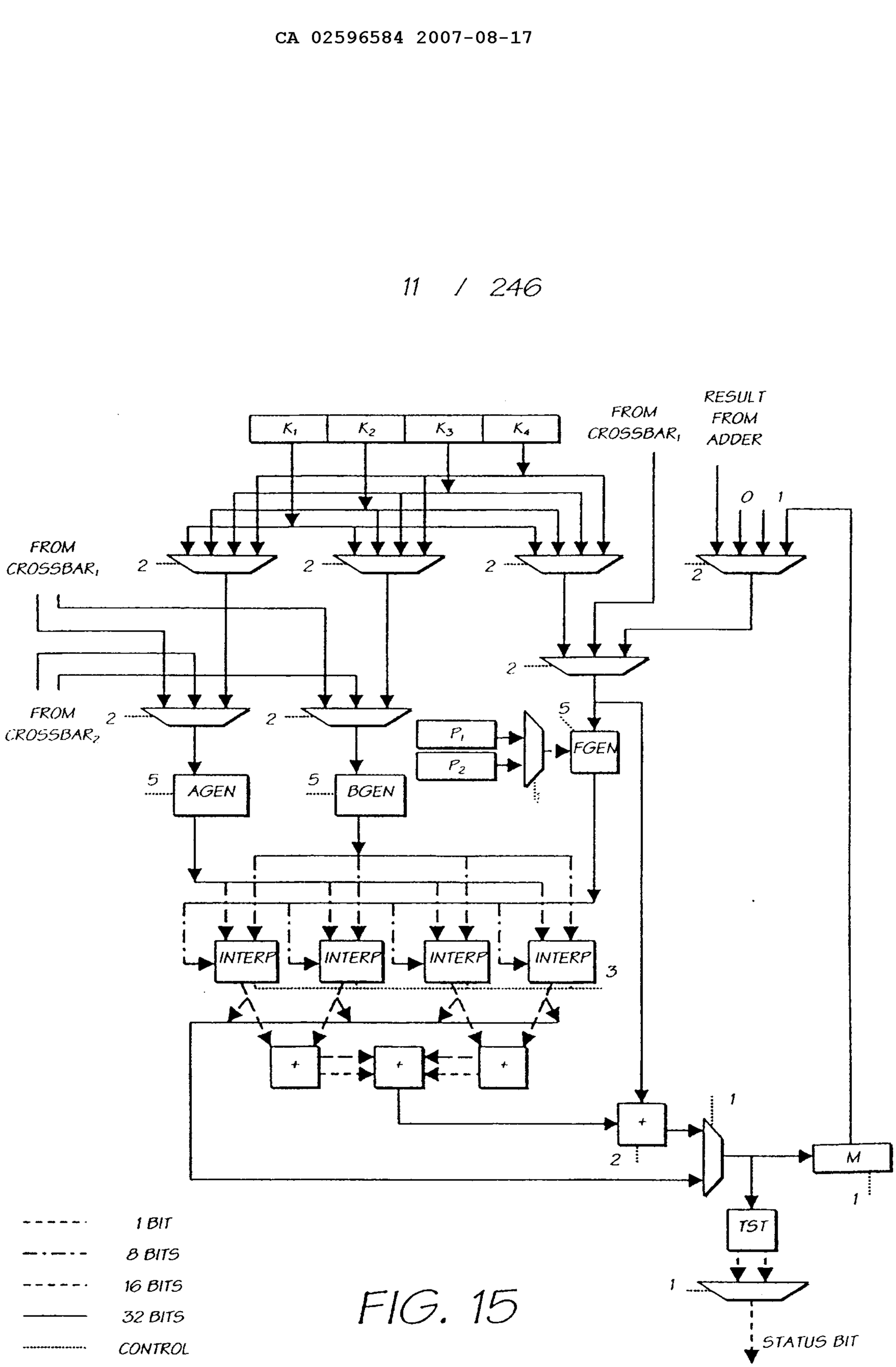
K1
K2
K3
K4
FROM CROSSBAR1
FROM ADDER
0
1
FROM CROSSBAR1
2
2
2
2
FROM CROSSBAR2
2
2
5
AGEN
5
BGEN
P1
P2
5
FGEN
INTERP
INTERP
INTERP
INTERP
3
+
+
+
+
1
2
M
1
TST
1
RESULT
1 BIT
8 BITS
16 BITS
32 BITS
CONTROL
STATUS BIT

FIG. 15

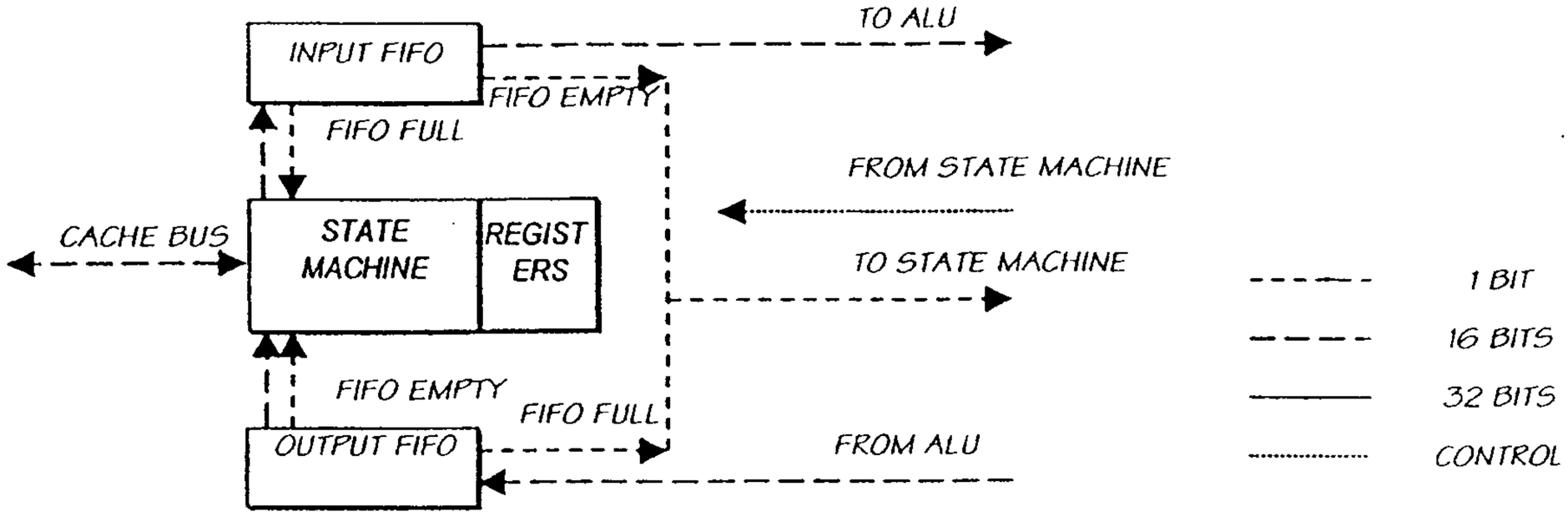

FIG. 16

ORDER OF PIXELS PRESENTED BY A SEQUENTIAL READ ITERATOR ON A 4 X 2 IMAGE WITH PADDING.

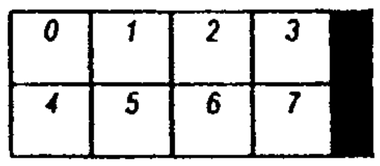

FIG. 17

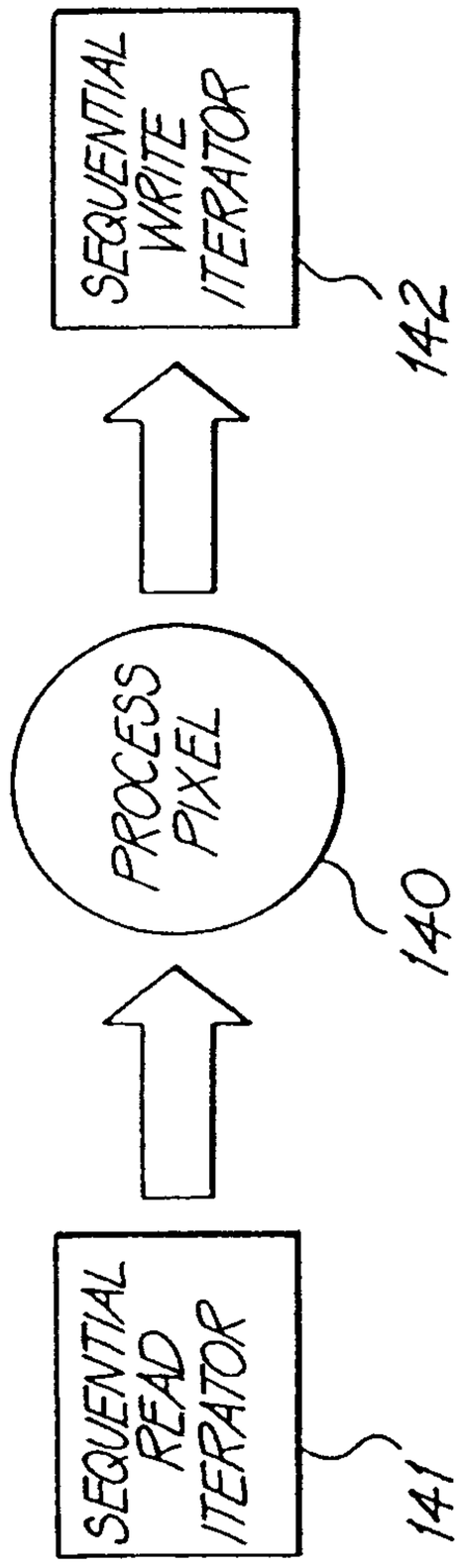
SEQUENTIAL READ ITERATOR
141
PROCESS PIXEL
140
SEQUENTIAL WRITE ITERATOR
142

FIG. 18

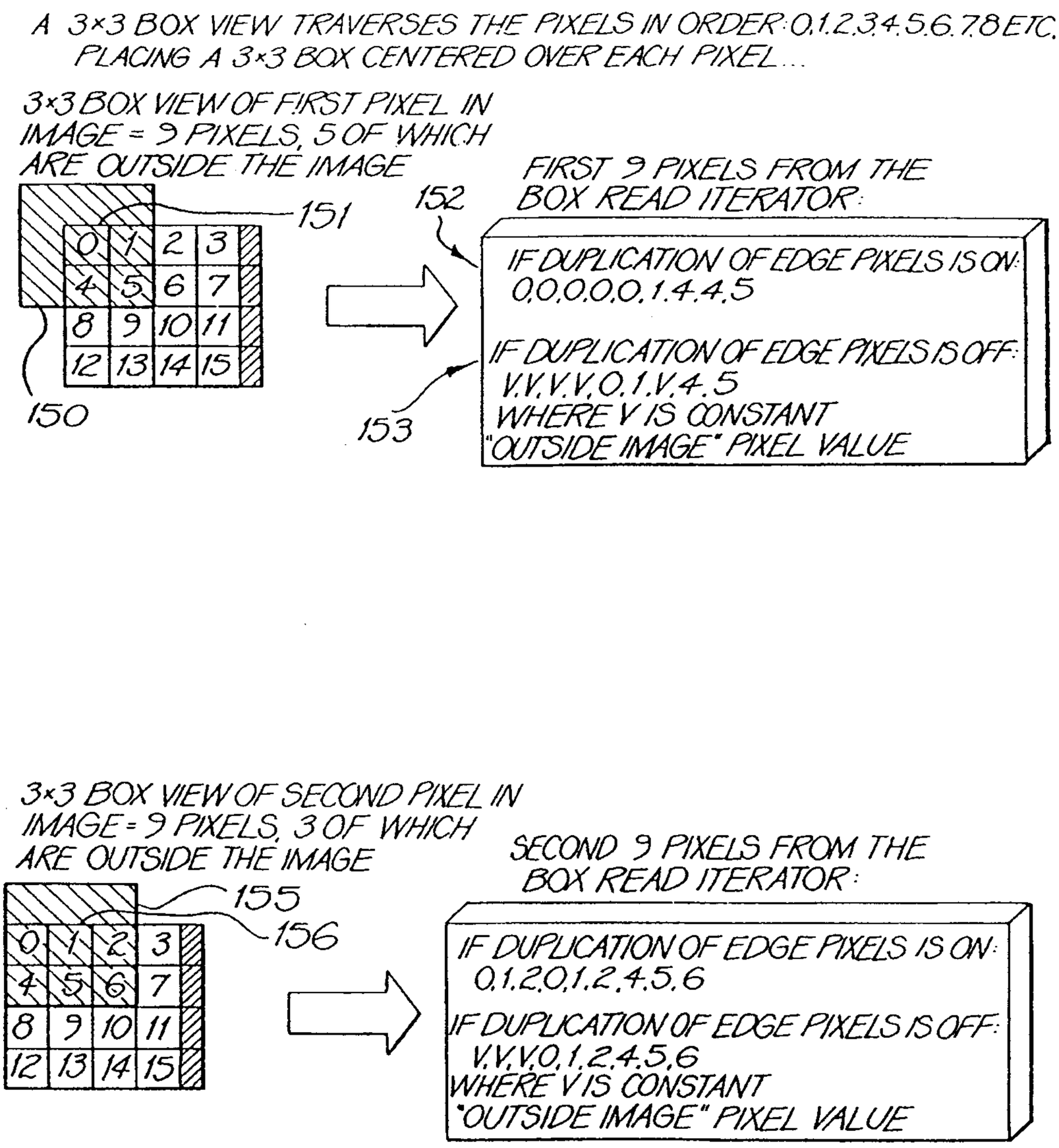
A 3×3 BOX VIEW TRAVERSES THE PIXELS IN ORDER: 0.1.2.3.4.5.6.7.8 ETC.
PLACING A 3×3 BOX CENTERED OVER EACH PIXEL...
3×3 BOX VIEW OF FIRST PIXEL IN IMAGE = 9 PIXELS, 5 OF WHICH ARE OUTSIDE THE IMAGE
0 1 2 3
4 5 6 7
8 9 10 11
12 13 14 15
151
150
152
FIRST 9 PIXELS FROM THE BOX READ ITERATOR:
IF DUPLICATION OF EDGE PIXELS IS ON:
0,0,0,0,0,1,4,4,5
IF DUPLICATION OF EDGE PIXELS IS OFF:
V,V,V,V,0,1,V,4,5
WHERE V IS CONSTANT "OUTSIDE IMAGE" PIXEL VALUE
153
3×3 BOX VIEW OF SECOND PIXEL IN IMAGE = 9 PIXELS, 3 OF WHICH ARE OUTSIDE THE IMAGE
155
156
0 1 2 3
4 5 6 7
8 9 10 11
12 13 14 15
SECOND 9 PIXELS FROM THE BOX READ ITERATOR:
IF DUPLICATION OF EDGE PIXELS IS ON:
0,1,2,0,1,2,4,5,6
IF DUPLICATION OF EDGE PIXELS IS OFF:
V,V,V,0,1,2,4,5,6
WHERE V IS CONSTANT "OUTSIDE IMAGE" PIXEL VALUE

FIG. 19

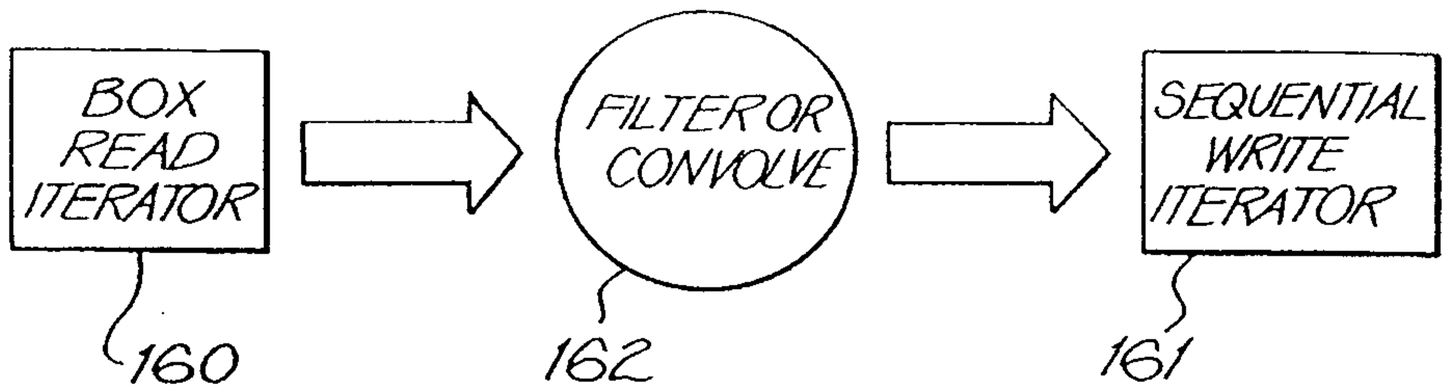
BOX READ ITERATOR
FILTER OR CONVOLVE
SEQUENTIAL WRITE ITERATOR
160
162
161

FIG. 20

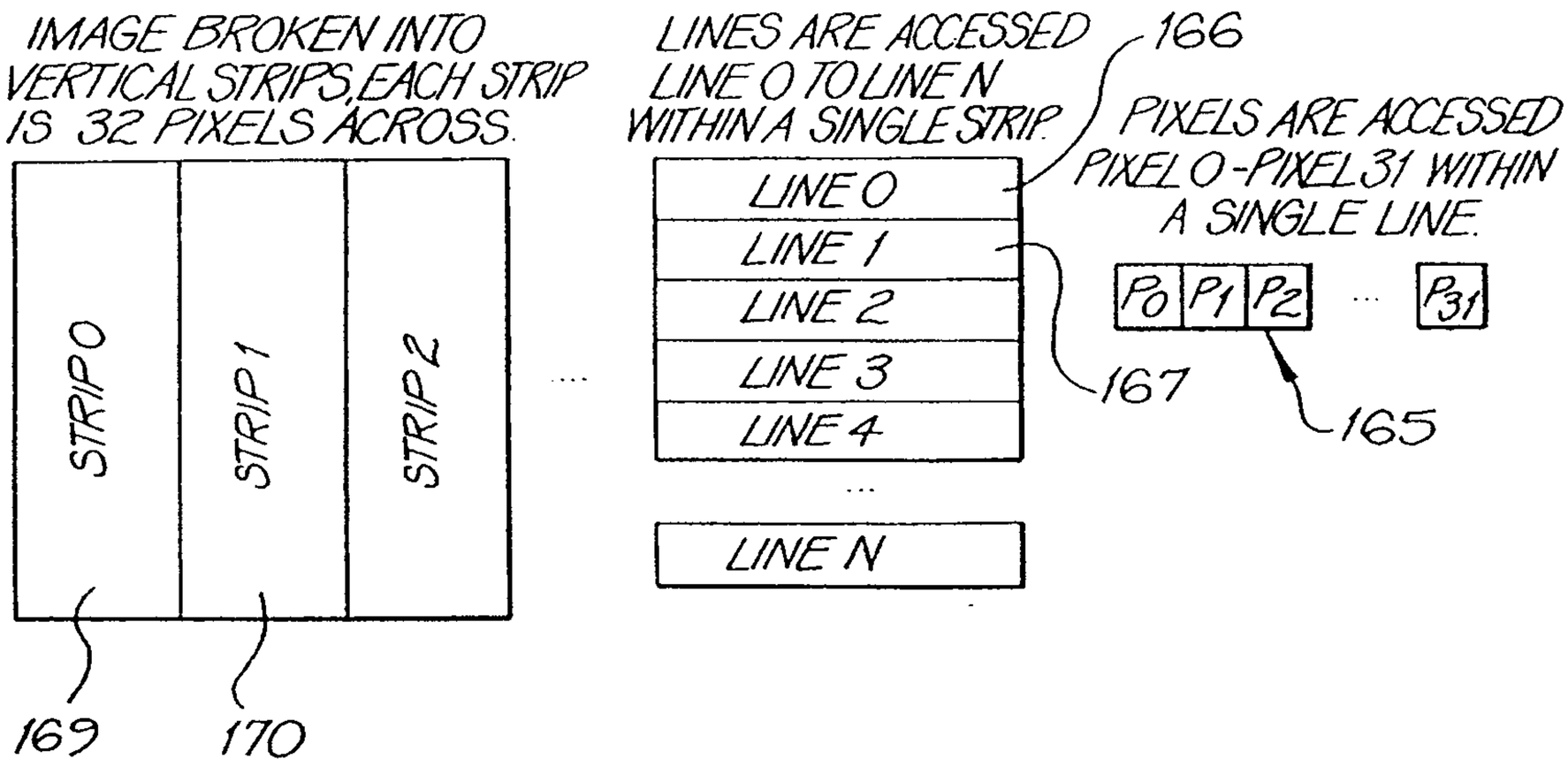
IMAGE BROKEN INTO VERTICAL STRIPS, EACH STRIP IS 32 PIXELS ACROSS.
STRIP 0
STRIP 1
STRIP 2
169
170
LINES ARE ACCESSED LINE 0 TO LINE N WITHIN A SINGLE STRIP.
LINE 0
LINE 1
LINE 2
LINE 3
LINE 4
LINE N
167
166
PIXELS ARE ACCESSED PIXEL 0 - PIXEL 31 WITHIN A SINGLE LINE.
P0 P1 P2 P31
165

FIG. 21

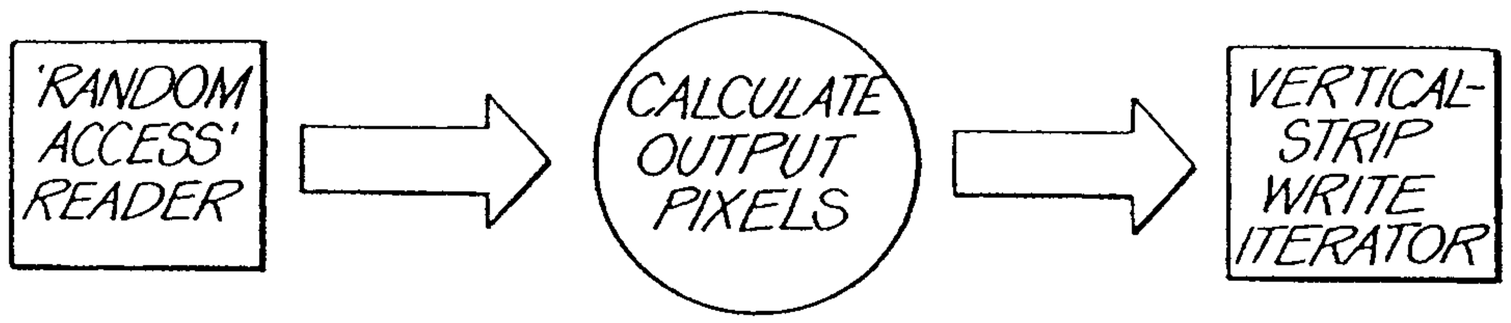
'RANDOM ACCESS' READER
CALCULATE OUTPUT PIXELS
VERTICAL-STRIP WRITE ITERATOR

FIG. 22

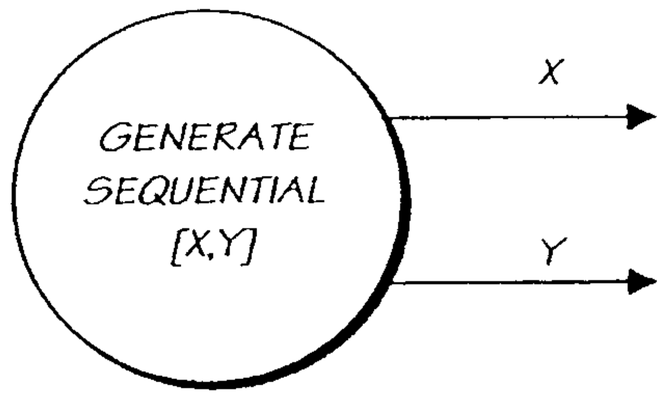

FIG. 23

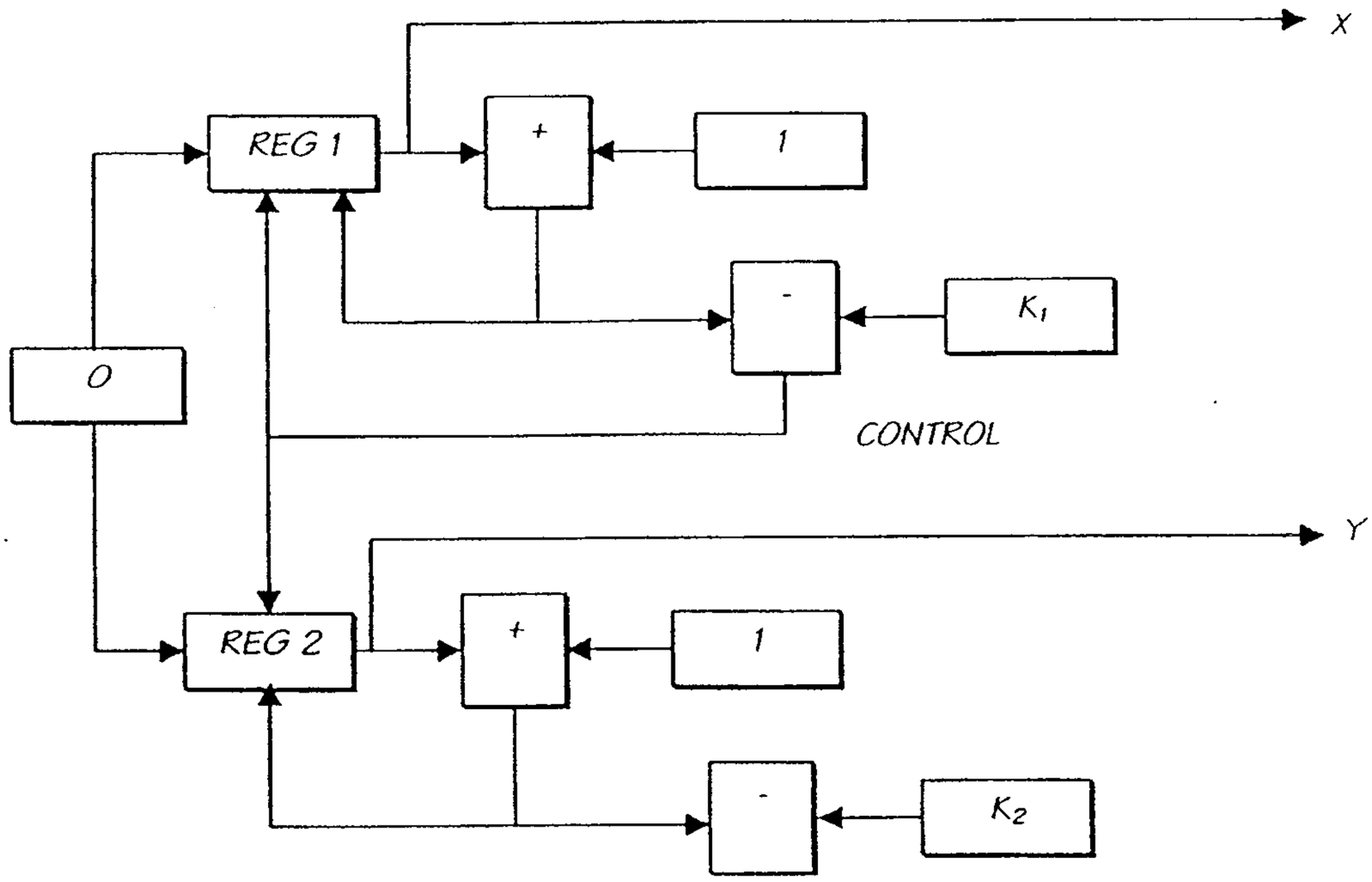

FIG. 24

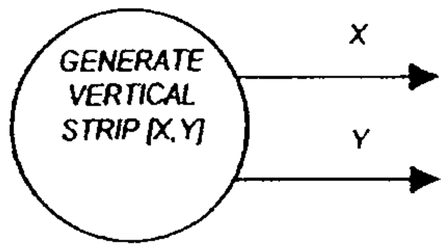
GENERATE VERTICAL STRIP [X,Y]
X
Y

FIG. 25

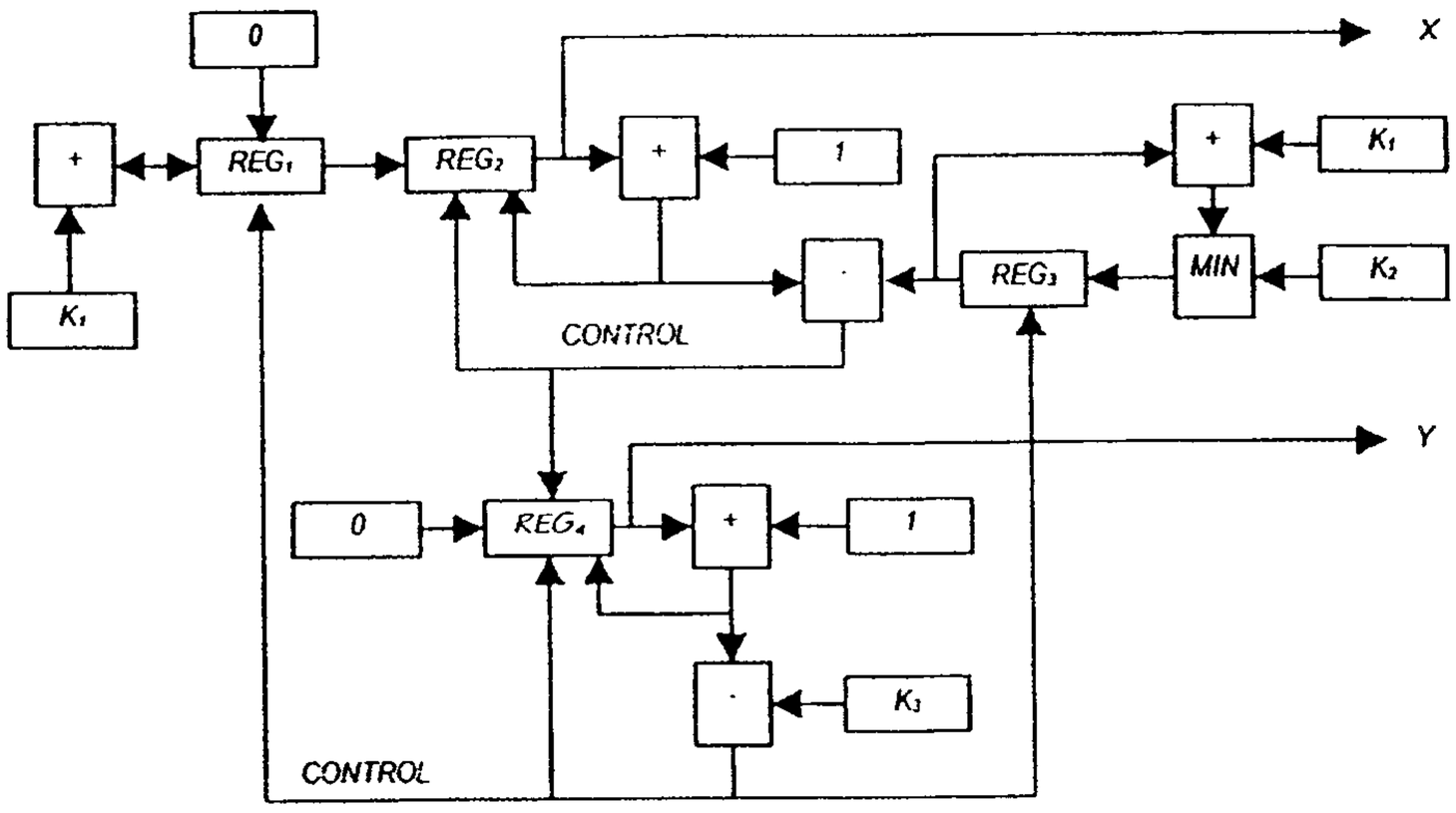
0
+
REG1
REG2
+
1
K1
CONTROL
x
+
K1
MIN
K2
REG3
Y
0
REG4
+
1
K3
CONTROL

FIG. 26

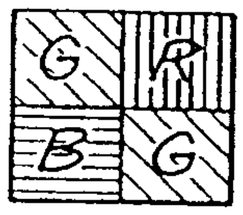

2x2 PIXEL BLOCK FROM CCD

FIG. 27

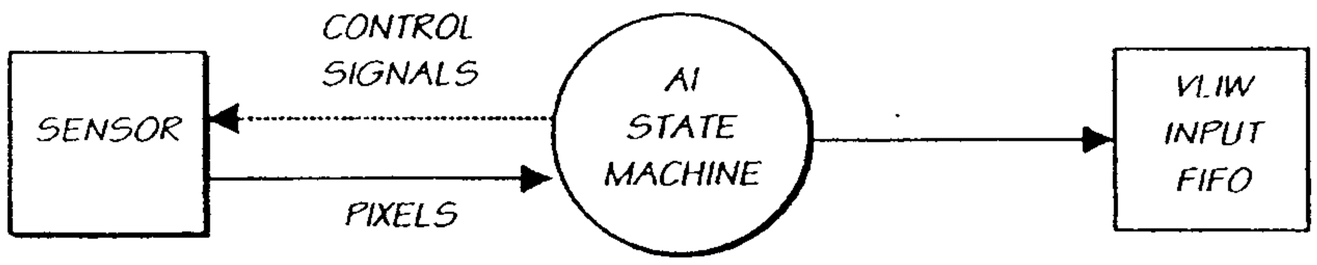

FIG. 28

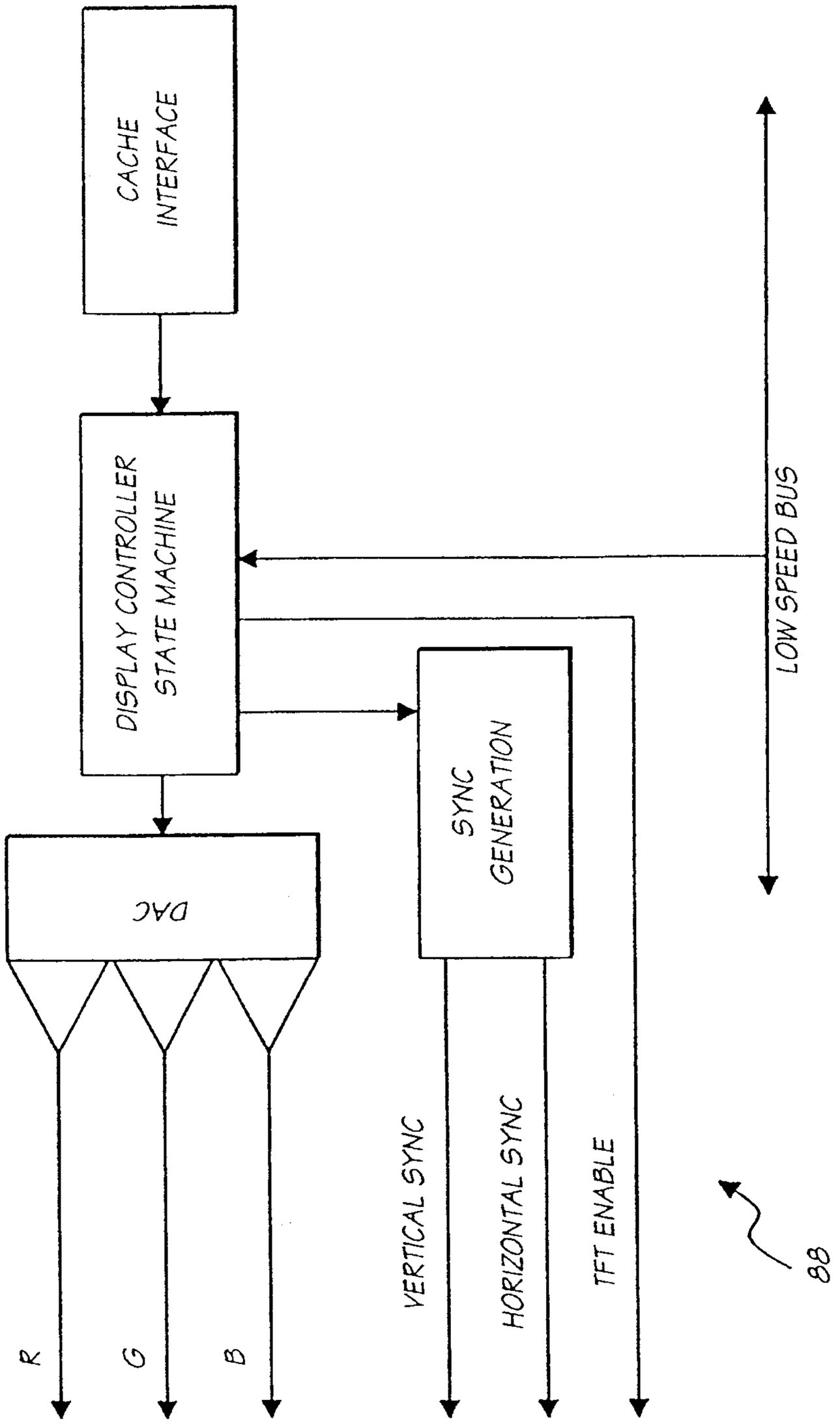
CACHE INTERFACE
DISPLAY CONTROLLER STATE MACHINE
DAC
SYNC GENERATION
LOW SPEED BUS
R
G
B
VERTICAL SYNC
HORIZONTAL SYNC
TFT ENABLE
88

FIG. 29

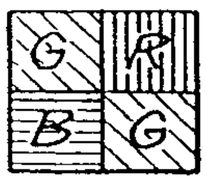

2x2 PIXEL BLOCK FROM CCD

FIG. 30

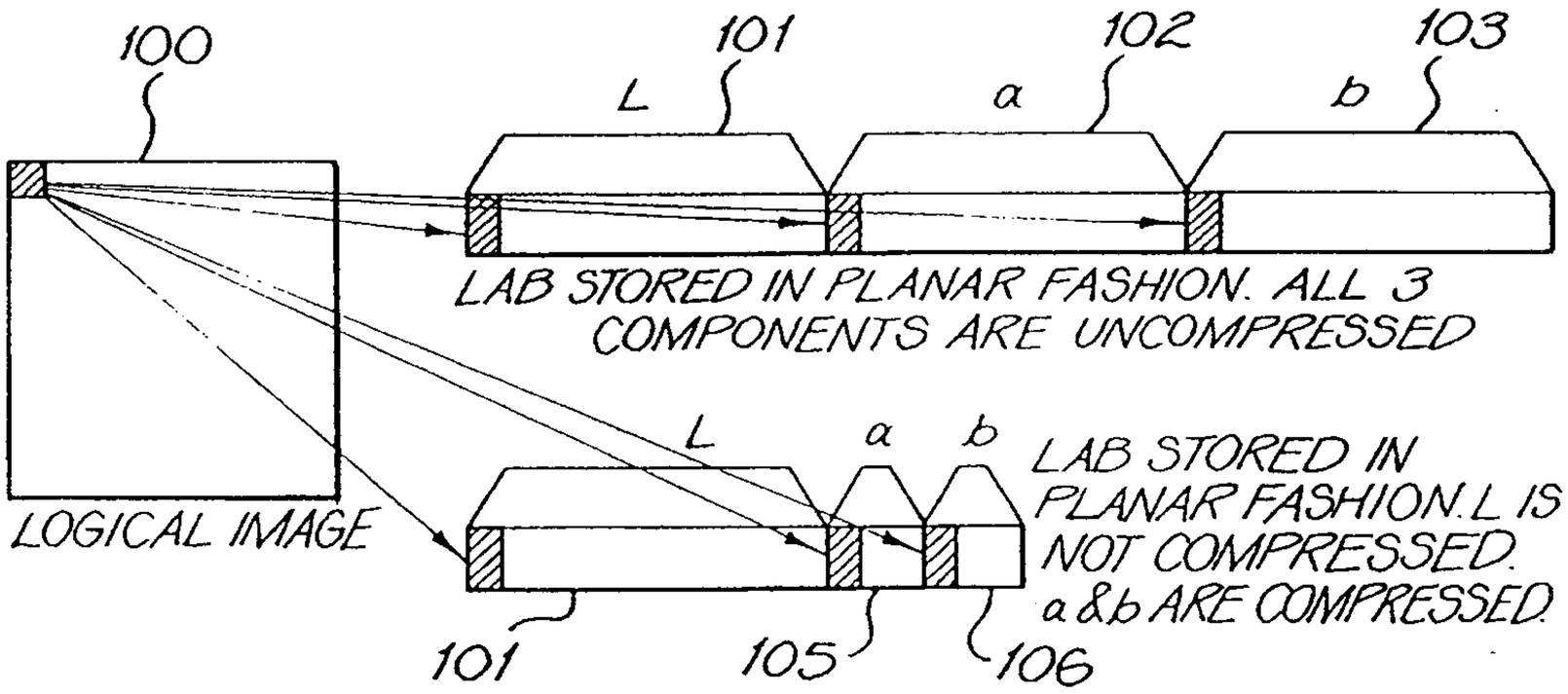

FIG. 31

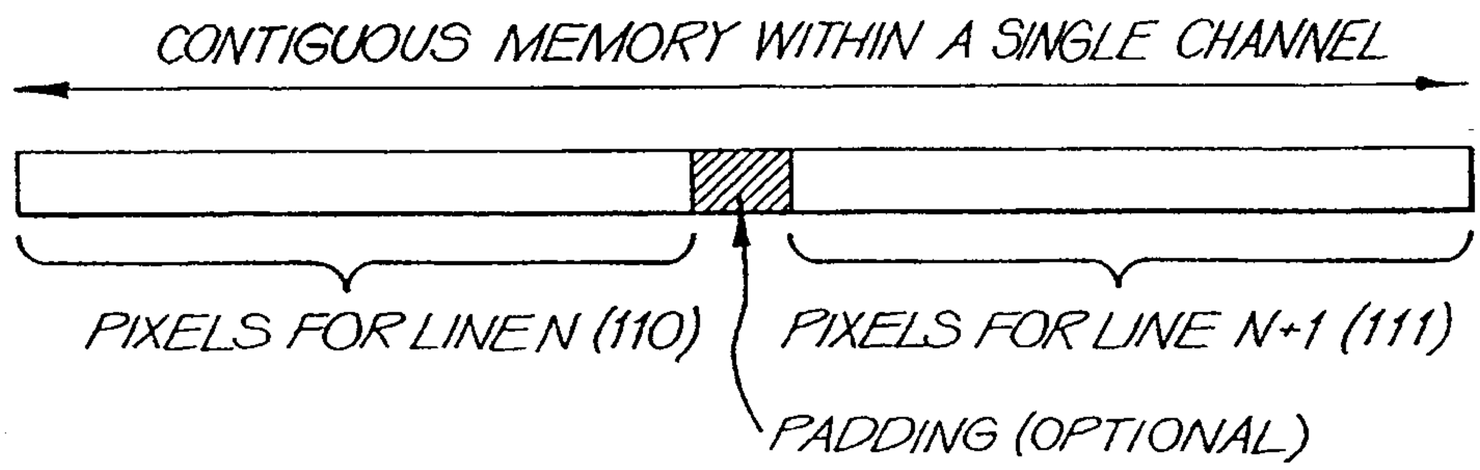

FIG. 32

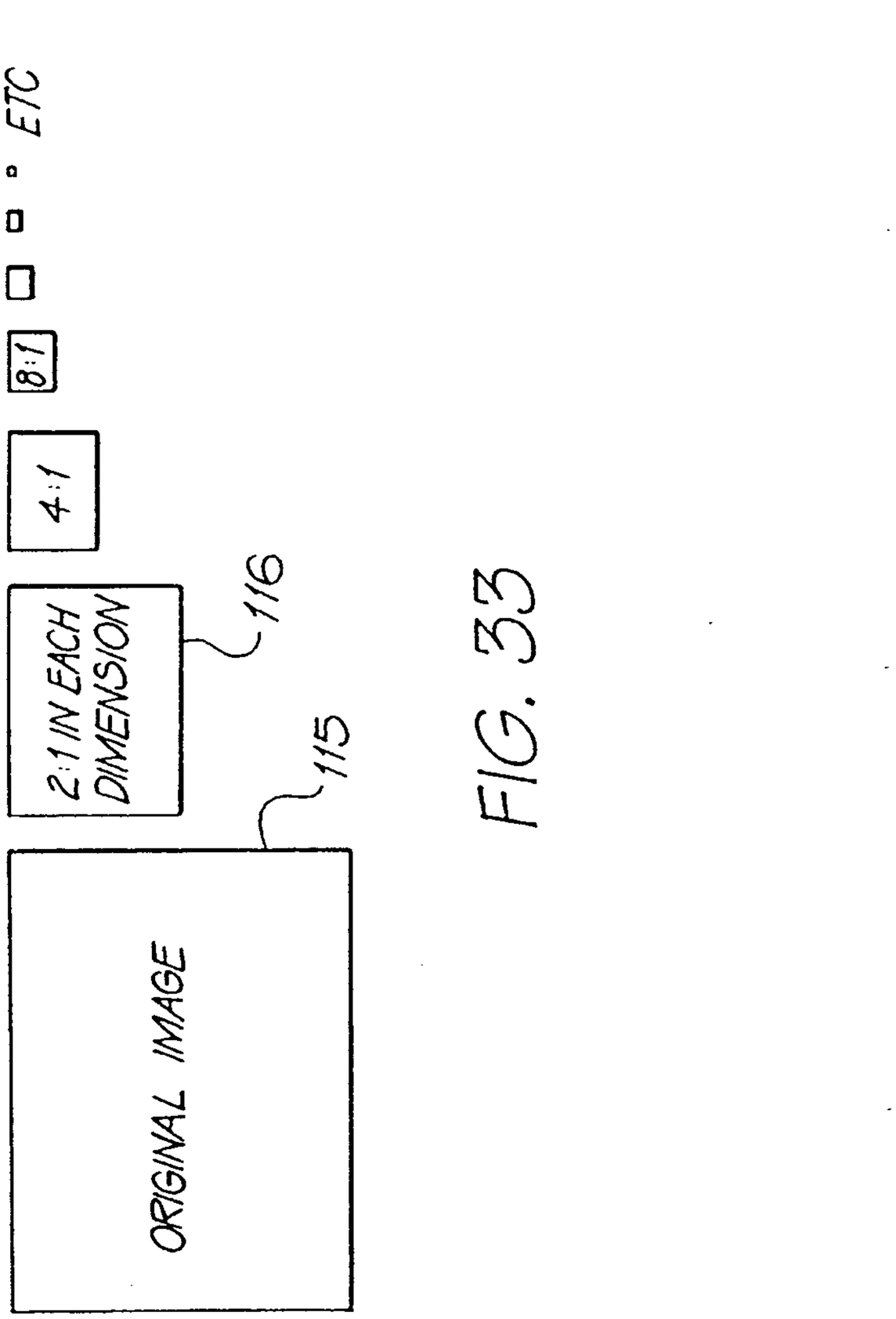

FIG. 33

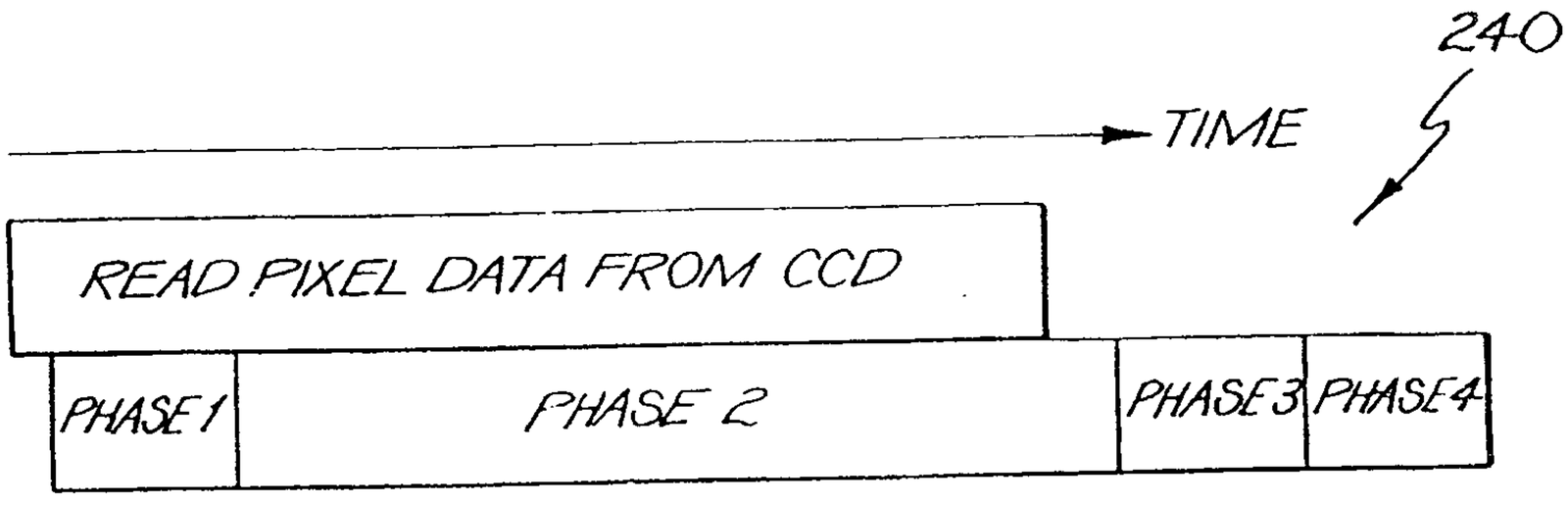
240
TIME
READ PIXEL DATA FROM CCD
PHASE 1
PHASE 2
PHASE 3
PHASE 4

FIG. 34

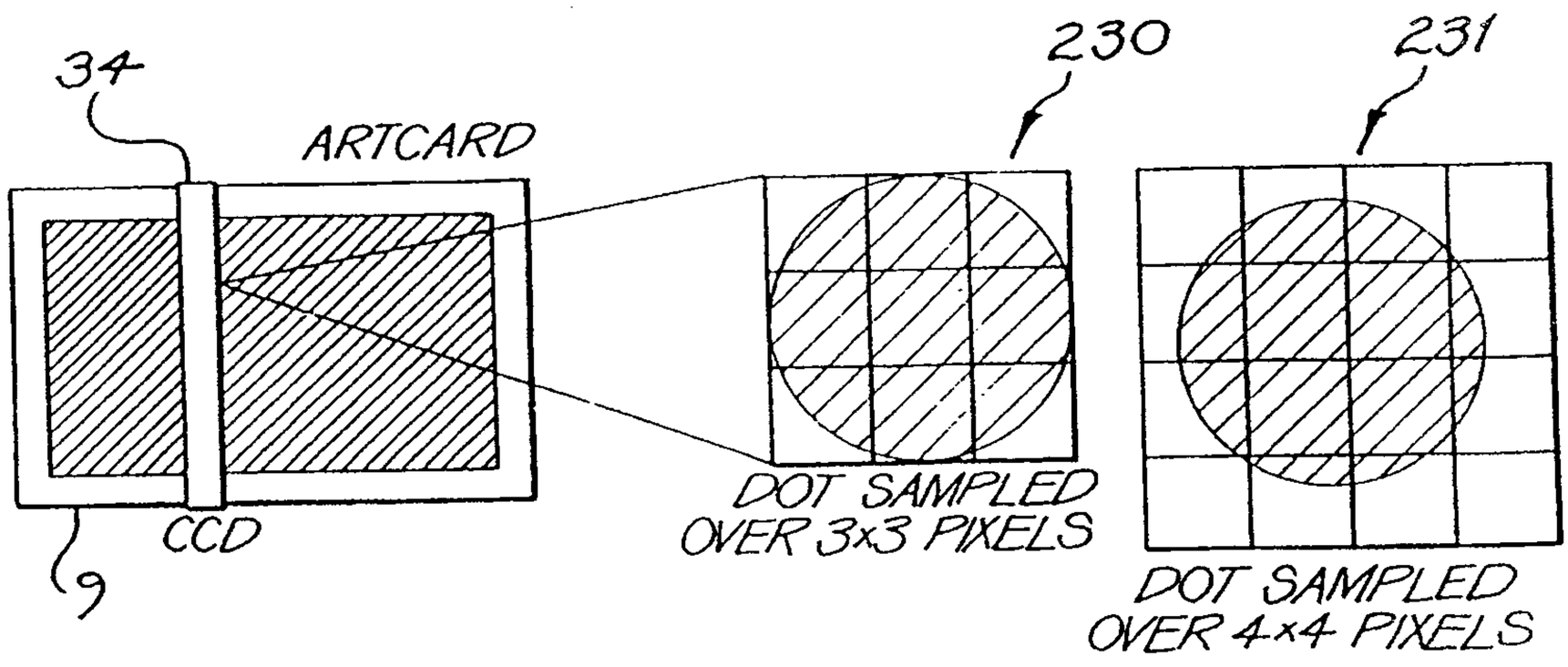
34
ARTCARD
CCD
9
230
DOT SAMPLED
OVER 3x3 PIXELS
231
DOT SAMPLED
OVER 4x4 PIXELS

FIG. 35

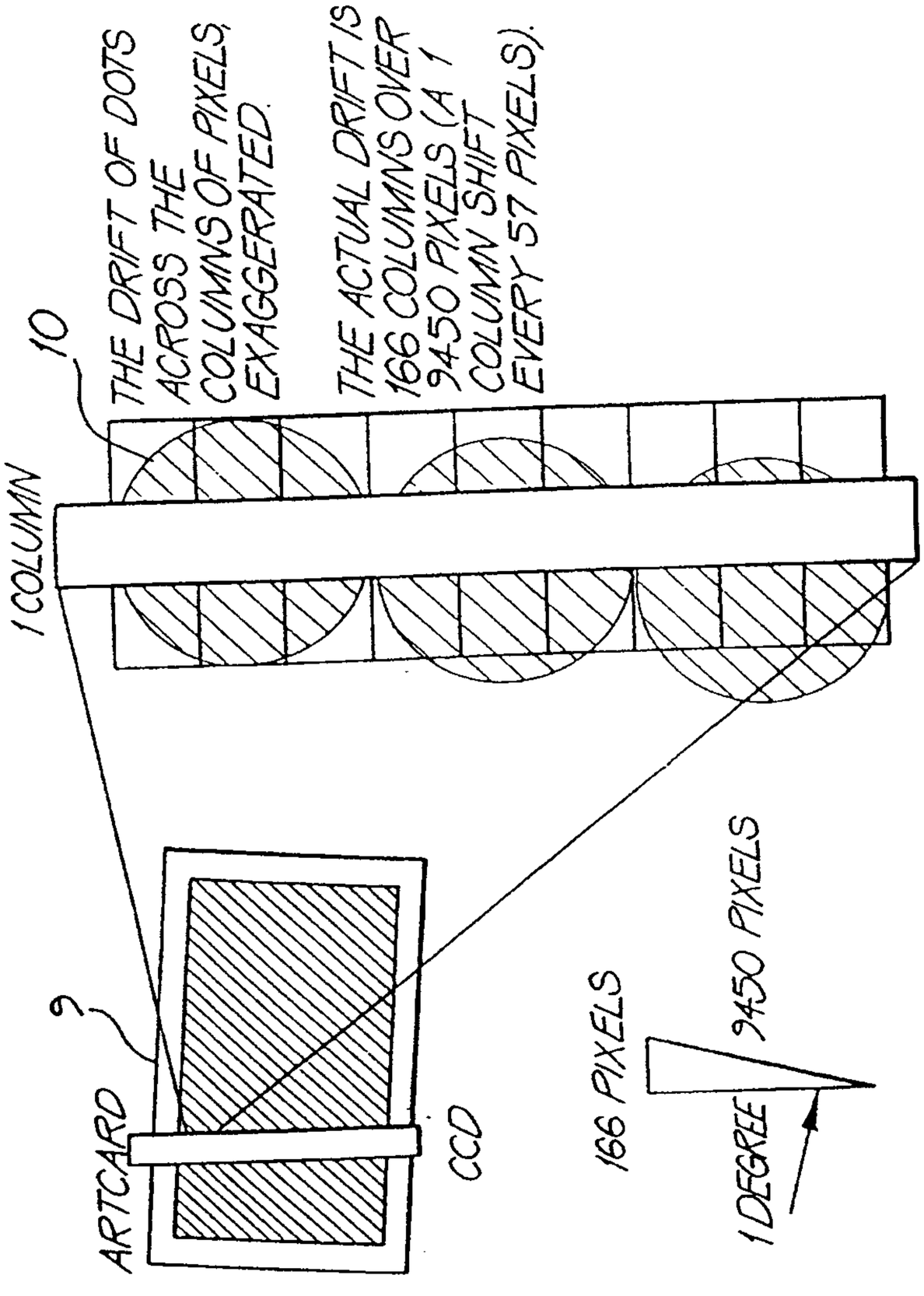
10
THE DRIFT OF DOTS ACROSS THE COLUMNS OF PIXELS, EXAGGERATED.
THE ACTUAL DRIFT IS 166 COLUMNS OVER 9450 PIXELS (A 1 COLUMN SHIFT EVERY 57 PIXELS).
1 COLUMN
9
ARTCARD
CCD
166 PIXELS
9450 PIXELS
1 DEGREE

FIG. 36

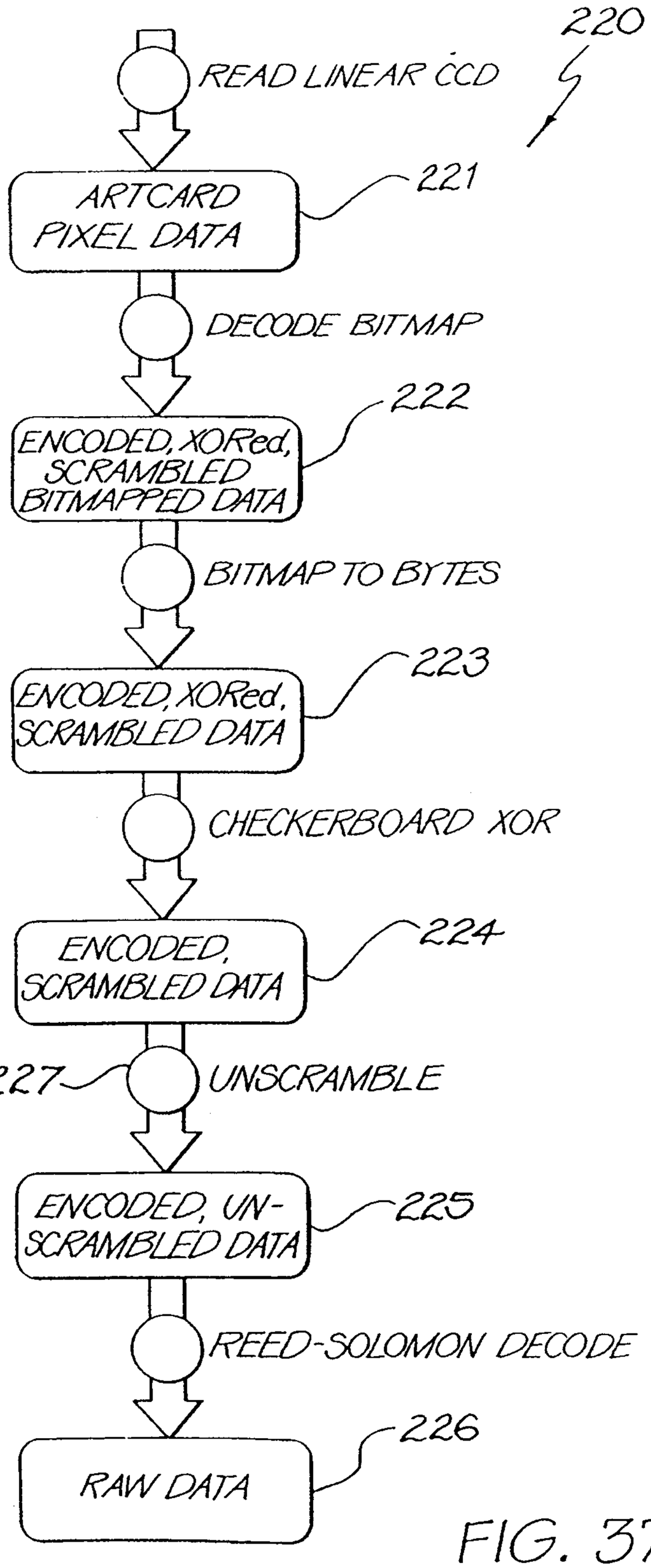
220
READ LINEAR CCD
ARTCARD PIXEL DATA
221
DECODE BITMAP
ENCODED, XORed, SCRAMBLED BITMAPPED DATA
222
BITMAP TO BYTES
ENCODED, XORed, SCRAMBLED DATA
223
CHECKERBOARD XOR
ENCODED, SCRAMBLED DATA
224
227
UNSCRAMBLE
ENCODED, UN-SCRAMBLED DATA
225
REED-SOLOMON DECODE
RAW DATA
226

FIG. 37

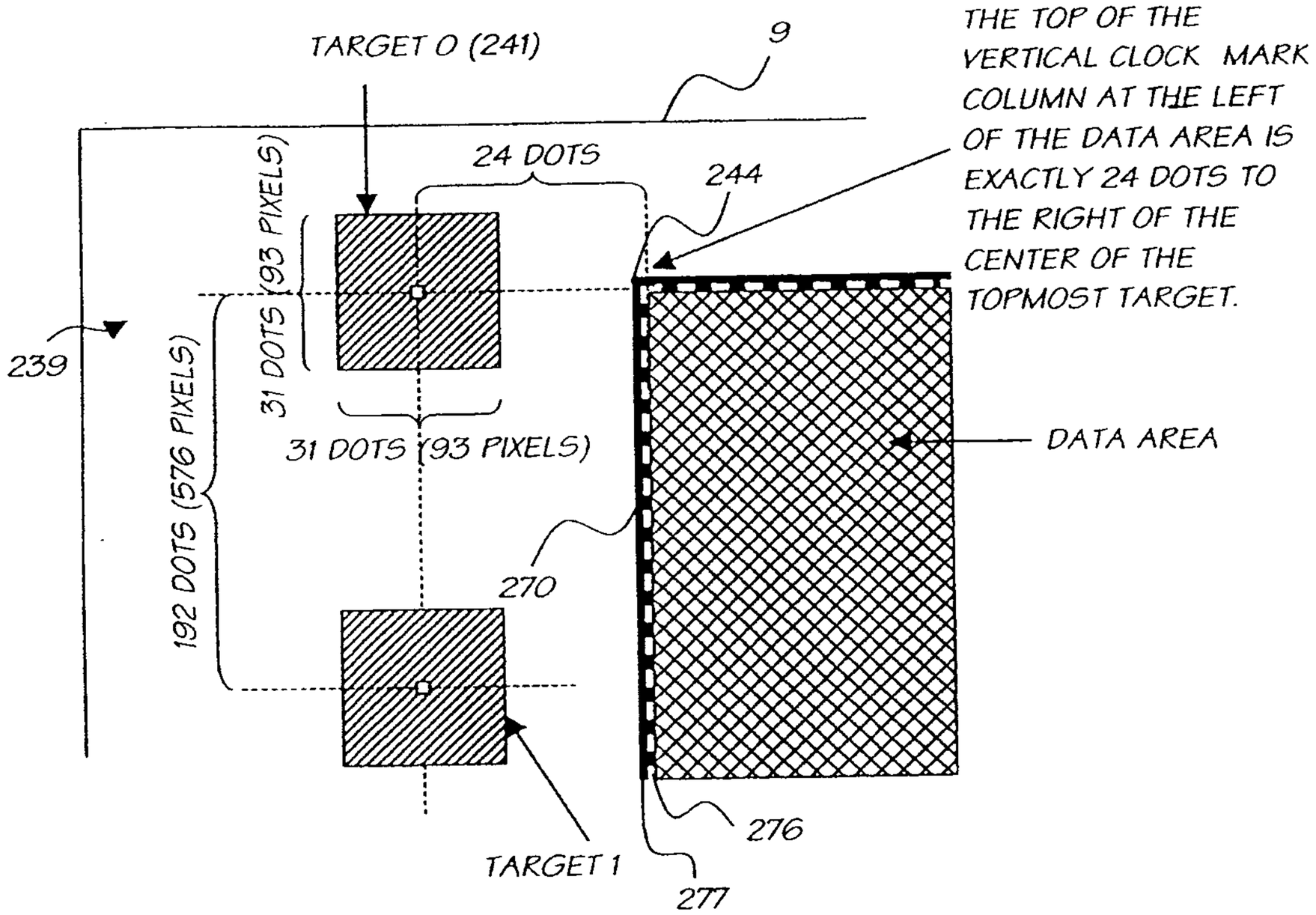
TARGET 0 (241)
9
THE TOP OF THE VERTICAL CLOCK MARK COLUMN AT THE LEFT OF THE DATA AREA IS EXACTLY 24 DOTS TO THE RIGHT OF THE CENTER OF THE TOPMOST TARGET.
24 DOTS
244
31 DOTS (93 PIXELS)
239
192 DOTS (576 PIXELS)
31 DOTS (93 PIXELS)
DATA AREA
270
TARGET 1
276
277

FIG. 38

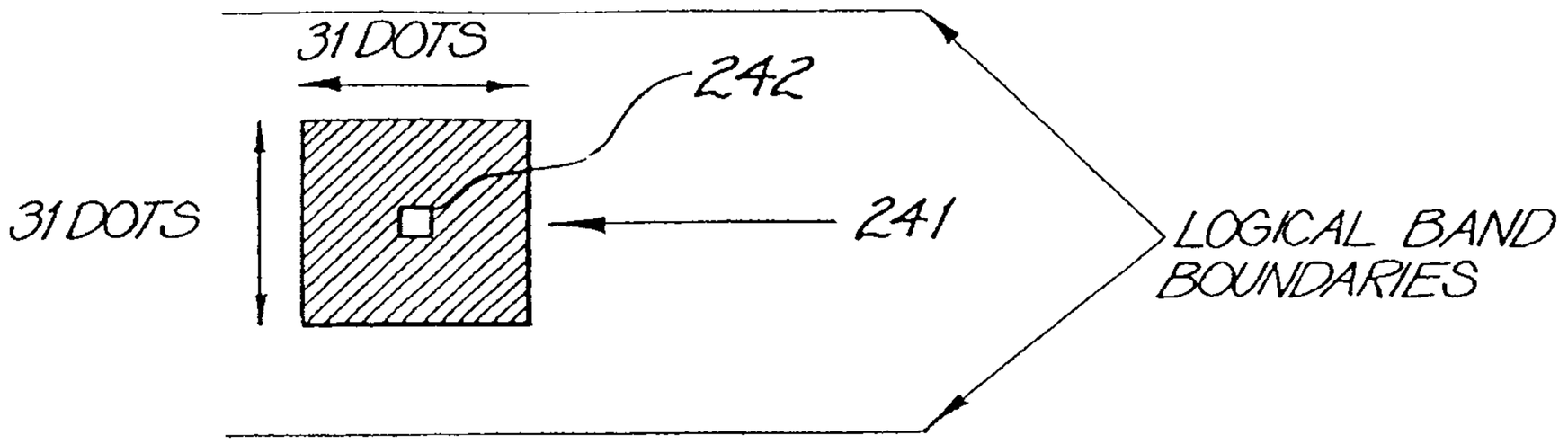
31 DOTS
242
31 DOTS
241
LOGICAL BAND BOUNDARIES

FIG. 39

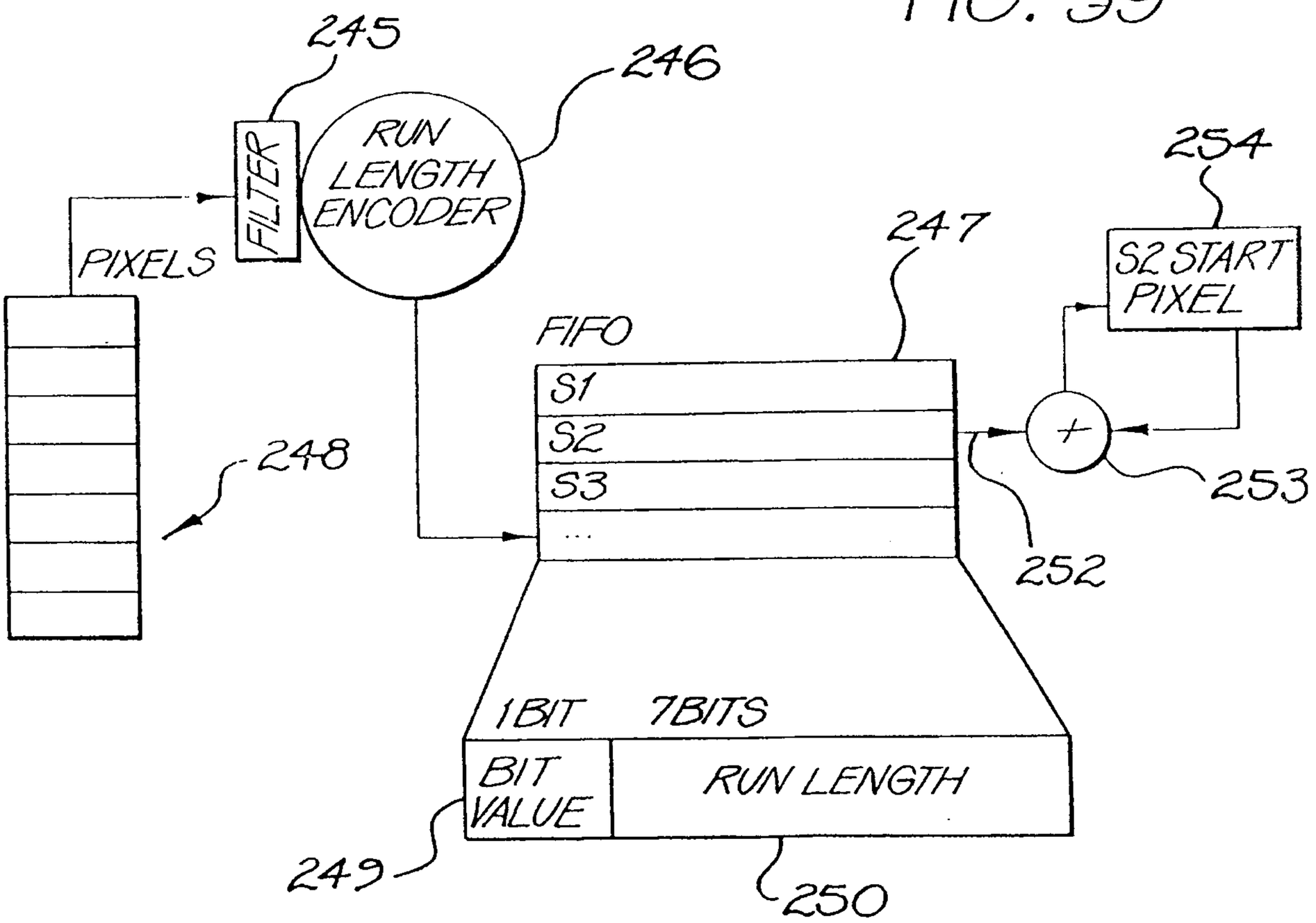
245
246
FILTER
RUN LENGTH ENCODER
PIXELS
247
FIFO
254
S2 START PIXEL
S1
S2
S3
...
248
253
252
1BIT
7BITS
BIT VALUE
RUN LENGTH
249
250

FIG. 40

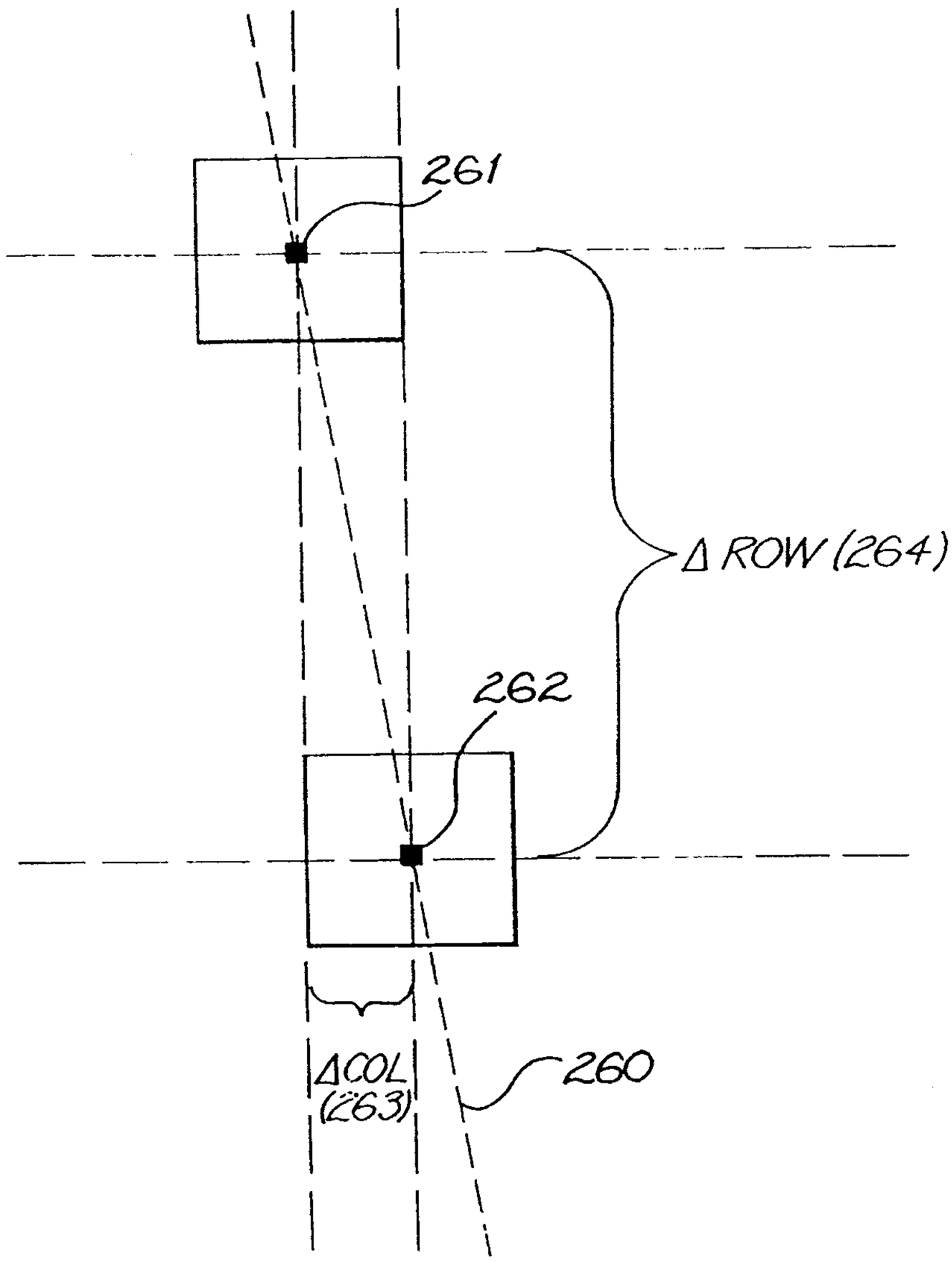

FIG. 41

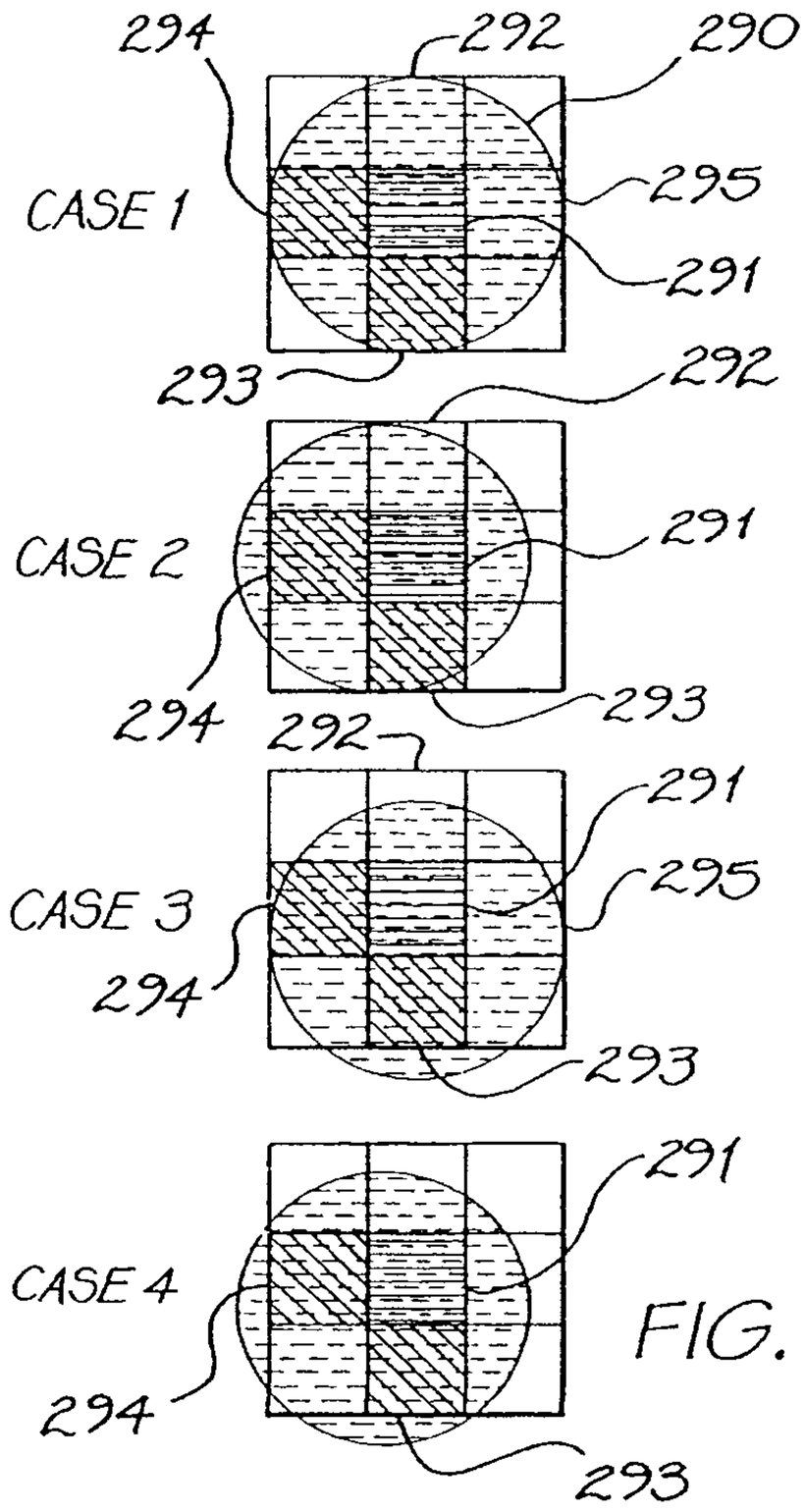
294
292
290
CASE 1
295
291
293
292
CASE 2
291
294
293
292
291
CASE 3
295
294
293
291
CASE 4
294
293

FIG. 42

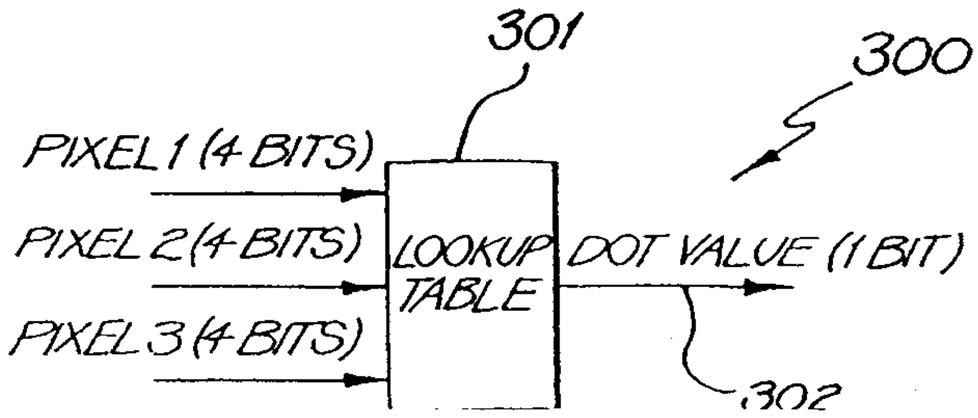
301
300
PIXEL 1 (4 BITS)
PIXEL 2 (4 BITS)
PIXEL 3 (4 BITS)
LOOKUP TABLE
DOT VALUE (1 BIT)
302

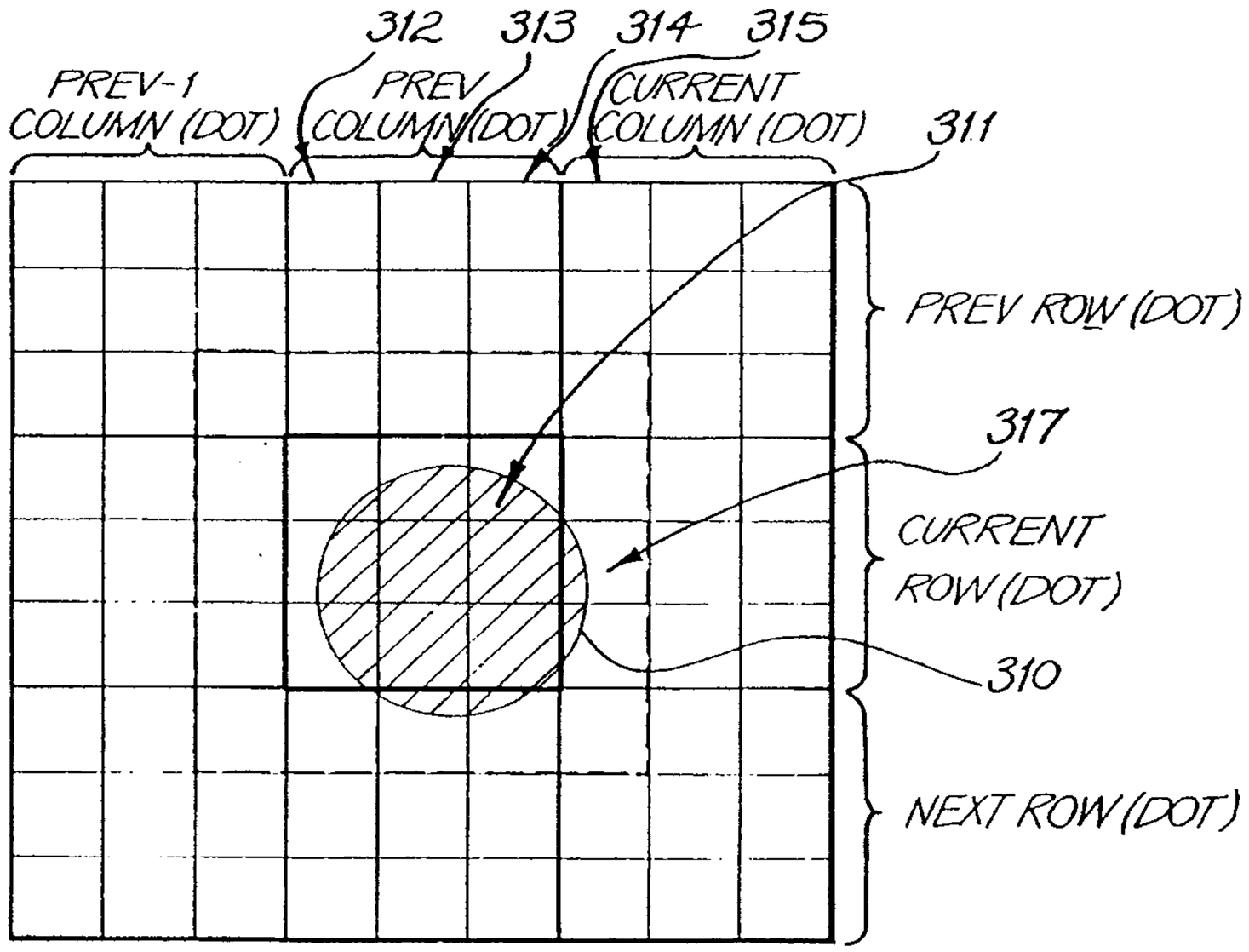
312
313
314
315
PREV-1 COLUMN (DOT)
PREV COLUMN (DOT)
CURRENT COLUMN (DOT)
311
PREV ROW (DOT)
317
CURRENT ROW (DOT)
310
NEXT ROW (DOT)

FIG. 44

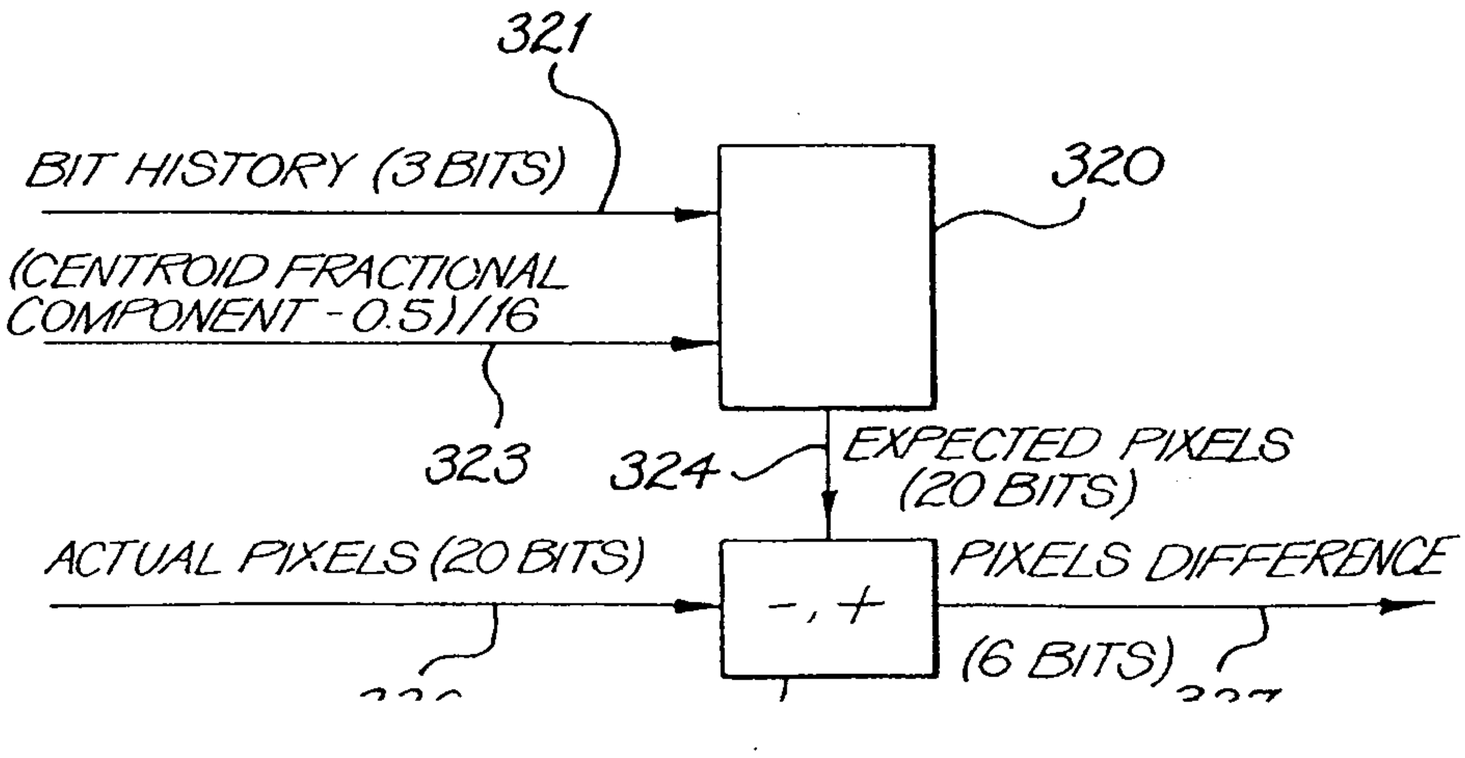
321
BIT HISTORY (3 BITS)
(CENTROID FRACTIONAL COMPONENT - 0.5)/16
320
323
324
EXPECTED PIXELS (20 BITS)
ACTUAL PIXELS (20 BITS)
-, +
PIXELS DIFFERENCE
(6 BITS)

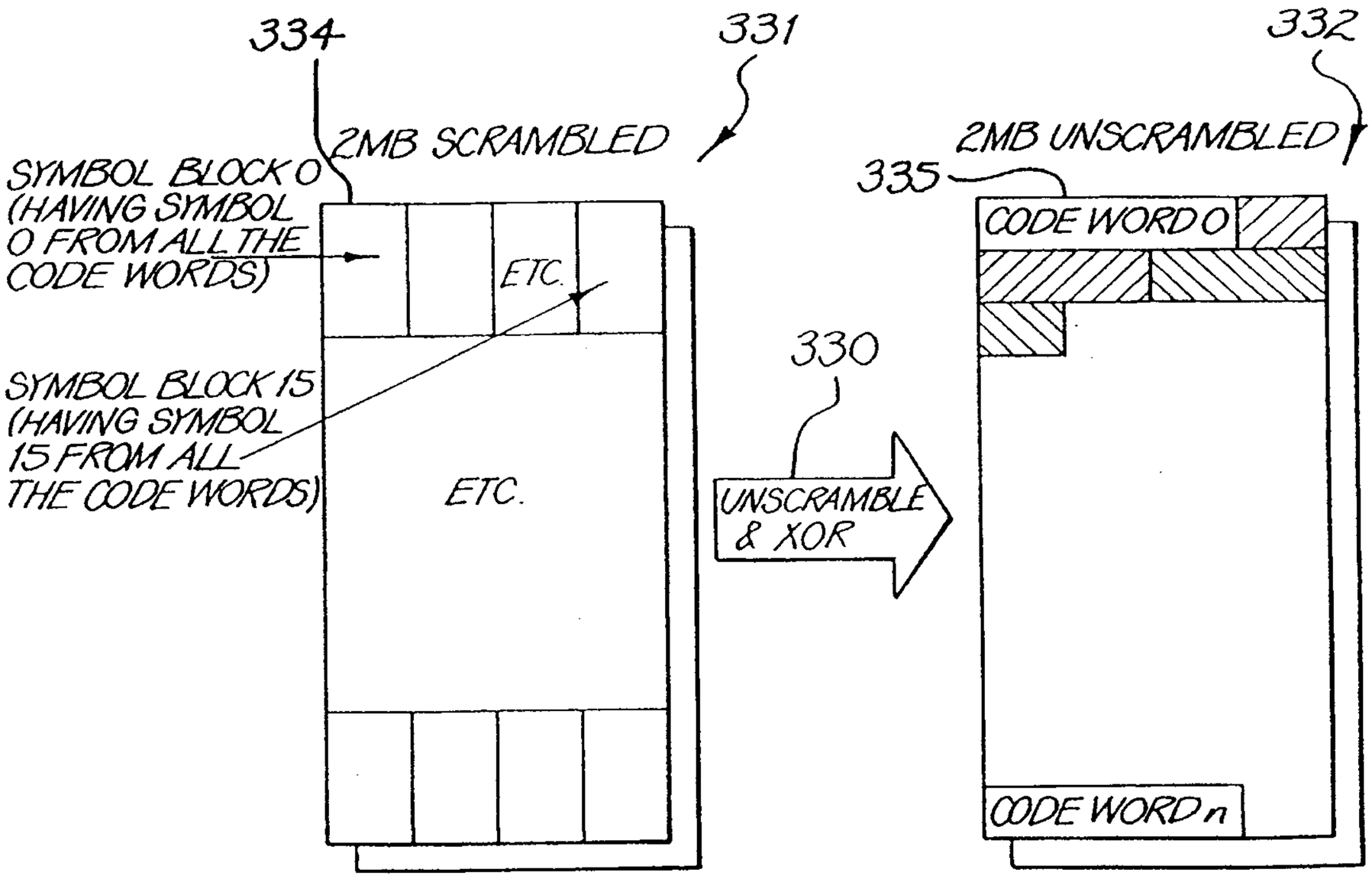
334
331
332
2MB SCRAMBLED
2MB UNSCRAMBLED
335
SYMBOL BLOCK 0 (HAVING SYMBOL 0 FROM ALL THE CODE WORDS)
ETC.
SYMBOL BLOCK 15 (HAVING SYMBOL 15 FROM ALL THE CODE WORDS)
ETC.
330
UNSCRAMBLE & XOR
CODE WORD 0
CODE WORD n

FIG. 46

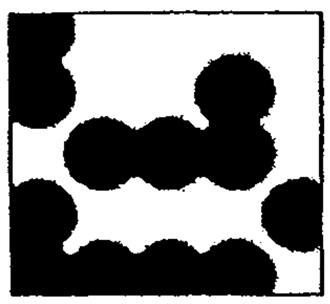

BLACK AND WHITE DOTS

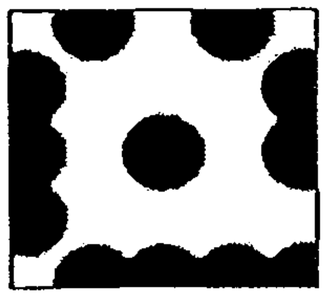

BLACK DOT SURROUNDED BY WHITE

WHITE DOT SURROUNDED BY BLACK

FIG. 47

00:	4F	00	3D	4F	00	3D	4F	00	3D	4F	00	3D	32 COPIES OF THE 3 BYTE CONTROL INFORMATION
0C:	4F	00	3D	4F	00	3D	4F	00	3D	4F	00	3D	
18:	4F	00	3D	4F	00	3D	4F	00	3D	4F	00	3D	
24:	4F	00	3D	4F	00	3D	4F	00	3D	4F	00	3D	
30:	4F	00	3D	4F	00	3D	4F	00	3D	4F	00	3D	
3C:	4F	00	3D	4F	00	3D	4F	00	3D	4F	00	3D	
48:	4F	00	3D	4F	00	3D	4F	00	3D	4F	00	3D	
54:	4F	00	3D	4F	00	3D	4F	00	3D	4F	00	3D	
60:	00	00	00	00	00	00	00	00	00	00	00	00	RESERVED BYTES ARE 0
6C:	00	00	00	00	00	00	00	00	00	00	00	00	
78:	00	00	00	00	00	00	00	00	00	00	00		

FIG. 59

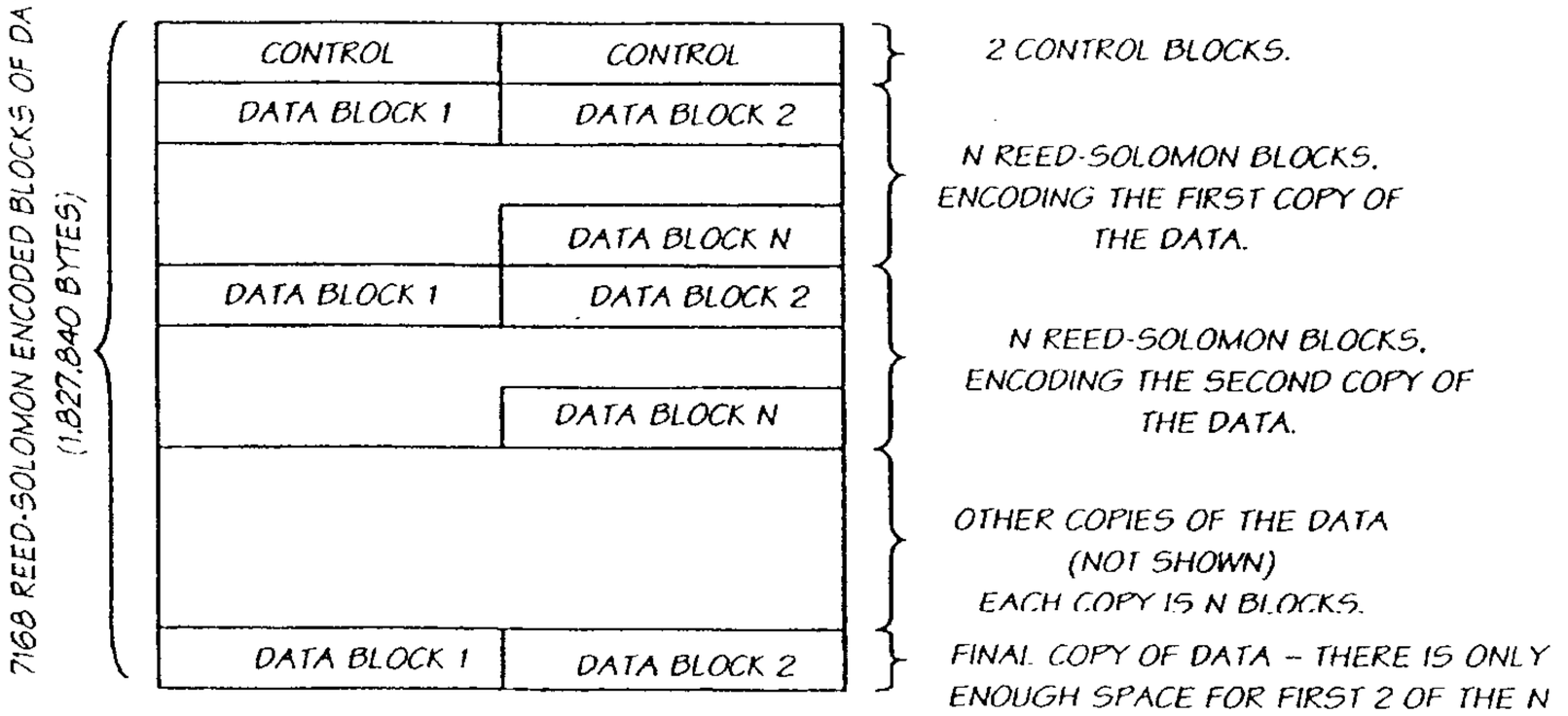

FIG. 58

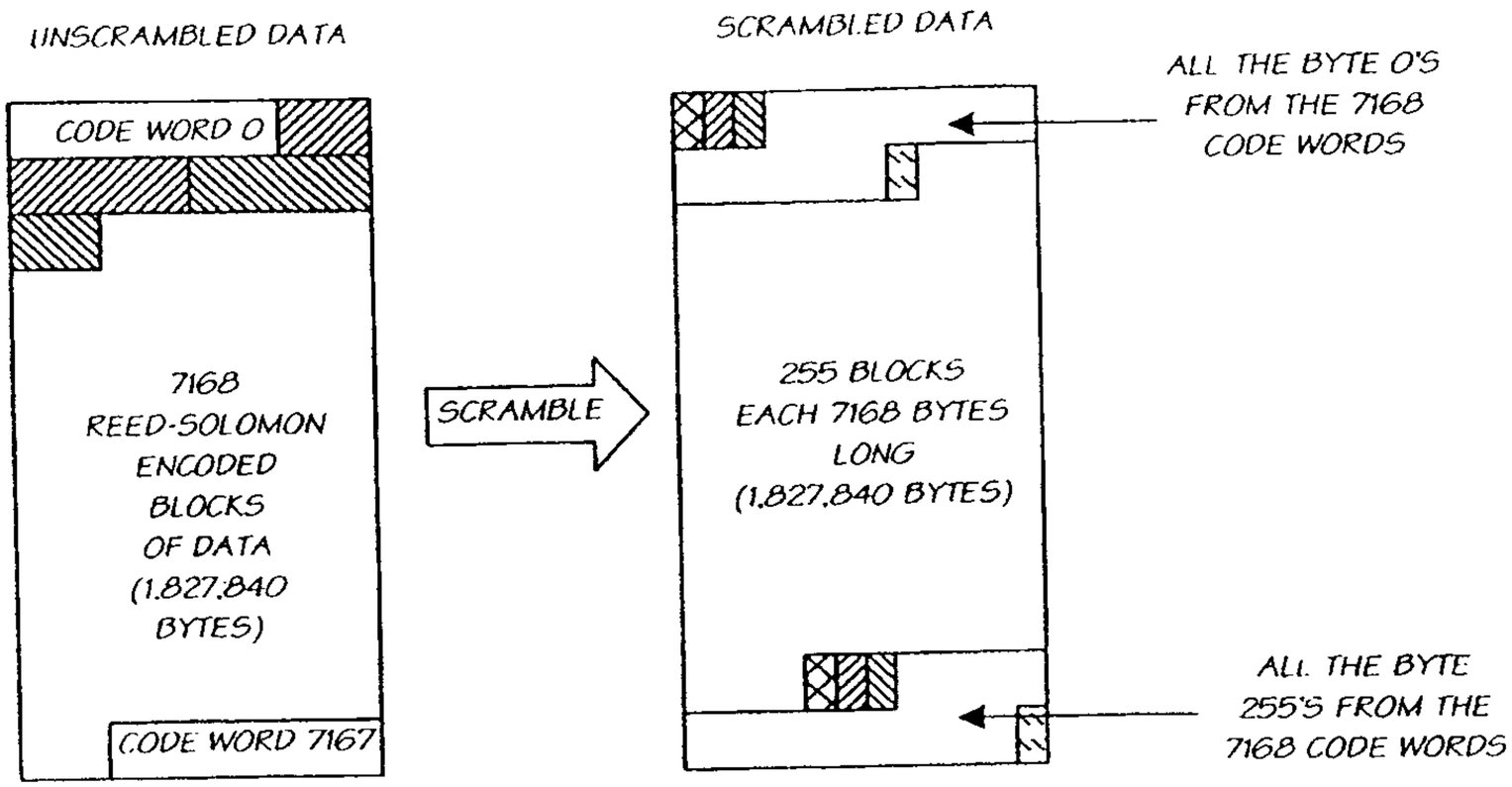
UNSCRAMBLED DATA
CODE WORD 0
7168 REED-SOLOMON ENCODED BLOCKS OF DATA (1,827,840 BYTES)
CODE WORD 7167
SCRAMBLE
SCRAMBLED DATA
ALL THE BYTE 0'S FROM THE 7168 CODE WORDS
255 BLOCKS EACH 7168 BYTES LONG (1,827,840 BYTES)
ALL THE BYTE 255'S FROM THE 7168 CODE WORDS

FIG. 60

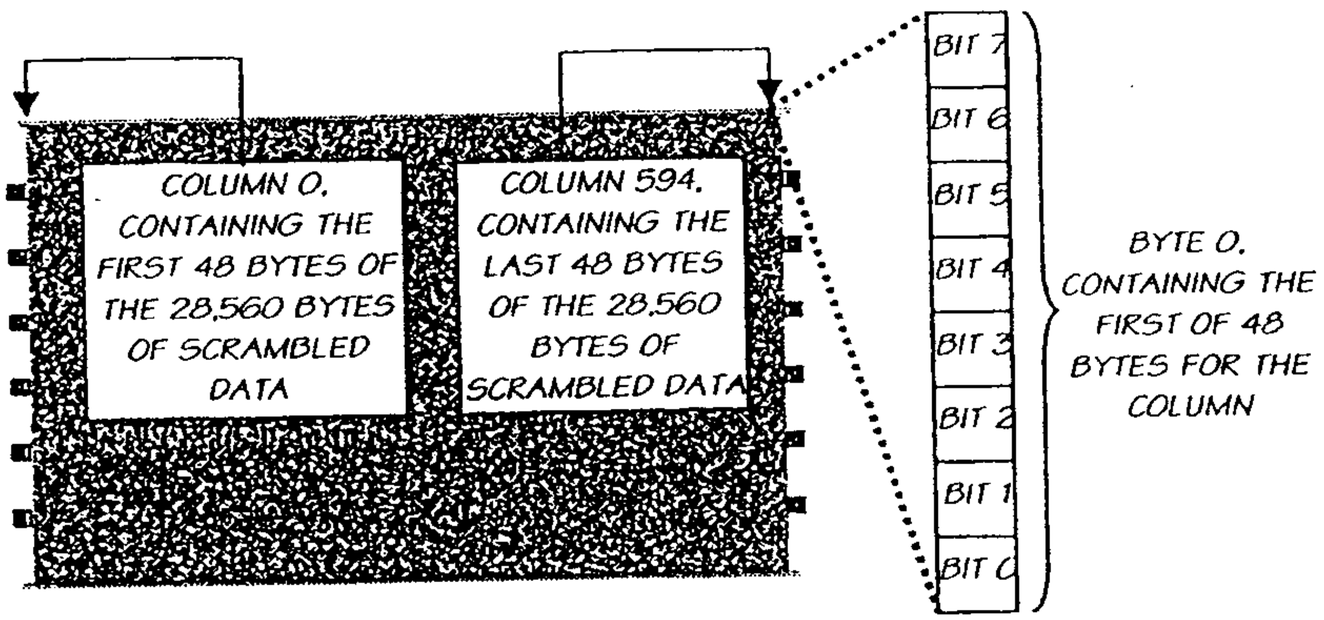
COLUMN 0, CONTAINING THE FIRST 48 BYTES OF THE 28,560 BYTES OF SCRAMBLED DATA
COLUMN 594, CONTAINING THE LAST 48 BYTES OF THE 28,560 BYTES OF SCRAMBLED DATA
BIT 7
BIT 6
BIT 5
BIT 4
BIT 3
BIT 2
BIT 1
BIT 0
BYTE 0, CONTAINING THE FIRST OF 48 BYTES FOR THE COLUMN

FIG. 61

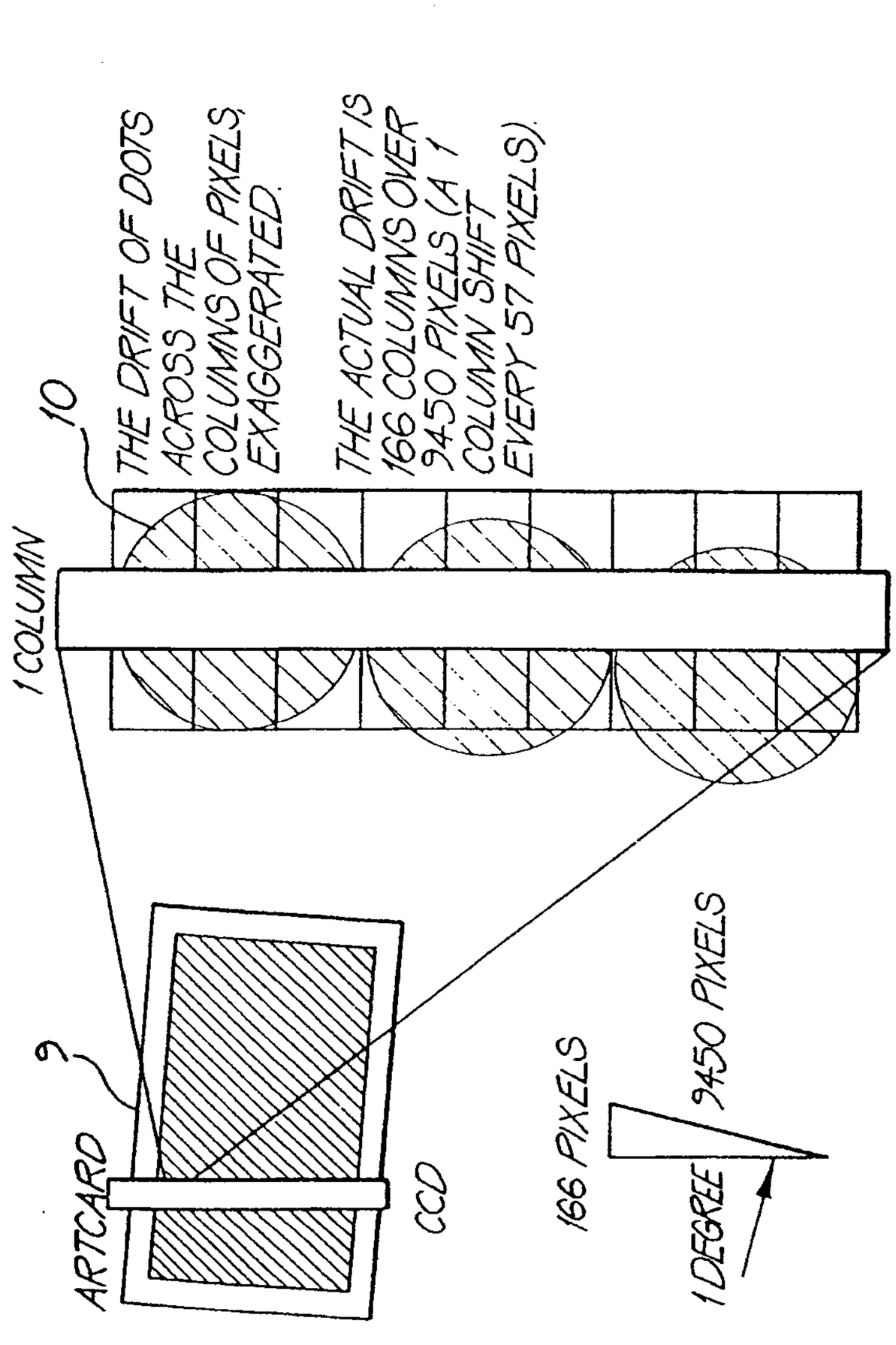
10
THE DRIFT OF DOTS ACROSS THE COLUMNS OF PIXELS EXAGGERATED.
THE ACTUAL DRIFT IS 166 COLUMNS OVER 9450 PIXELS (A 1 COLUMN SHIFT EVERY 57 PIXELS).
1 COLUMN
9
ARTCARD
CCD
166 PIXELS
9450 PIXELS
1 DEGREE

FIG. 63

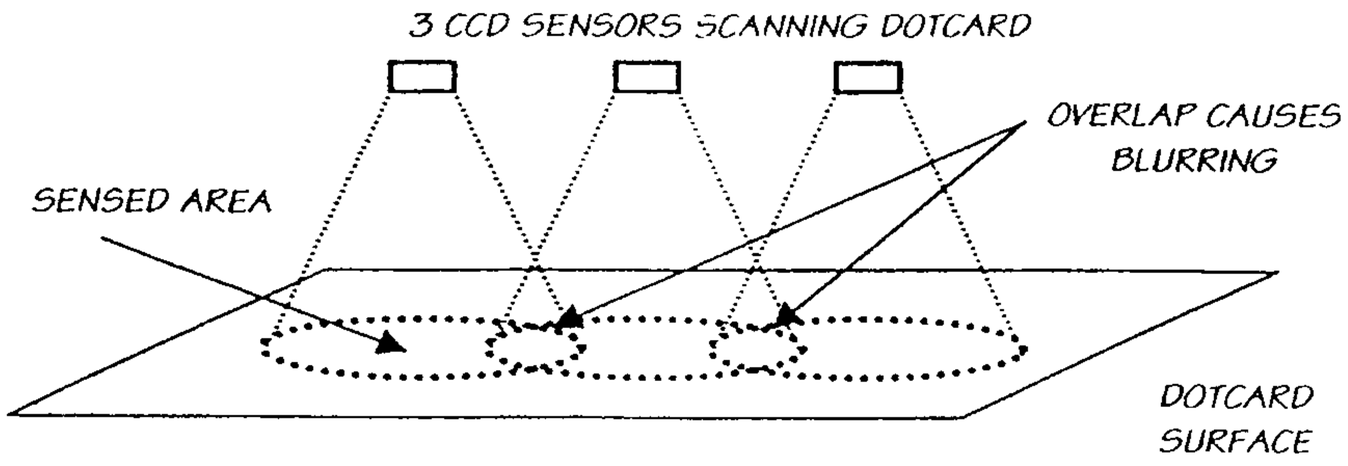
3 CCD SENSORS SCANNING DOTCARD
OVERLAP CAUSES BLURRING
SENSED AREA
DOTCARD SURFACE

FIG. 64

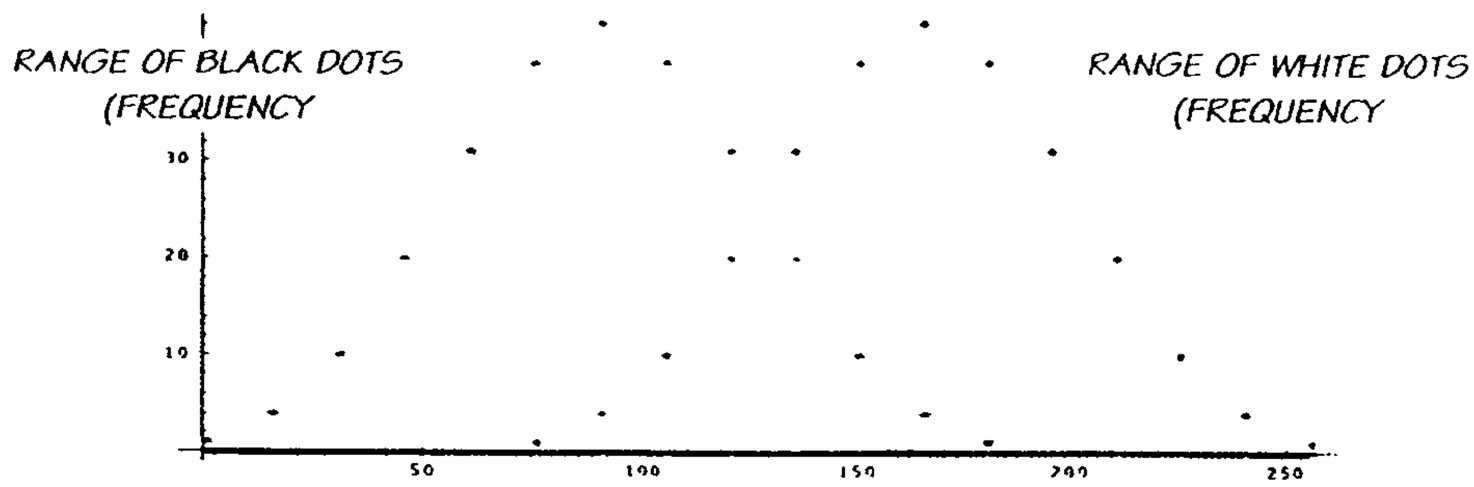
RANGE OF BLACK DOTS (FREQUENCY
RANGE OF WHITE DOTS (FREQUENCY
30
20
10
50
100
150
200
250
CENTER DOT PIXEL VALUE

FIG. 65

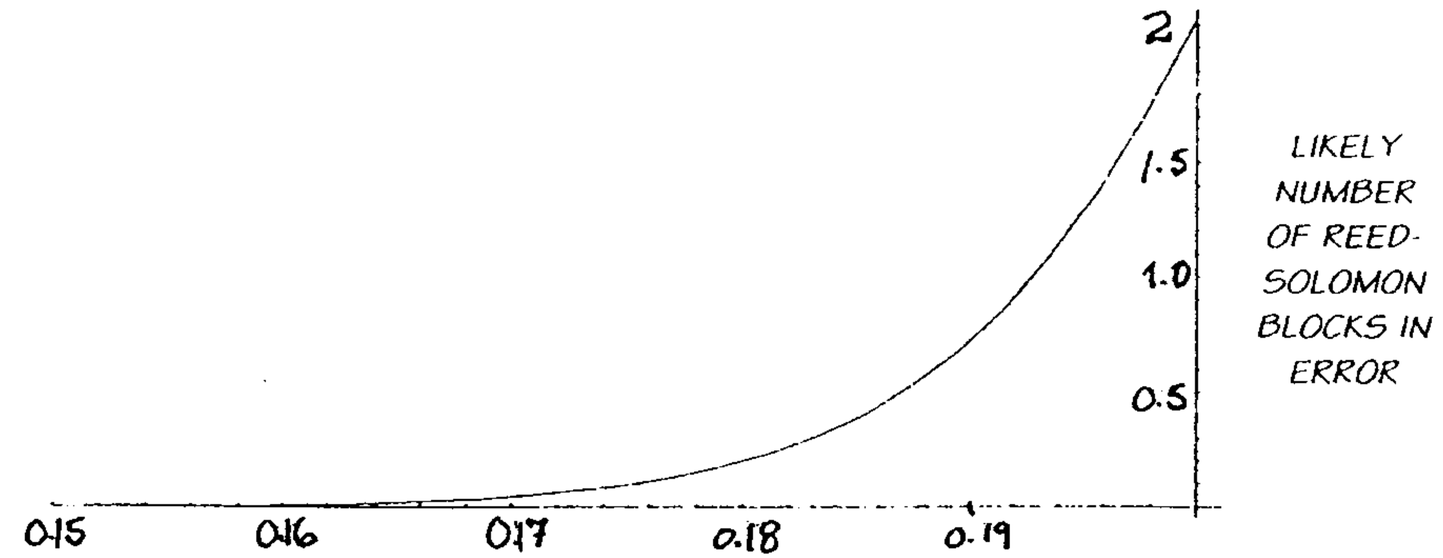
2
1.5
1.0
0.5
LIKELY NUMBER OF REED-SOLOMON BLOCKS IN ERROR
0.15
0.16
0.17
0.18
0.19
PROBABILITY OF A SYMBOL BEING IN ERROR DURING A READ

FIG. 66

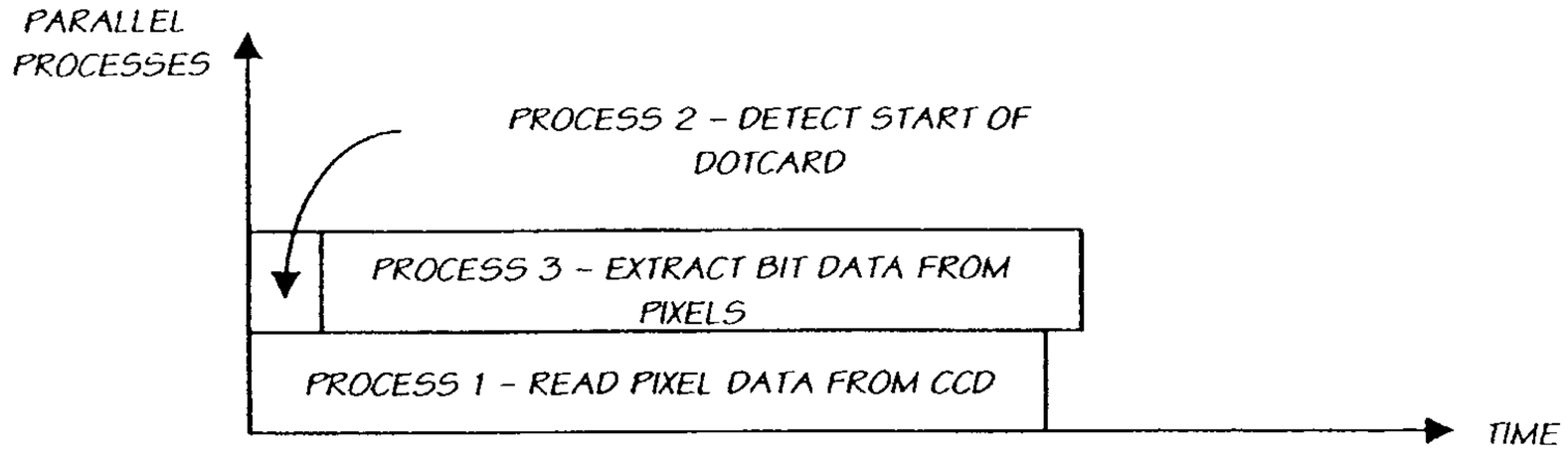
PARALLEL PROCESSES
PROCESS 2 – DETECT START OF DOTCARD
PROCESS 3 – EXTRACT BIT DATA FROM PIXELS
PROCESS 1 – READ PIXEL DATA FROM CCD
TIME

FIG. 68

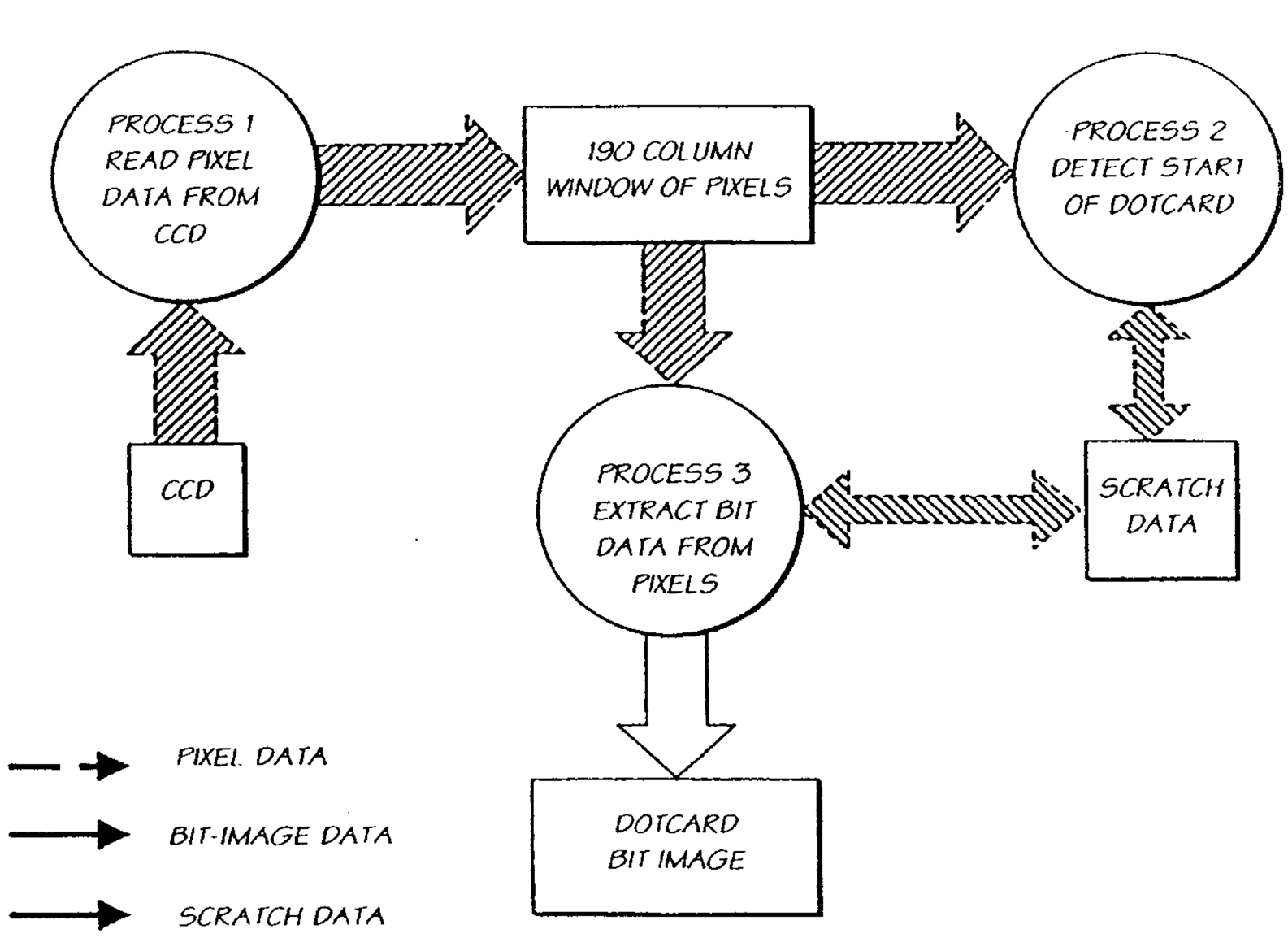
PROCESS 1 READ PIXEL DATA FROM CCD
190 COLUMN WINDOW OF PIXELS
PROCESS 2 DETECT START OF DOTCARD
CCD
PROCESS 3 EXTRACT BIT DATA FROM PIXELS
SCRATCH DATA
DOTCARD BIT IMAGE
PIXEL DATA
BIT-IMAGE DATA
SCRATCH DATA

FIG 69

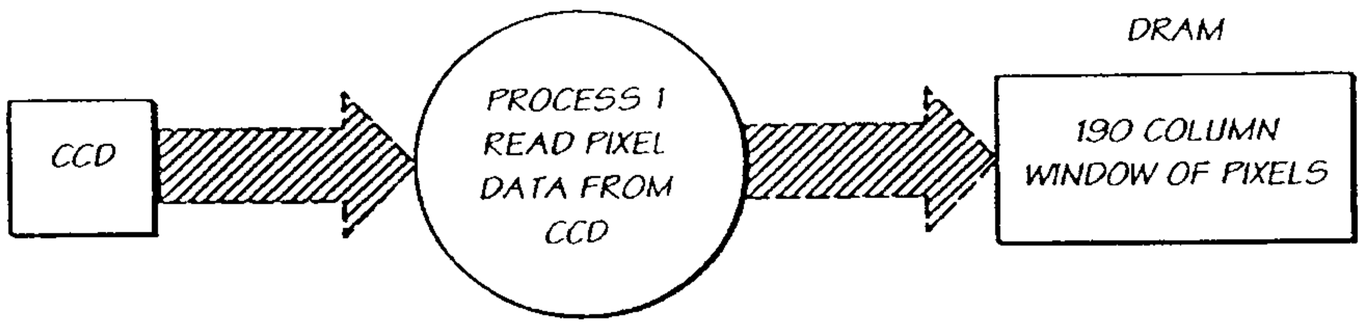

FIG. 70

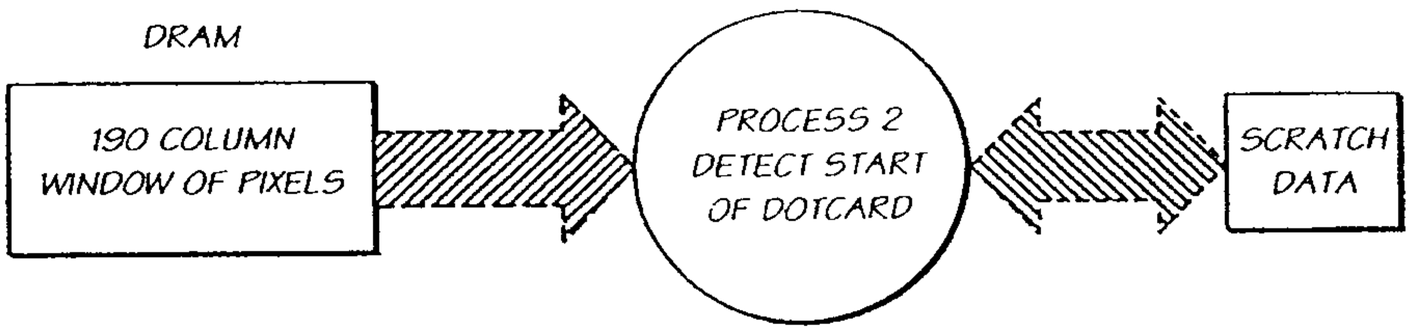

FIG. 71

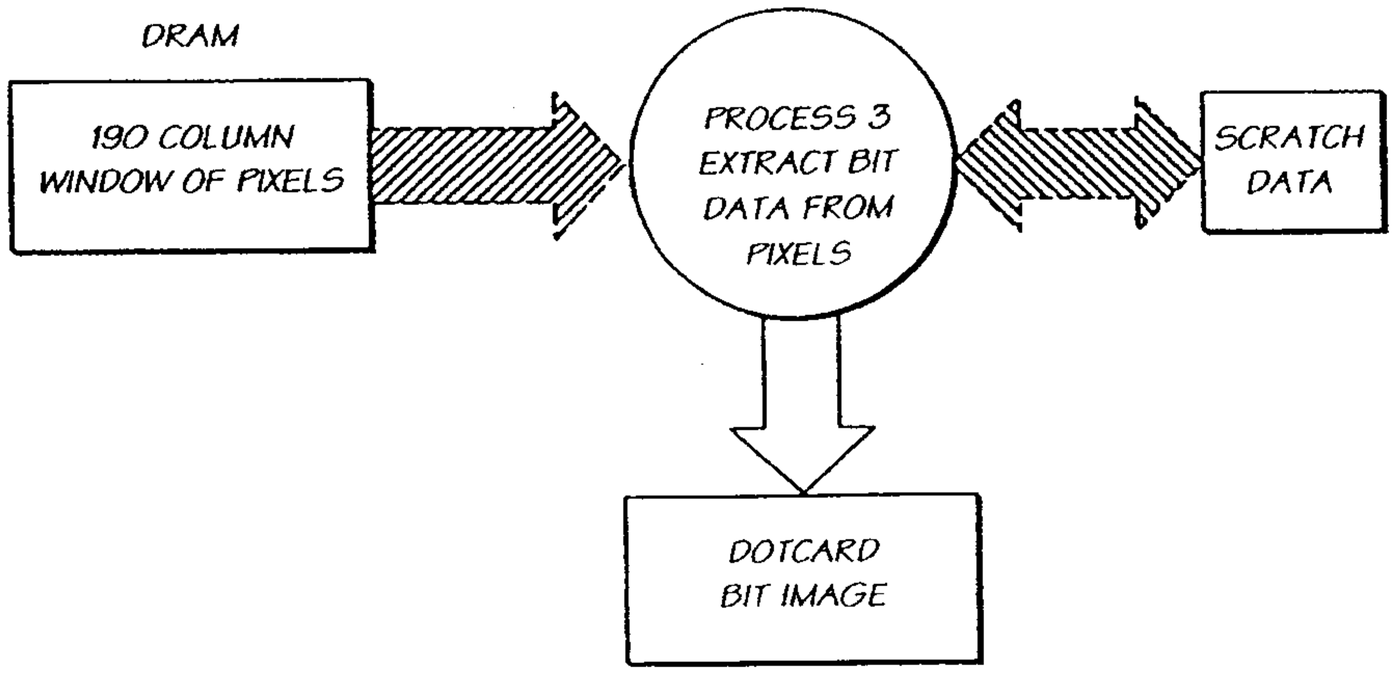

FIG. 72

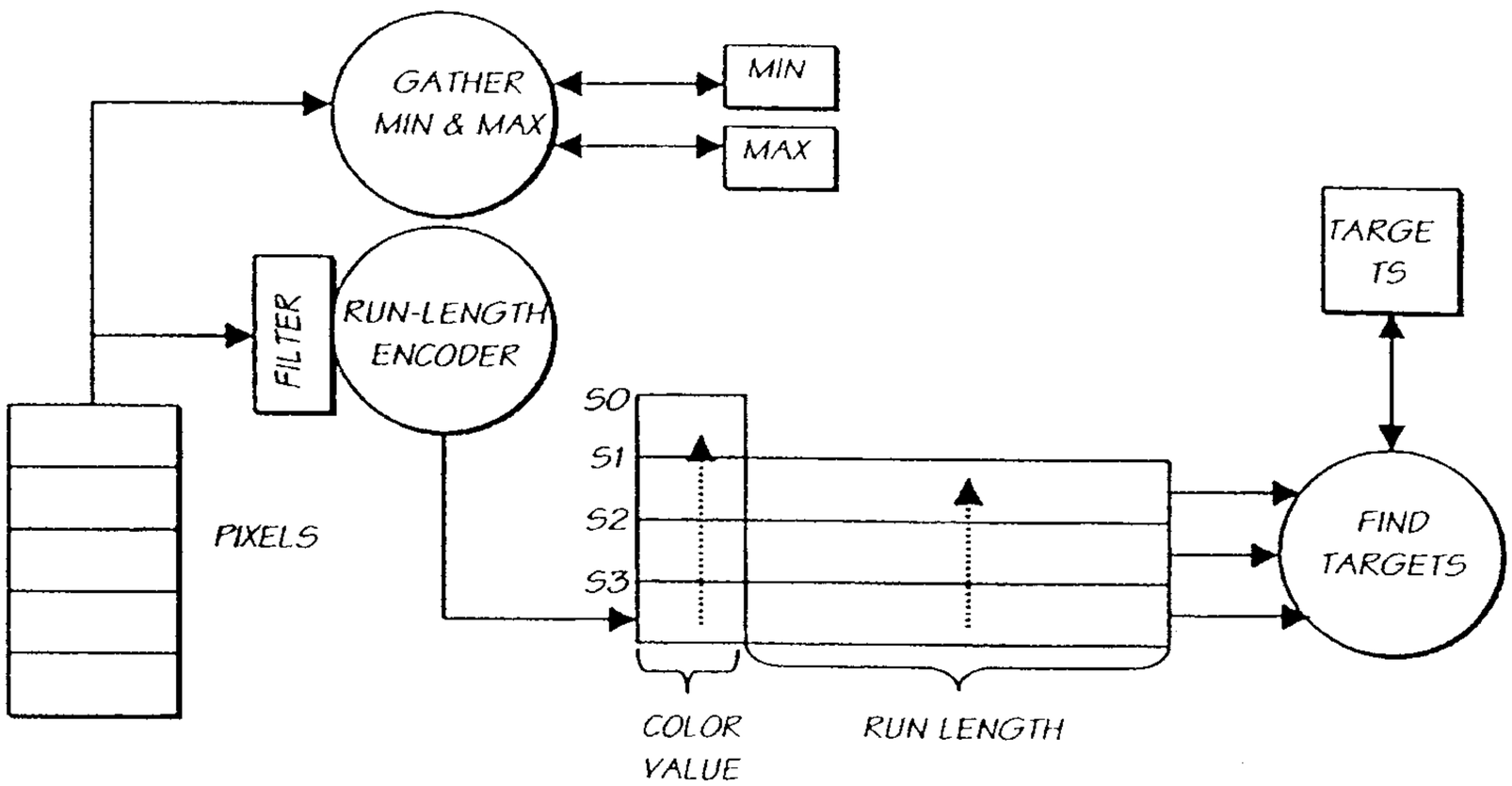
GATHER
MIN & MAX
MIN
MAX
FILTER
RUN-LENGTH
ENCODER
PIXELS
S0
S1
S2
S3
TARGE
TS
FIND
TARGETS
COLOR
VALUE
RUN LENGTH

FIG. 74

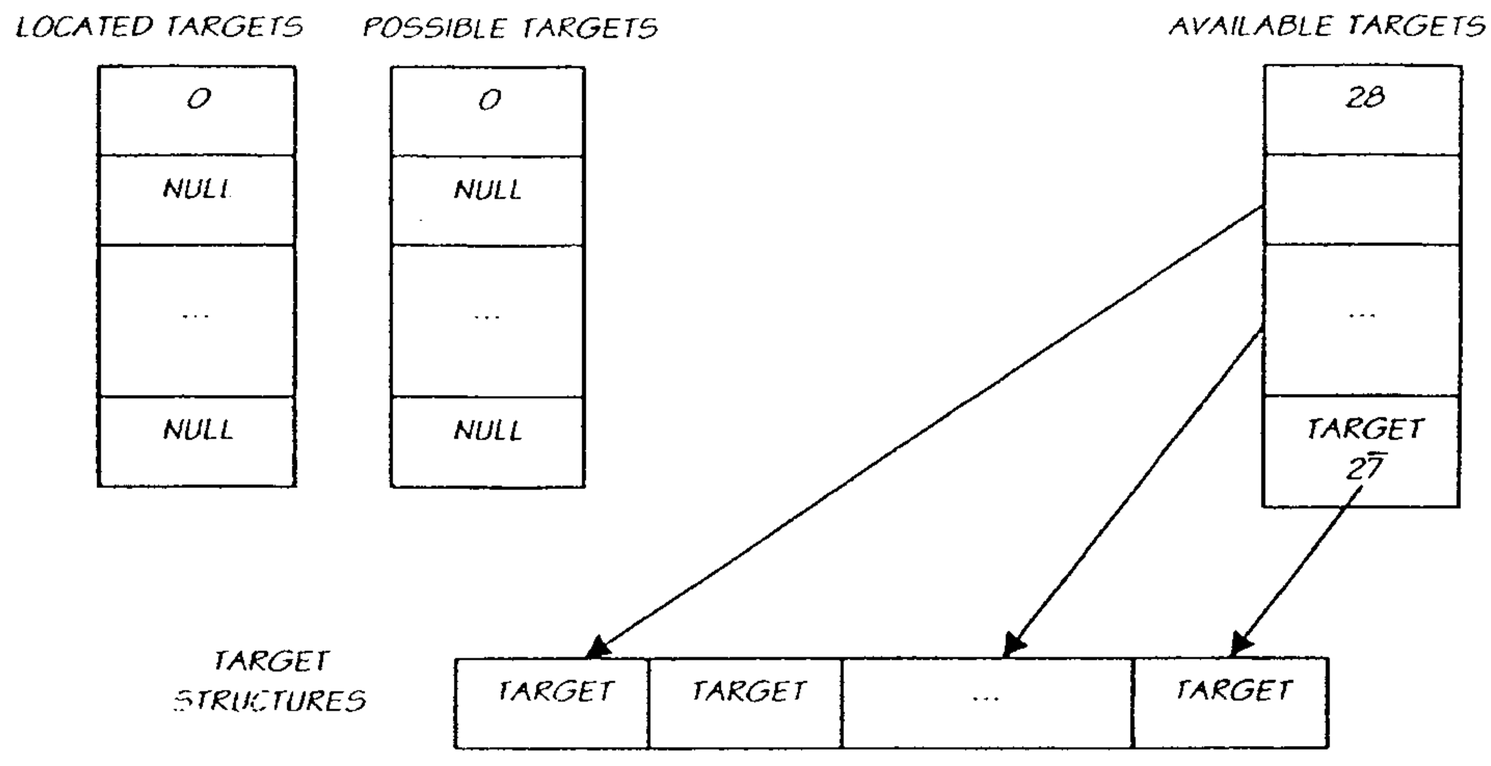

FIG. 75

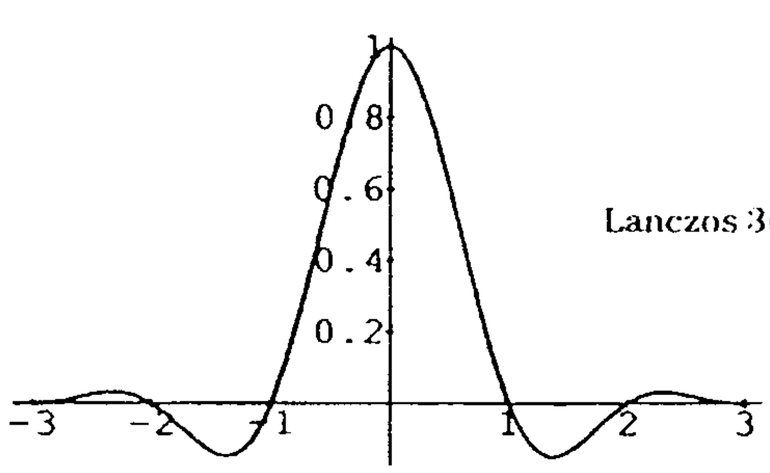

$$\text{Lanczos3}(x) = \begin{cases} \dfrac{\sin(\pi x)}{\pi x} \dfrac{\sin\left(\pi \frac{x}{3}\right)}{\pi \frac{x}{3}}, & |x| < 3 \\ 0, & |x| \geq 3 \end{cases}$$

FIG. 76

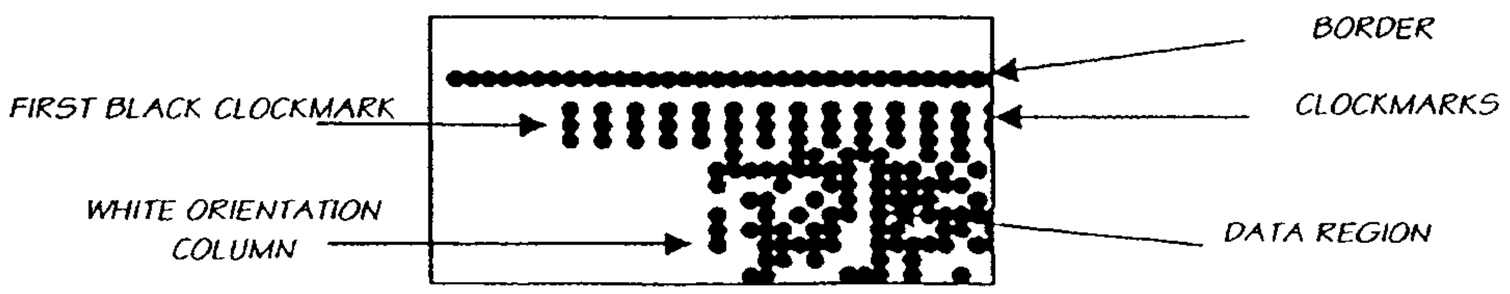

UPPER LEFT CLOCKMARKS AND BORDER

FIG. 77

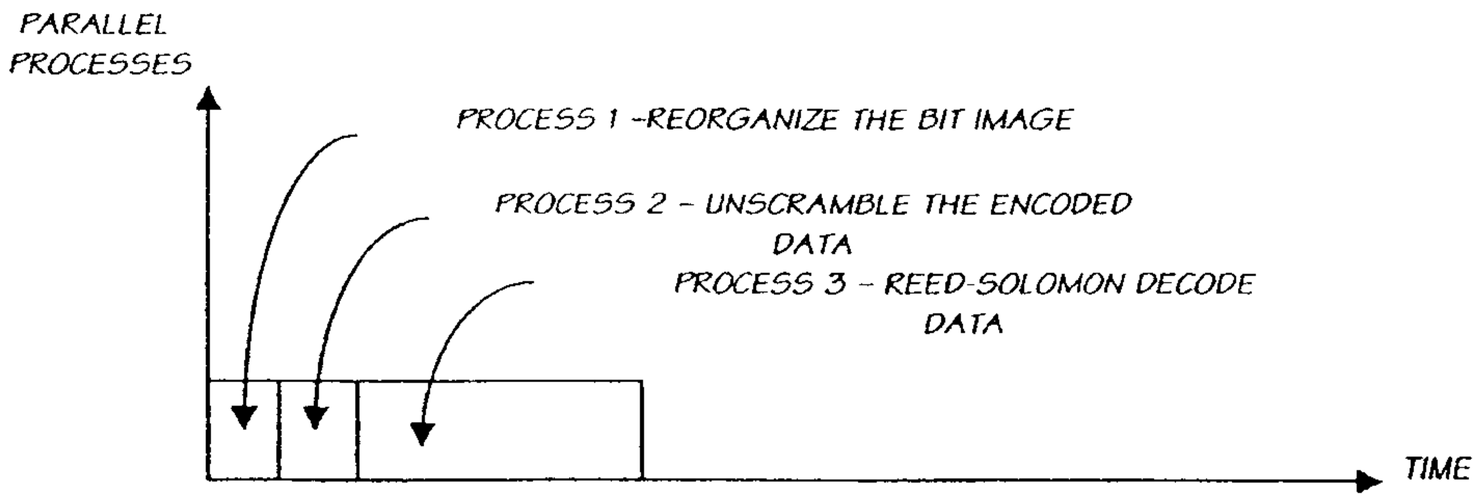
PARALLEL PROCESSES
PROCESS 1 -REORGANIZE THE BIT IMAGE
PROCESS 2 - UNSCRAMBLE THE ENCODED DATA
PROCESS 3 - REED-SOLOMON DECODE DATA
TIME

FIG. 78

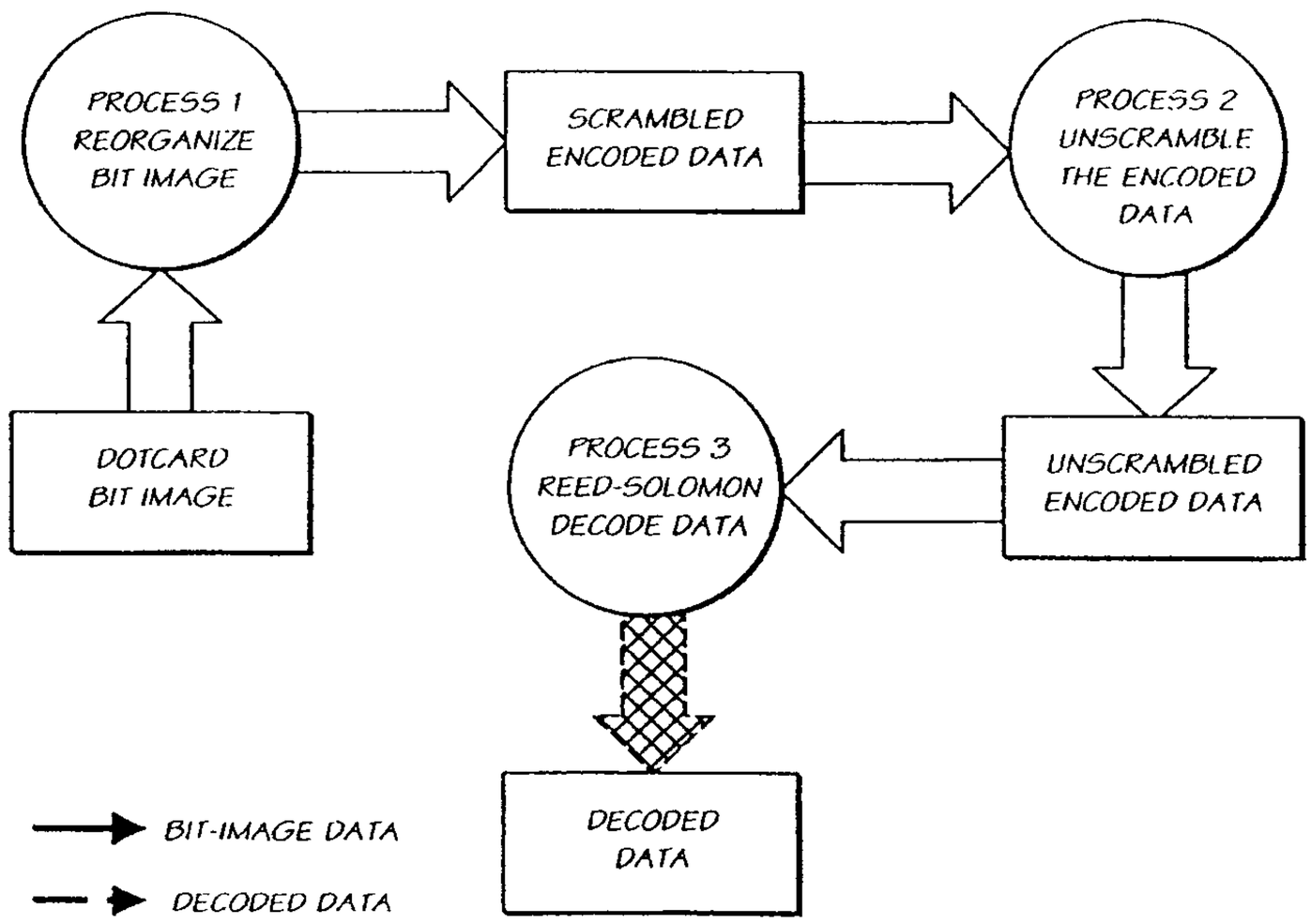
PROCESS 1 REORGANIZE BIT IMAGE
SCRAMBLED ENCODED DATA
PROCESS 2 UNSCRAMBLE THE ENCODED DATA
DOTCARD BIT IMAGE
PROCESS 3 REED-SOLOMON DECODE DATA
UNSCRAMBLED ENCODED DATA
DECODED DATA
BIT-IMAGE DATA
DECODED DATA

FIG. 79

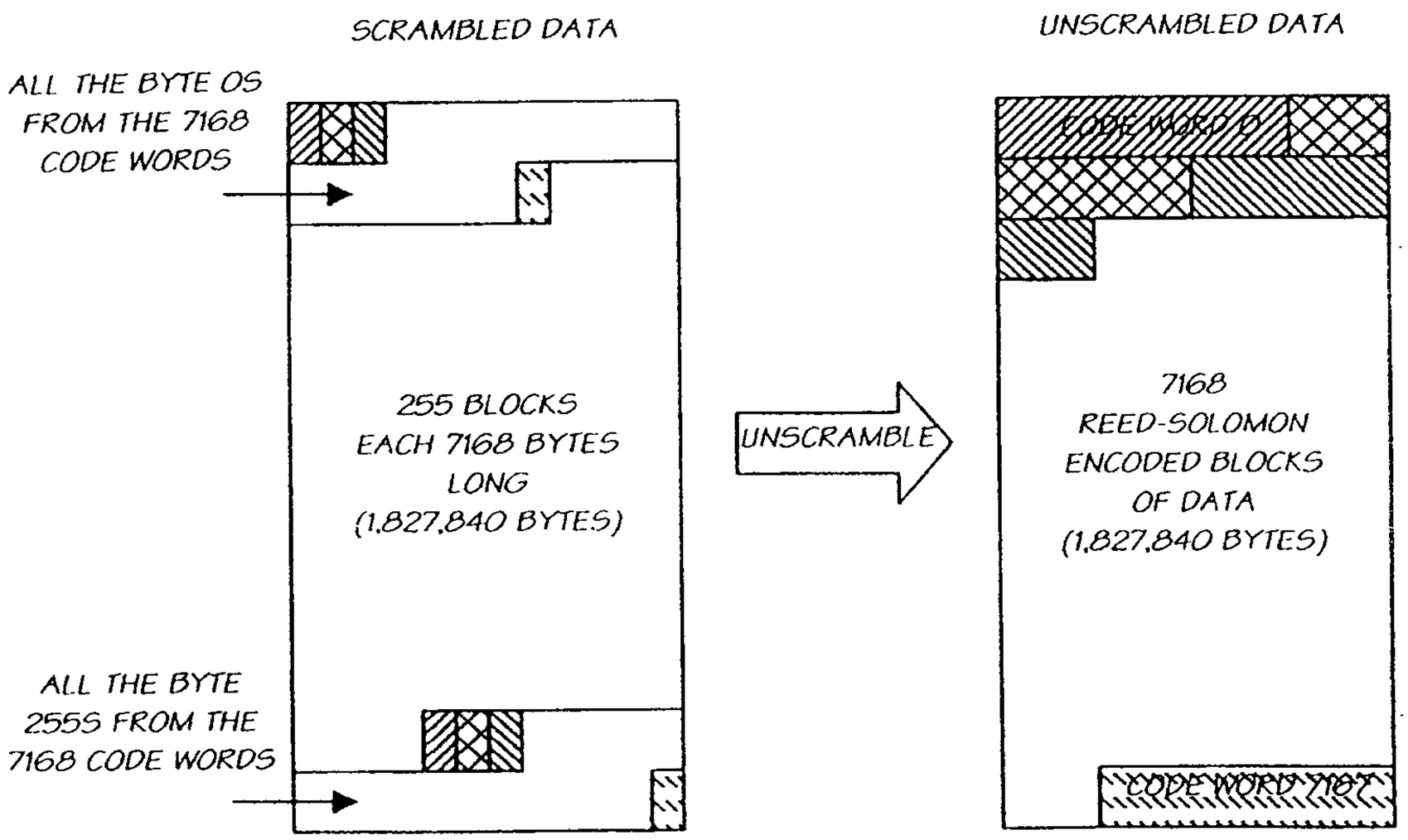
SCRAMBLED DATA
UNSCRAMBLED DATA
ALL THE BYTE OS FROM THE 7168 CODE WORDS
255 BLOCKS EACH 7168 BYTES LONG (1,827,840 BYTES)
UNSCRAMBLE
CODE WORD 0
7168 REED-SOLOMON ENCODED BLOCKS OF DATA (1,827,840 BYTES)
ALL THE BYTE 255S FROM THE 7168 CODE WORDS
CODE WORD 7167

FIG. 80

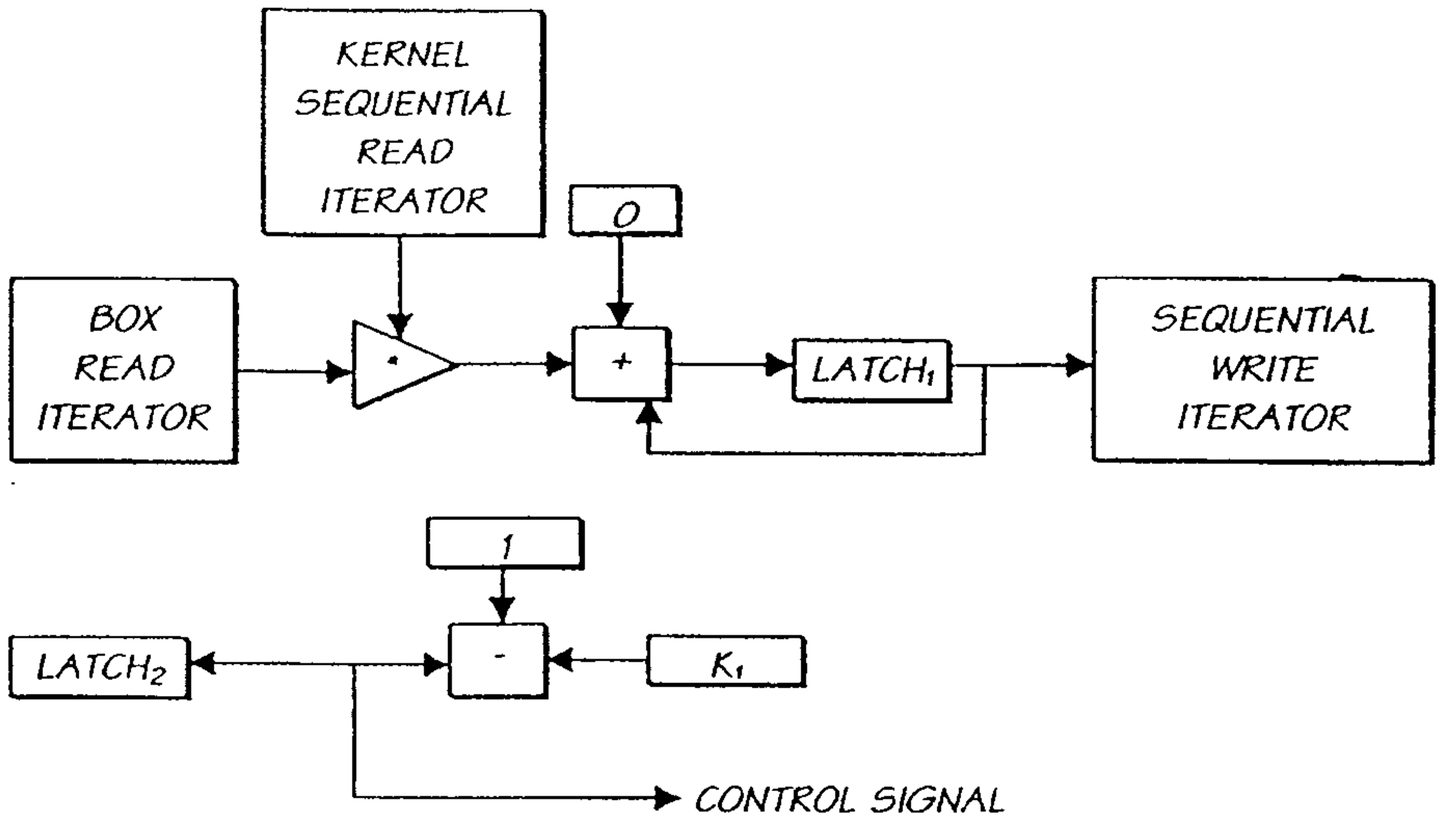
KERNEL SEQUENTIAL READ ITERATOR
0
BOX READ ITERATOR
*
+
LATCH1
SEQUENTIAL WRITE ITERATOR
1
LATCH2
-
K1
CONTROL SIGNAL

FIG. 81

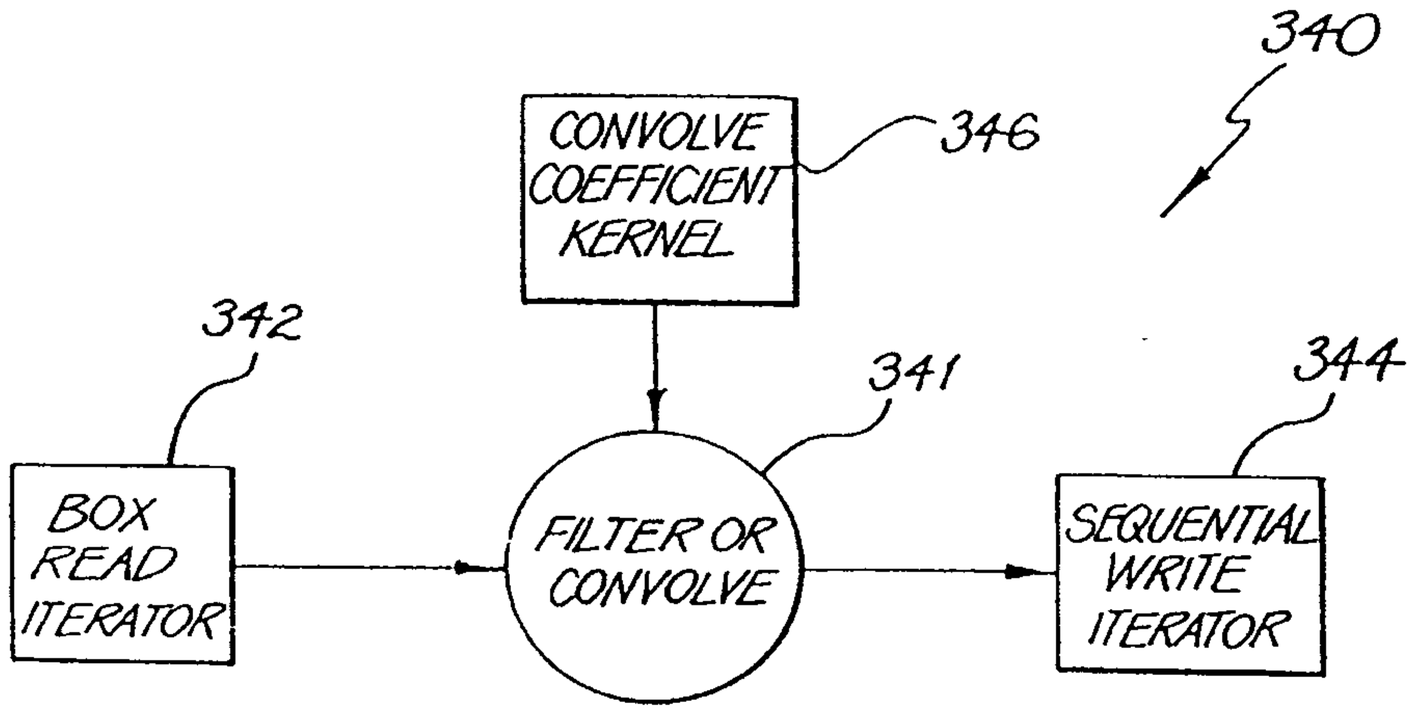
340
CONVOLVE COEFFICIENT KERNEL
346
342
341
344
BOX READ ITERATOR
FILTER OR CONVOLVE
SEQUENTIAL WRITE ITERATOR

FIG. 82

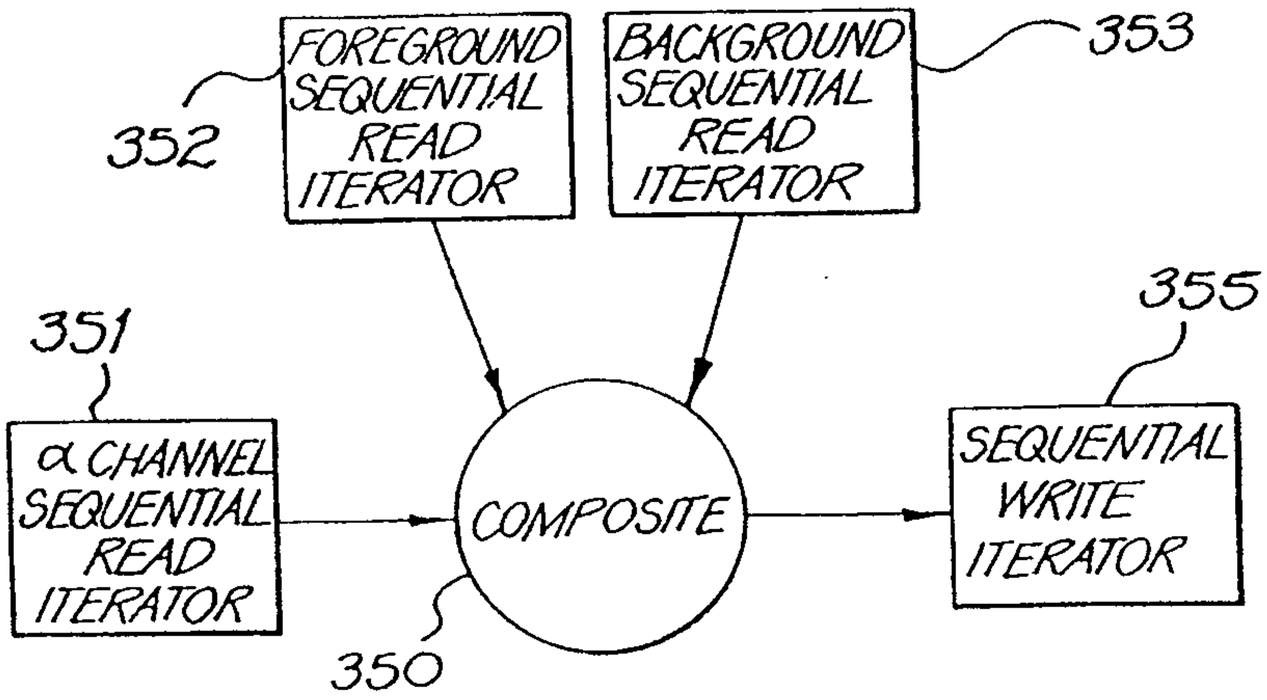
FOREGROUND SEQUENTIAL READ ITERATOR
352
BACKGROUND SEQUENTIAL READ ITERATOR
353
355
351
α CHANNEL SEQUENTIAL READ ITERATOR
COMPOSITE
SEQUENTIAL WRITE ITERATOR
350

FIG. 83

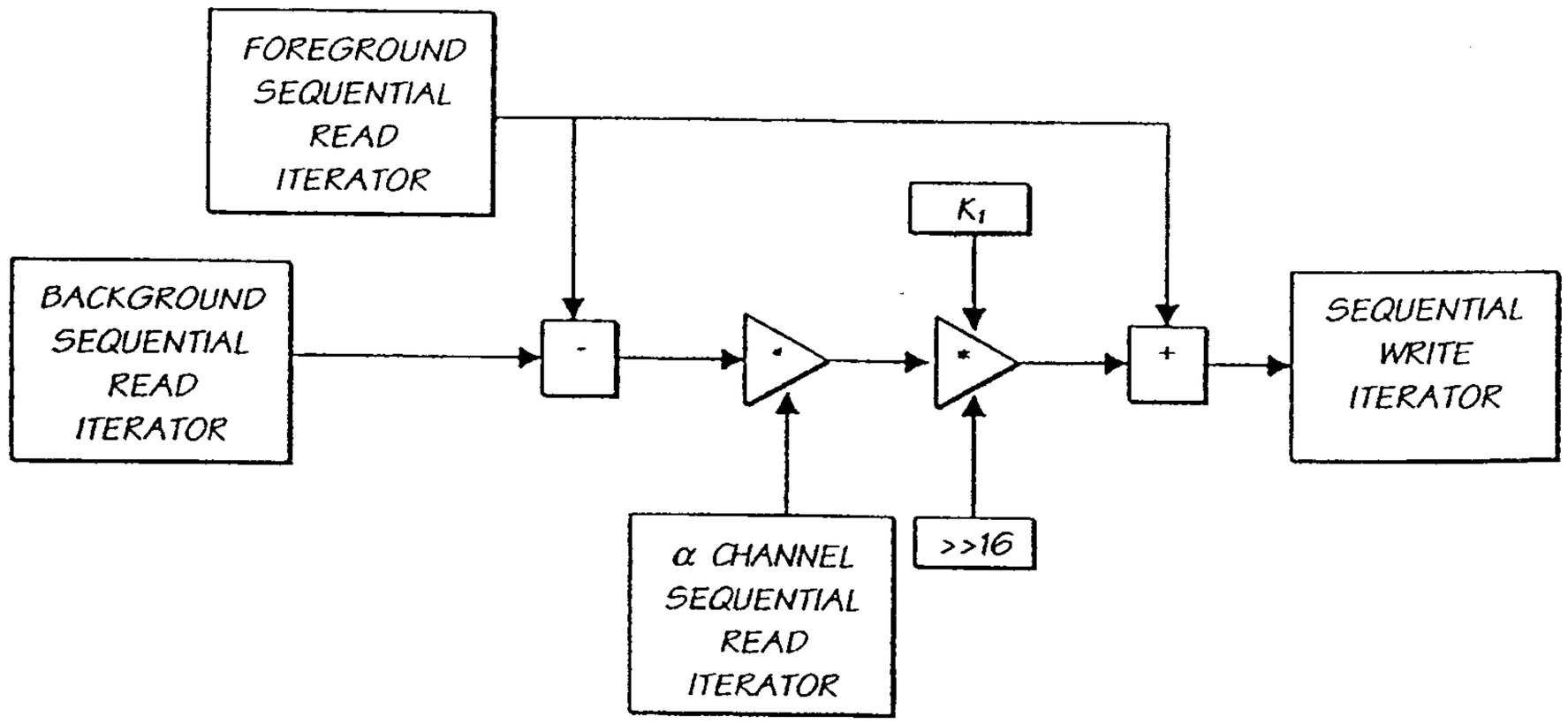
FOREGROUND SEQUENTIAL READ ITERATOR
BACKGROUND SEQUENTIAL READ ITERATOR
-
*
K1
*
+
SEQUENTIAL WRITE ITERATOR
α CHANNEL SEQUENTIAL READ ITERATOR
>>16

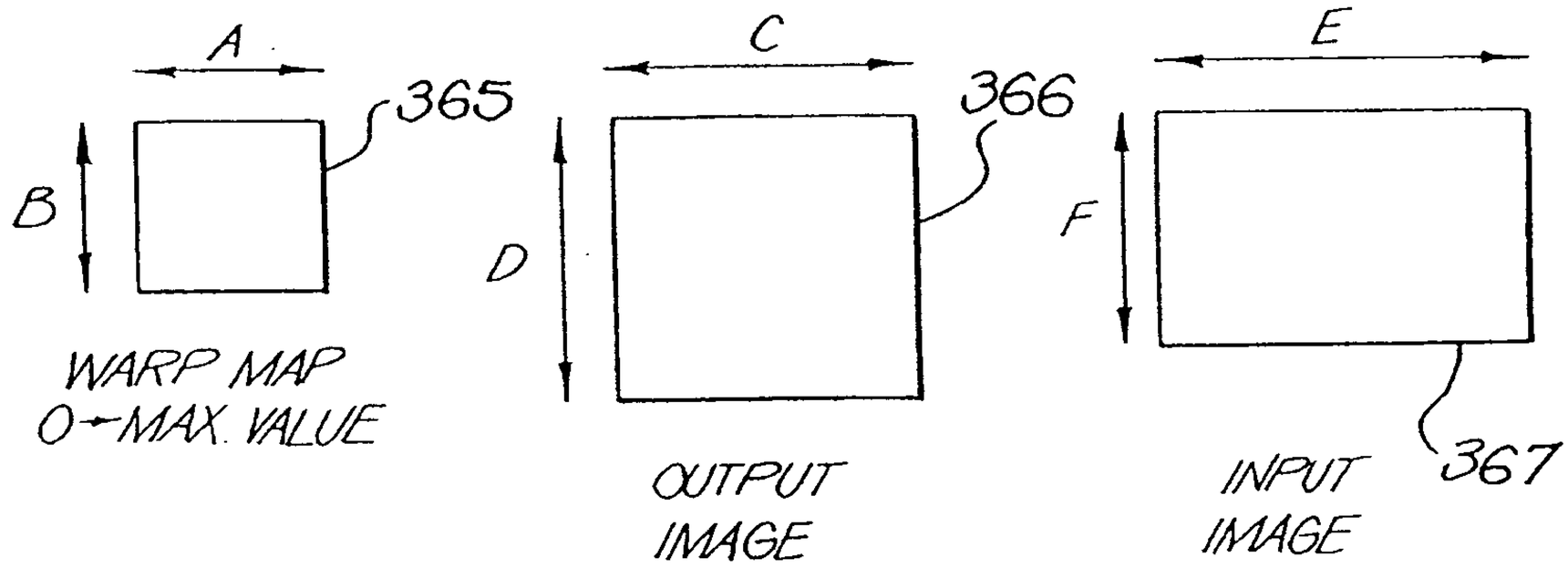
A
365
B
WARP MAP
0→MAX. VALUE
C
366
D
OUTPUT
IMAGE
E
F
INPUT
IMAGE
367

FIG. 85

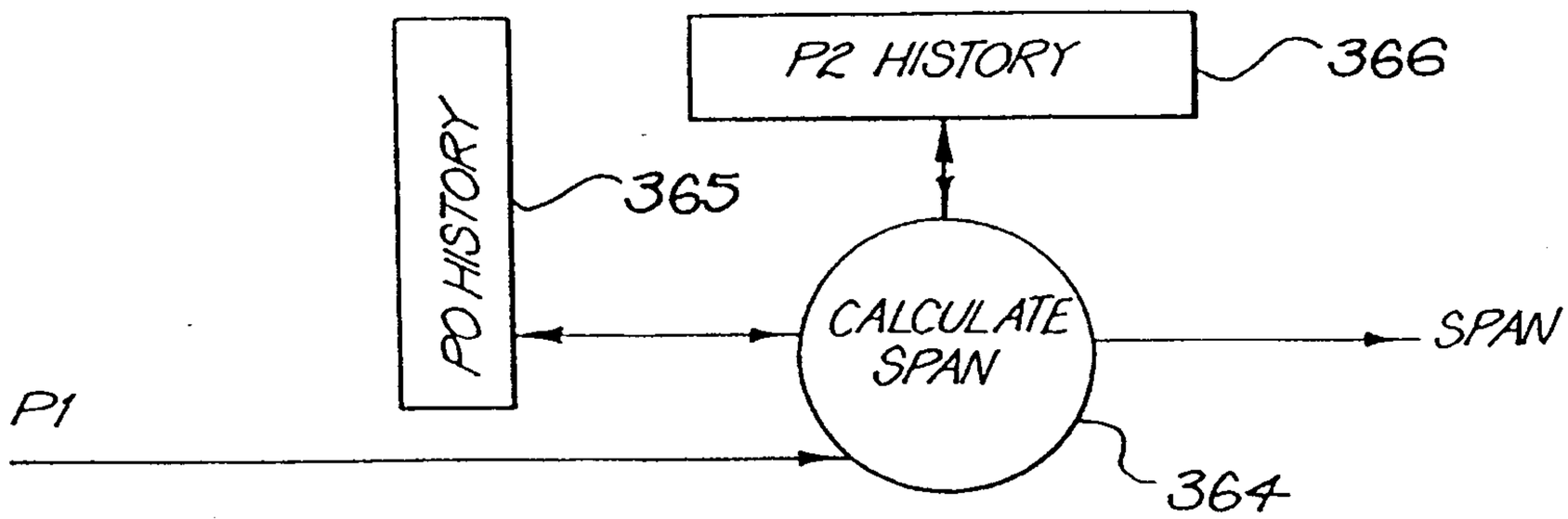
P2 HISTORY
366
P0 HISTORY
365
CALCULATE
SPAN
SPAN
P1
364

FIG. 86

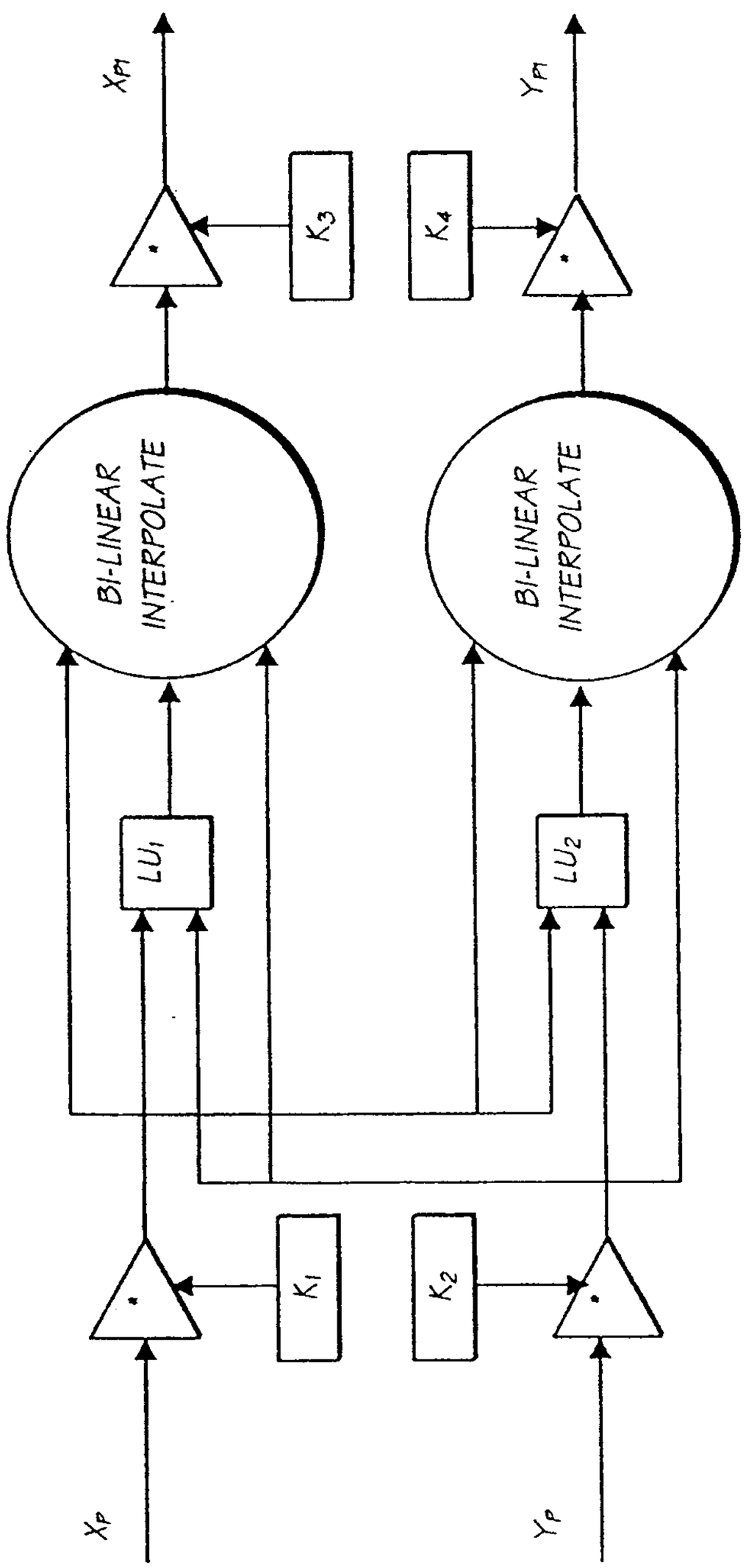
X_{P1}
Y_{P1}
K_3
K_4
BI-LINEAR INTERPOLATE
BI-LINEAR INTERPOLATE
LU_1
LU_2
K_1
K_2
X_P
Y_P

FIG. 87

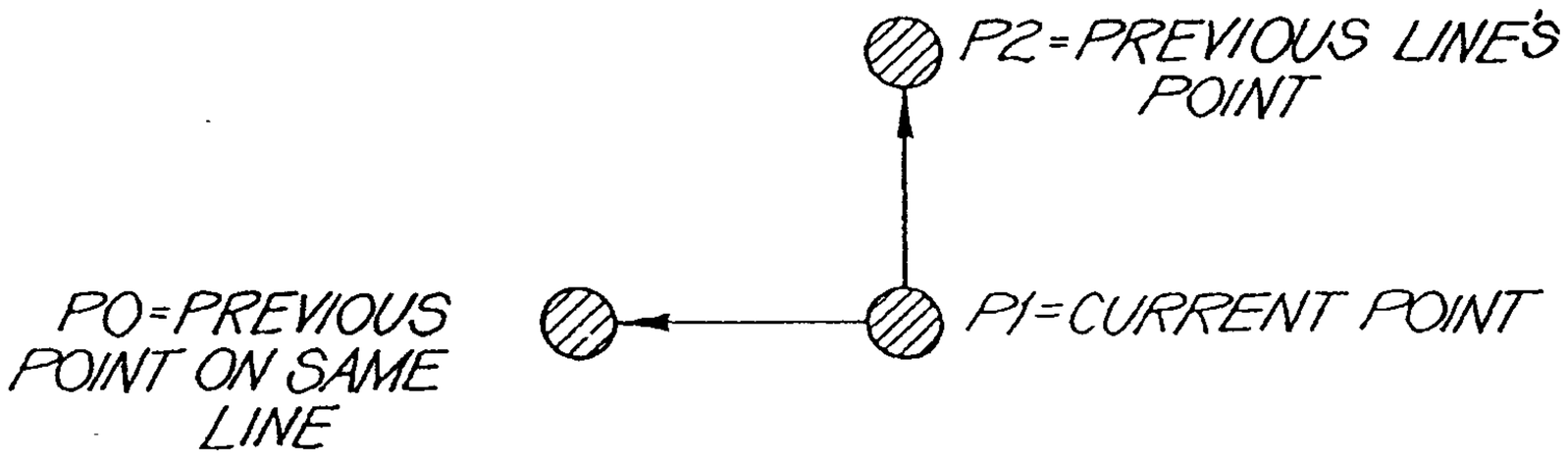
P2=PREVIOUS LINE'S POINT
P0=PREVIOUS POINT ON SAME LINE
P1=CURRENT POINT

FIG. 88

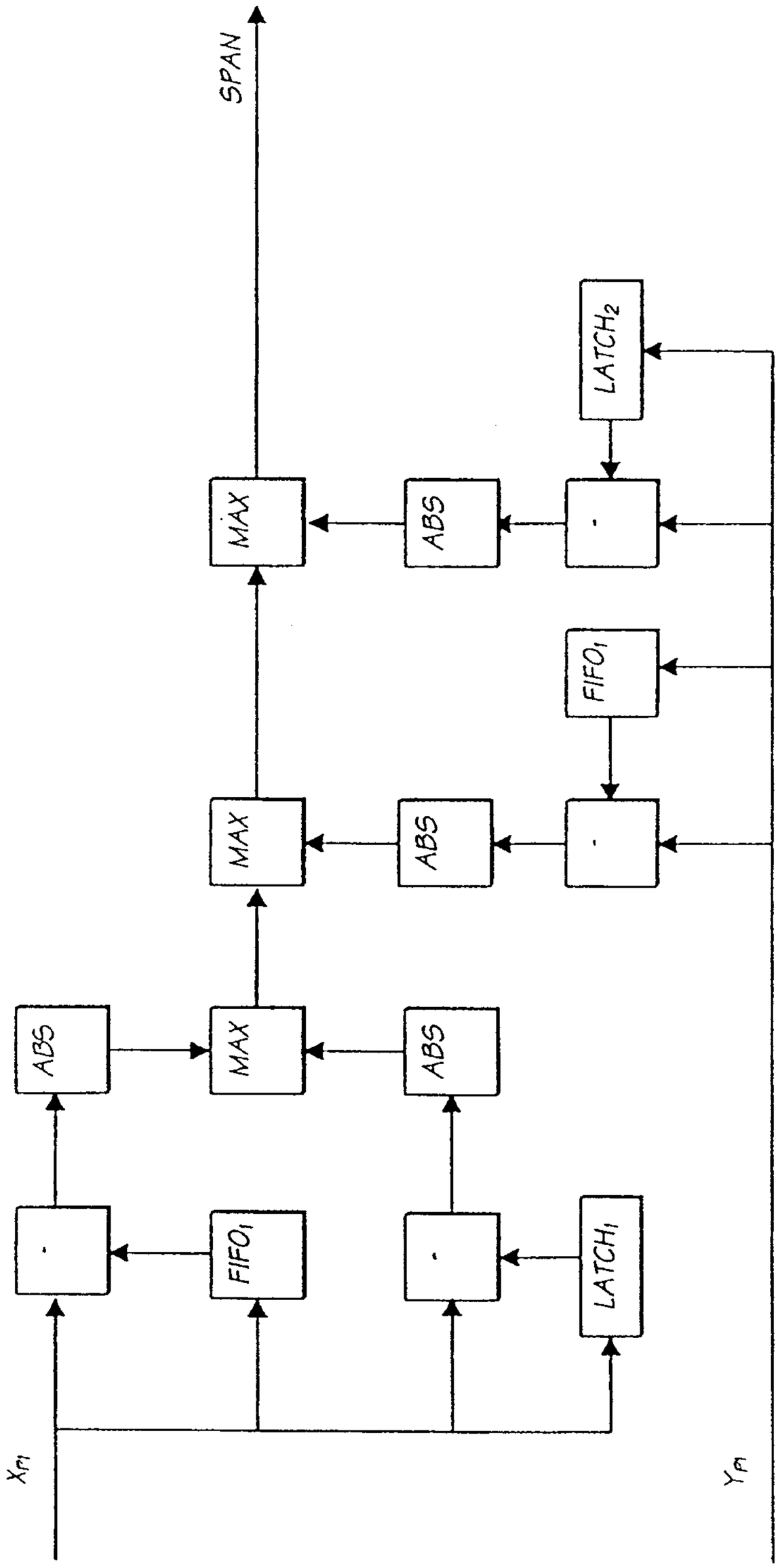
SPAN
MAX
ABS
-
LATCH2
MAX
ABS
-
FIFO1
MAX
ABS
-
FIFO1
ABS
MAX
ABS
-
FIFO1
-
LATCH1
XM1
YM

FIG. 89

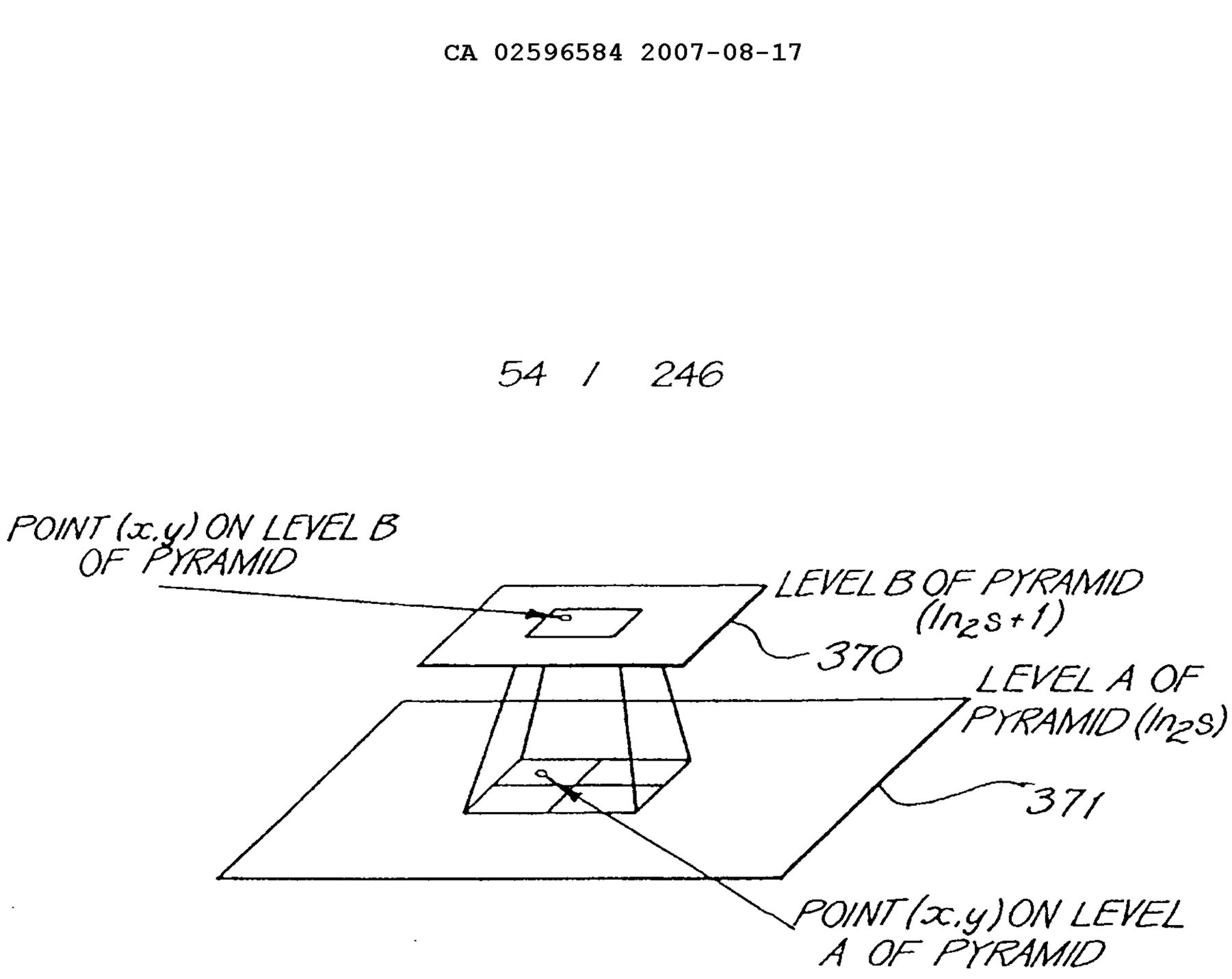
POINT (x,y) ON LEVEL B OF PYRAMID
LEVEL B OF PYRAMID ($ln_2 s+1$)
370
LEVEL A OF PYRAMID ($ln_2 s$)
371
POINT (x,y) ON LEVEL A OF PYRAMID

FIG. 90

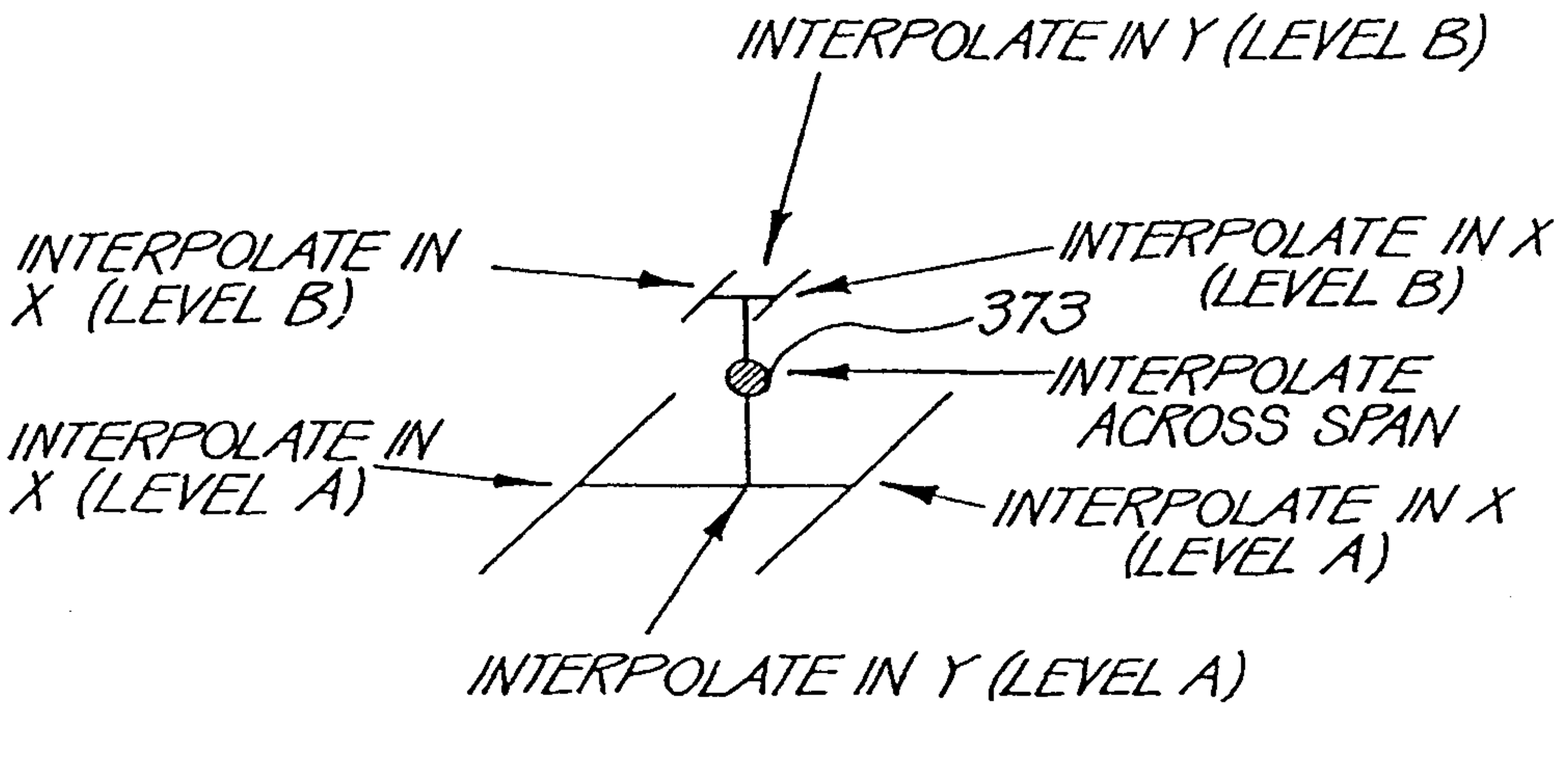
INTERPOLATE IN Y (LEVEL B)
INTERPOLATE IN X (LEVEL B)
INTERPOLATE IN X (LEVEL B)
373
INTERPOLATE ACROSS SPAN
INTERPOLATE IN X (LEVEL A)
INTERPOLATE IN X (LEVEL A)
INTERPOLATE IN Y (LEVEL A)

FIG. 91

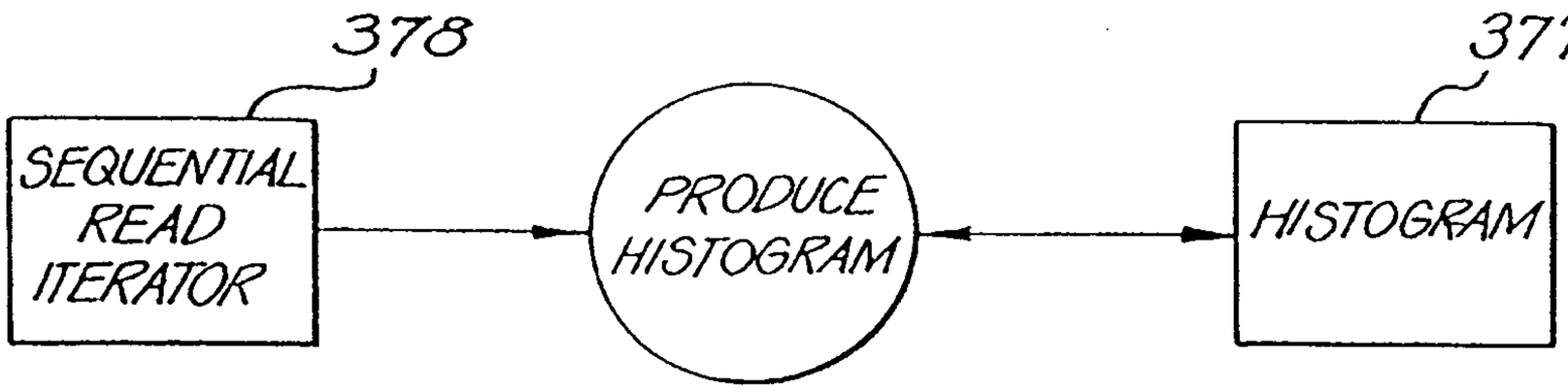
378
SEQUENTIAL READ ITERATOR
PRODUCE HISTOGRAM
377
HISTOGRAM

FIG. 92

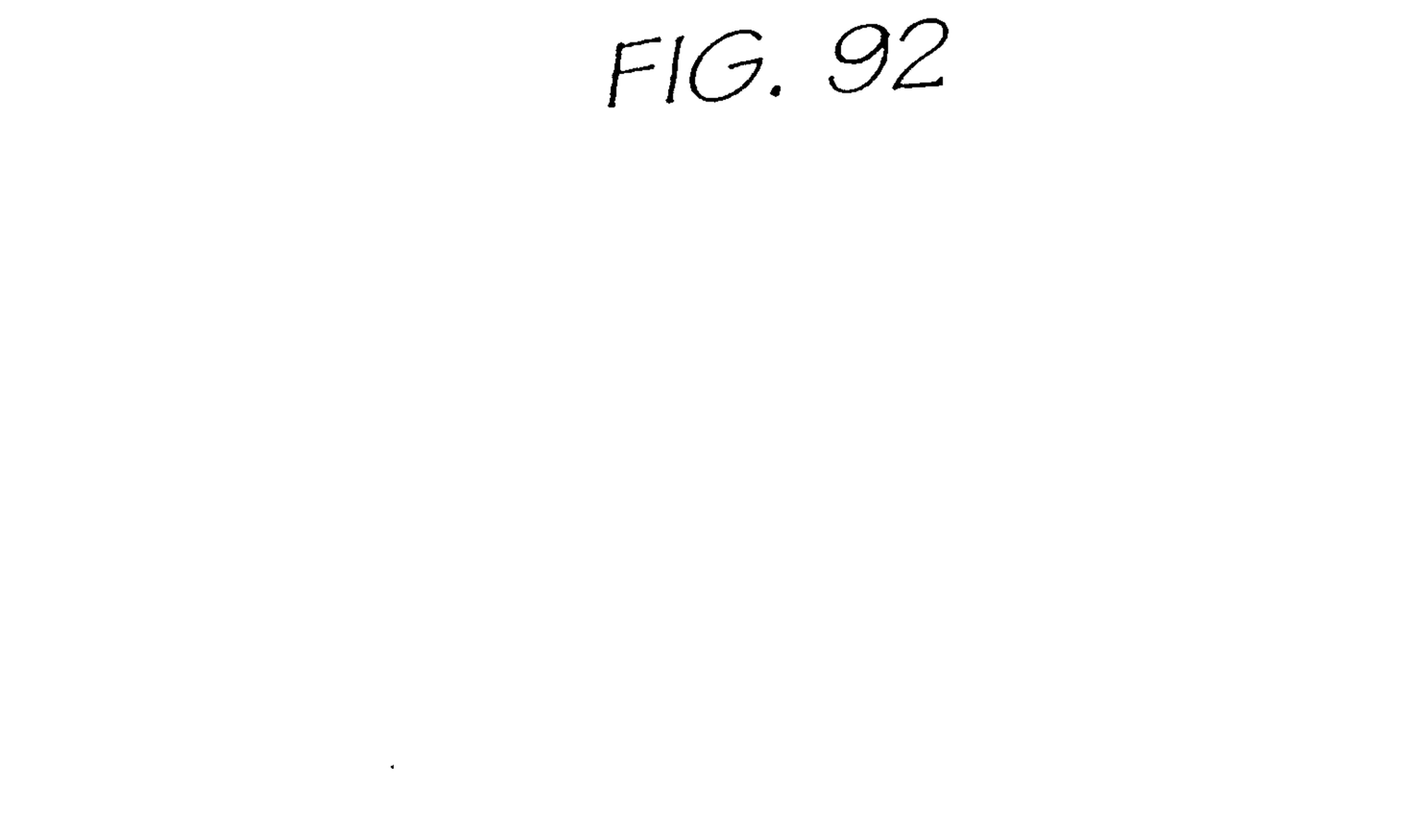
NEW COLOR TABLE
380
382
SEQUENTIAL READ ITERATOR
LOOKUP COLOR
381
383
SEQUENTIAL WRITE ITERATOR

FIG. 93

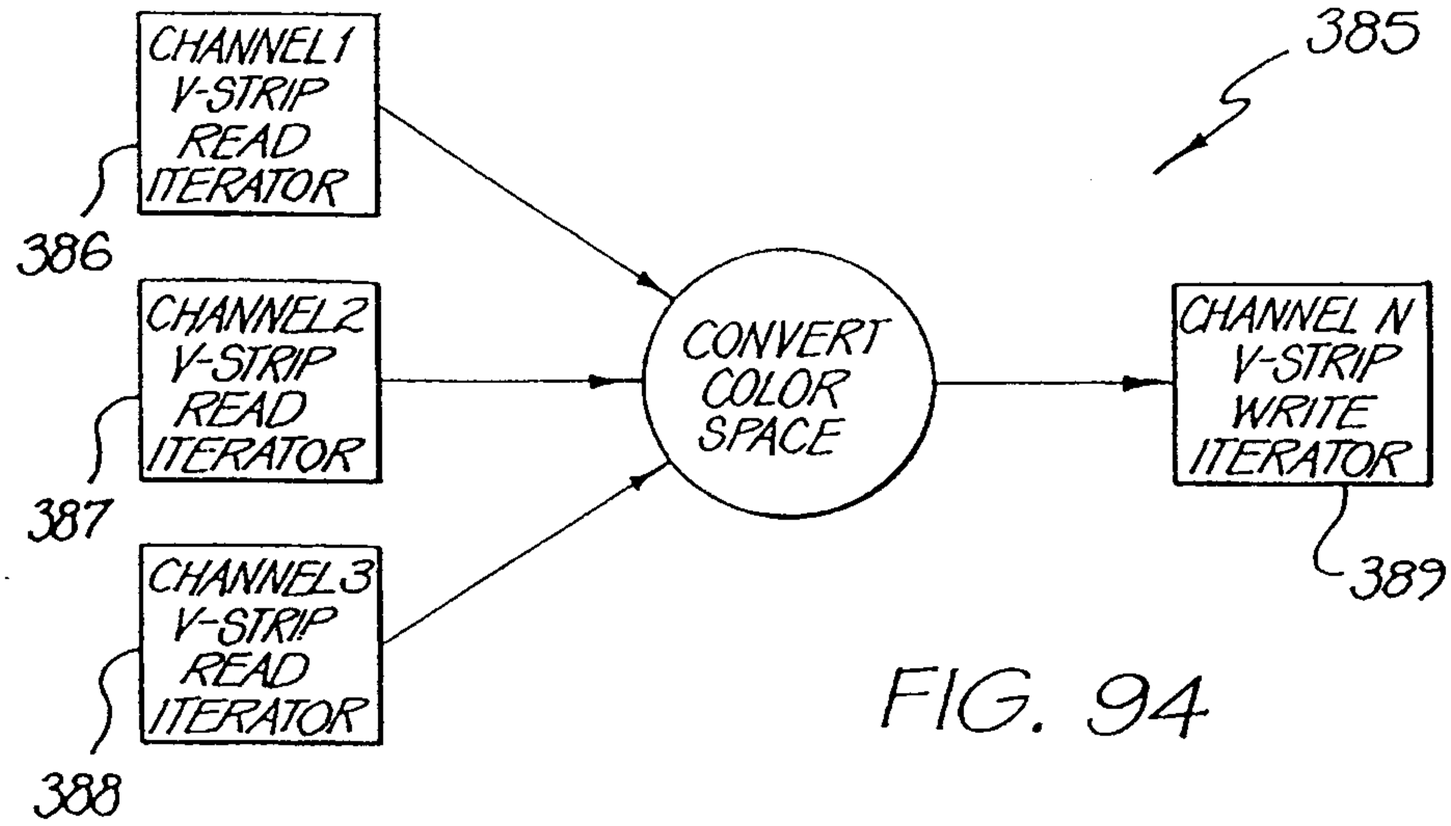

FIG. 94

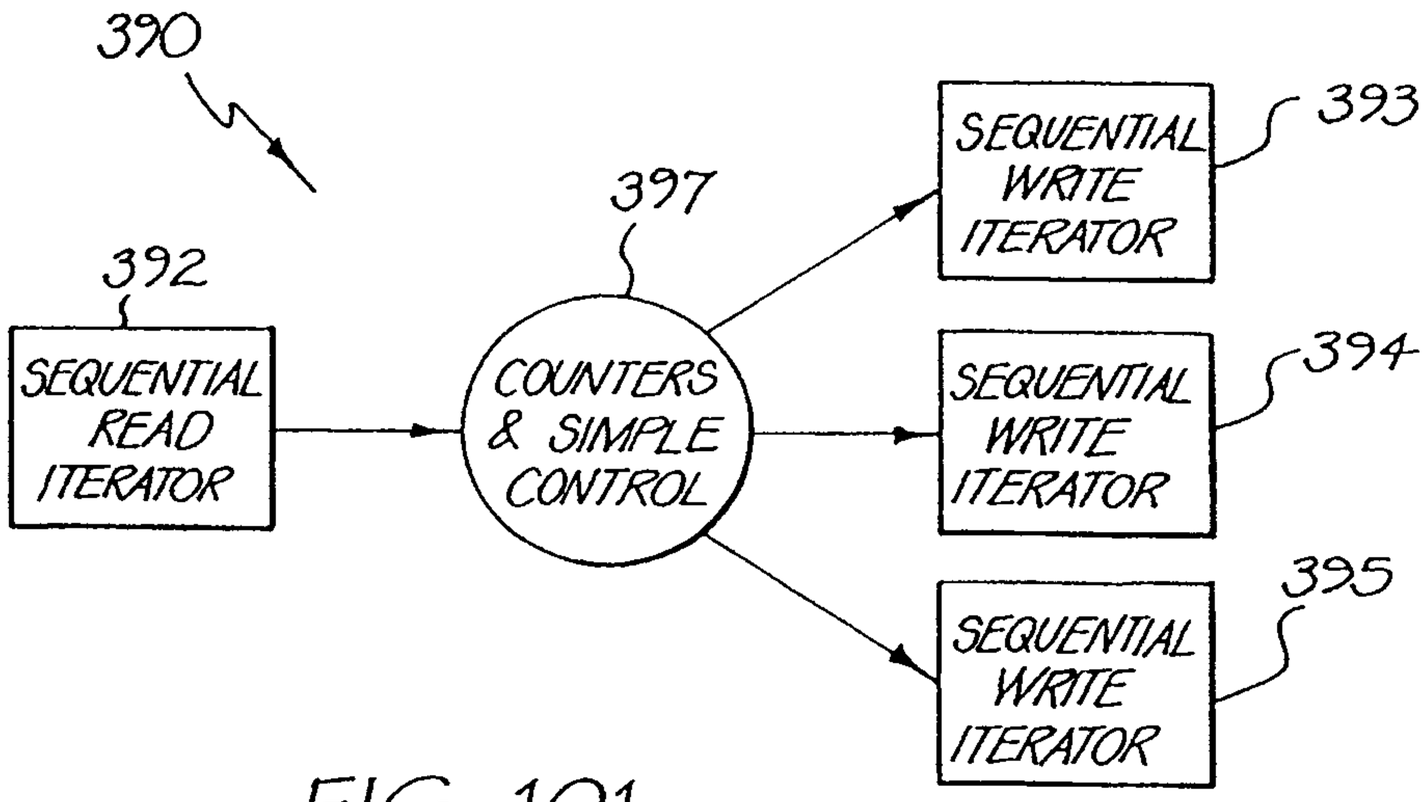

FIG. 101

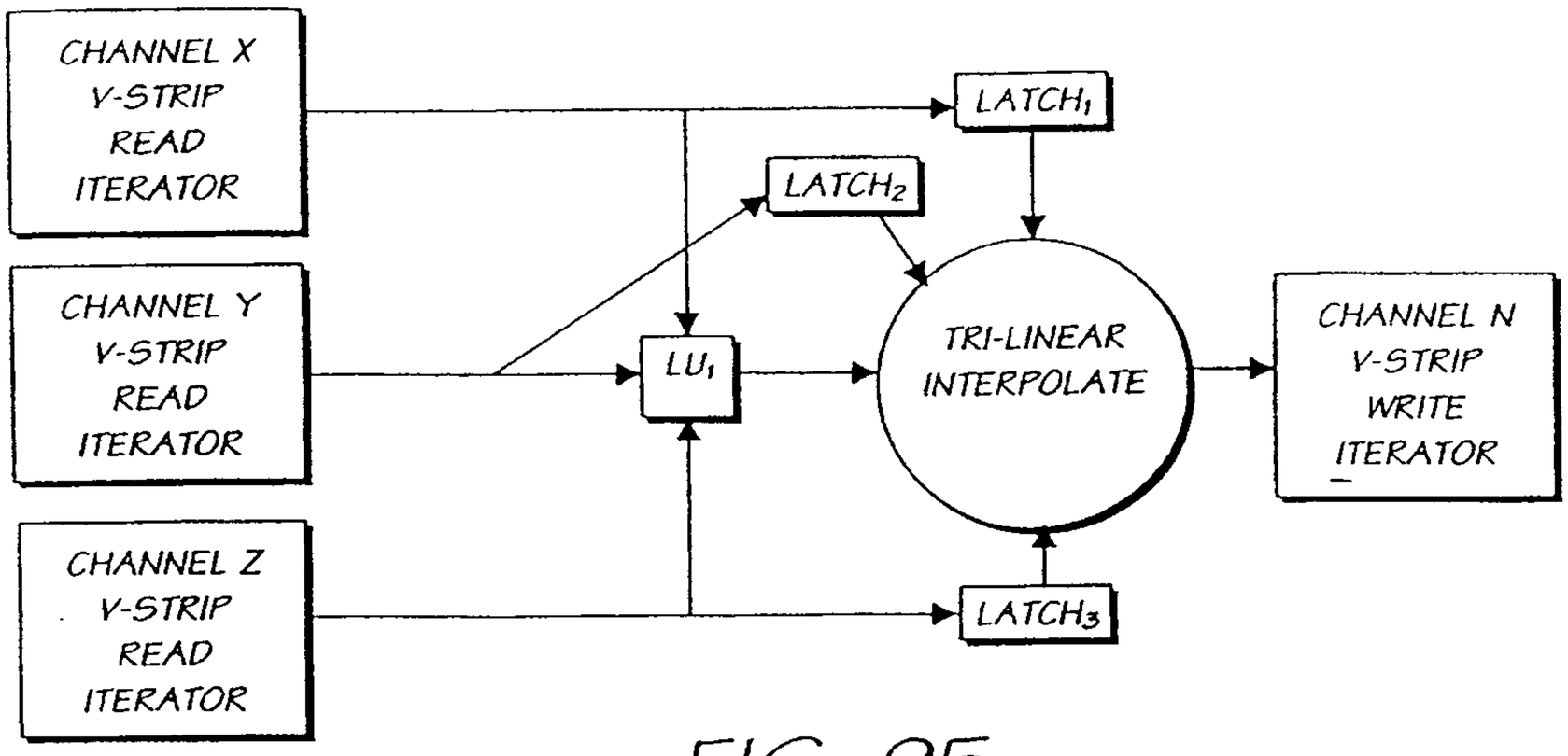
CHANNEL X V-STRIP READ ITERATOR
CHANNEL Y V-STRIP READ ITERATOR
CHANNEL Z V-STRIP READ ITERATOR
LU1
LATCH1
LATCH2
LATCH3
TRI-LINEAR INTERPOLATE
CHANNEL N V-STRIP WRITE ITERATOR

FIG. 95

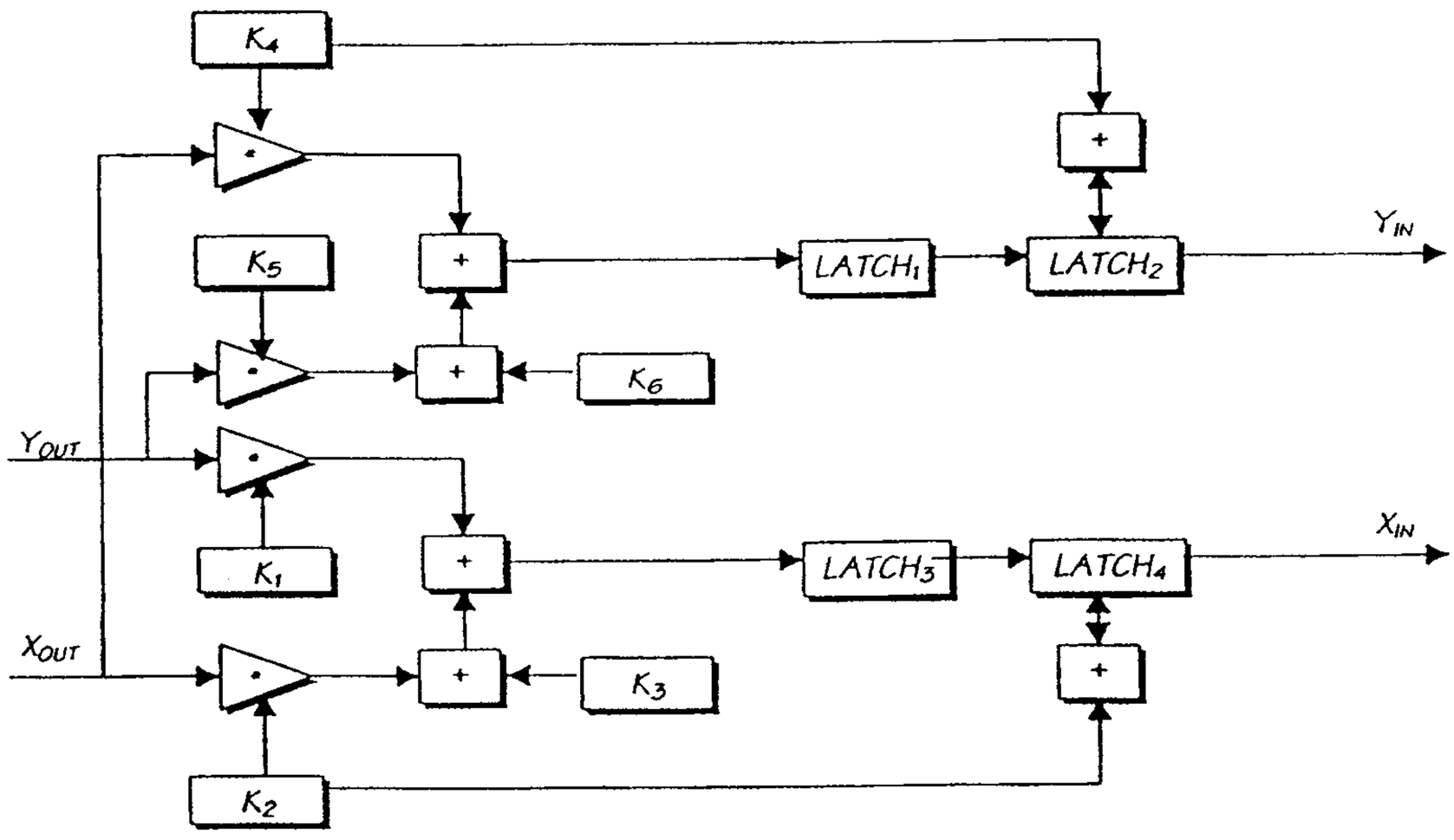
K4
K5
K6
K1
K3
K2
YOUT
XOUT
LATCH1
LATCH2
LATCH3
LATCH4
YIN
XIN

FIG. 96

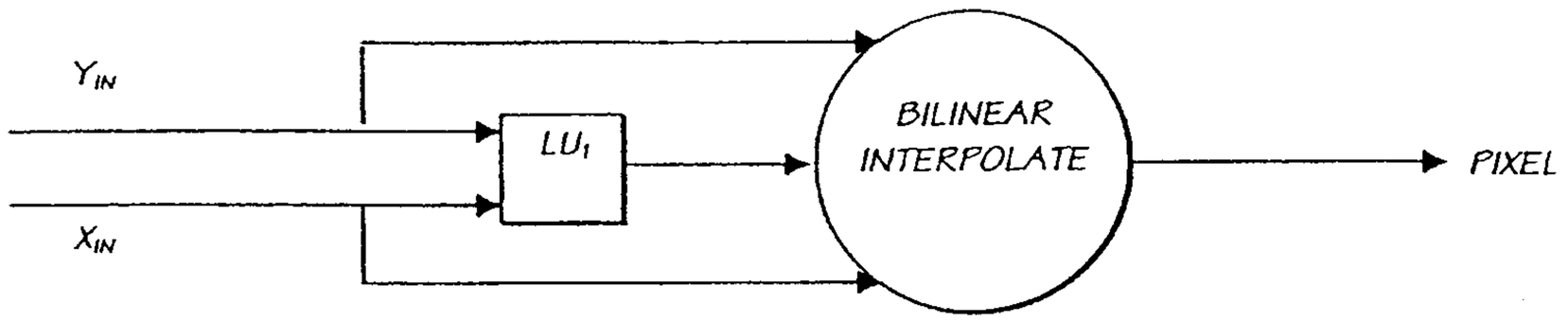
Y_{IN}
X_{IN}
LU_1
BILINEAR
INTERPOLATE
PIXEL

FIG. 97

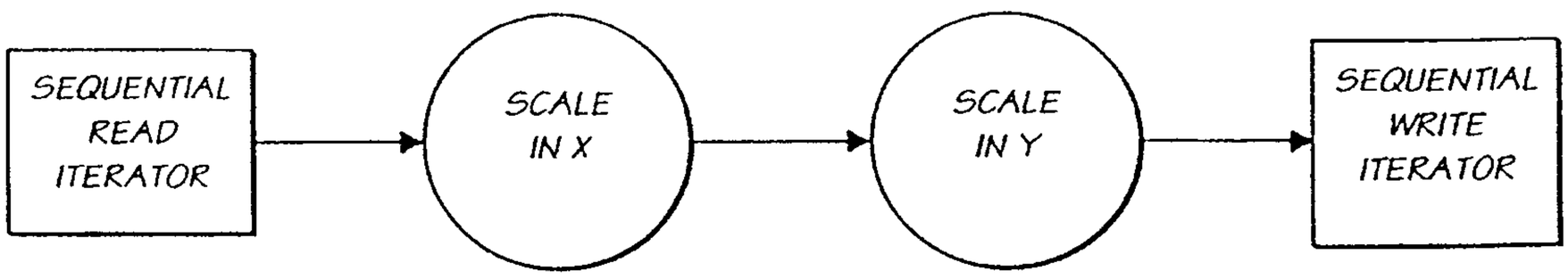
SEQUENTIAL
READ
ITERATOR
SCALE
IN X
SCALE
IN Y
SEQUENTIAL
WRITE
ITERATOR

FIG. 98

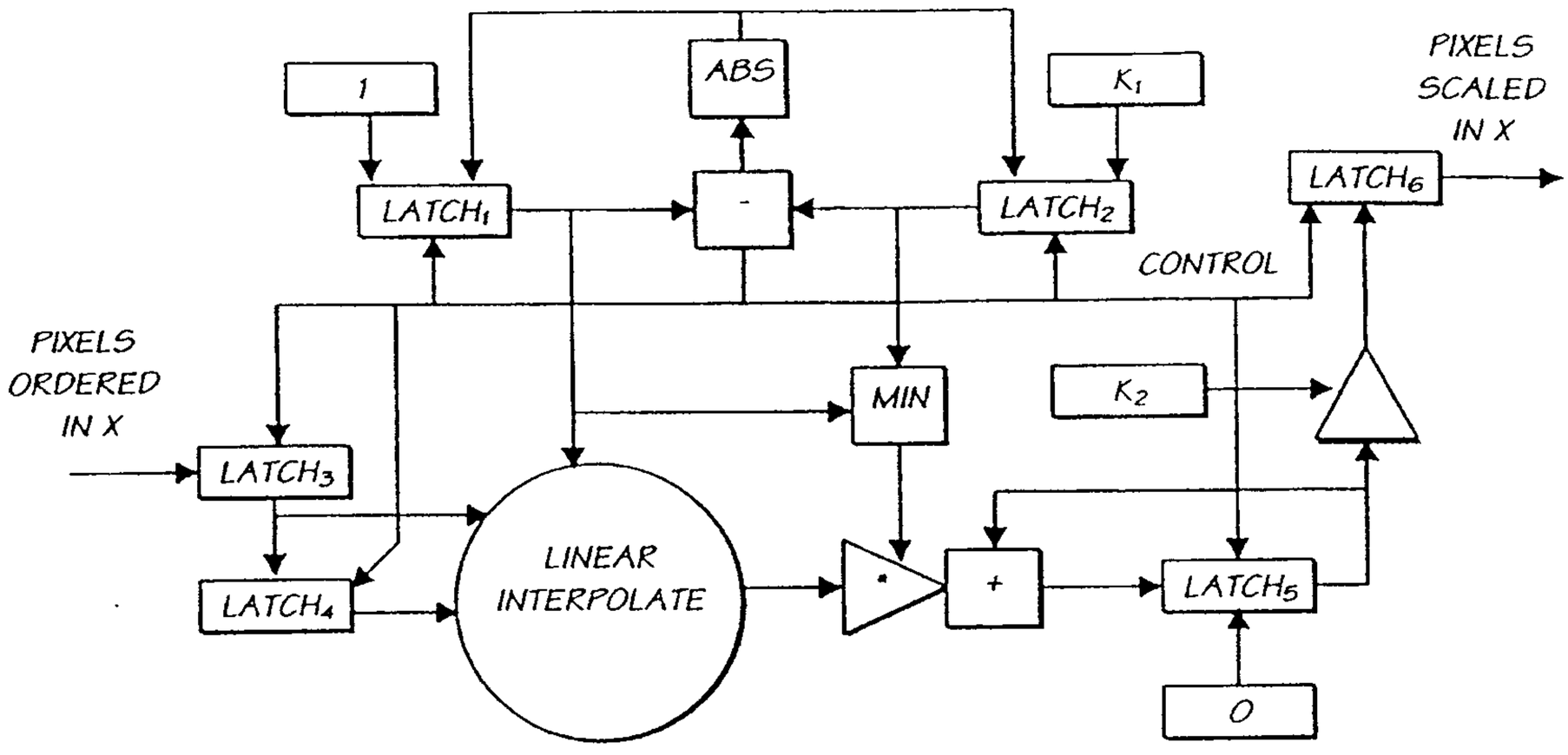

FIG. 99

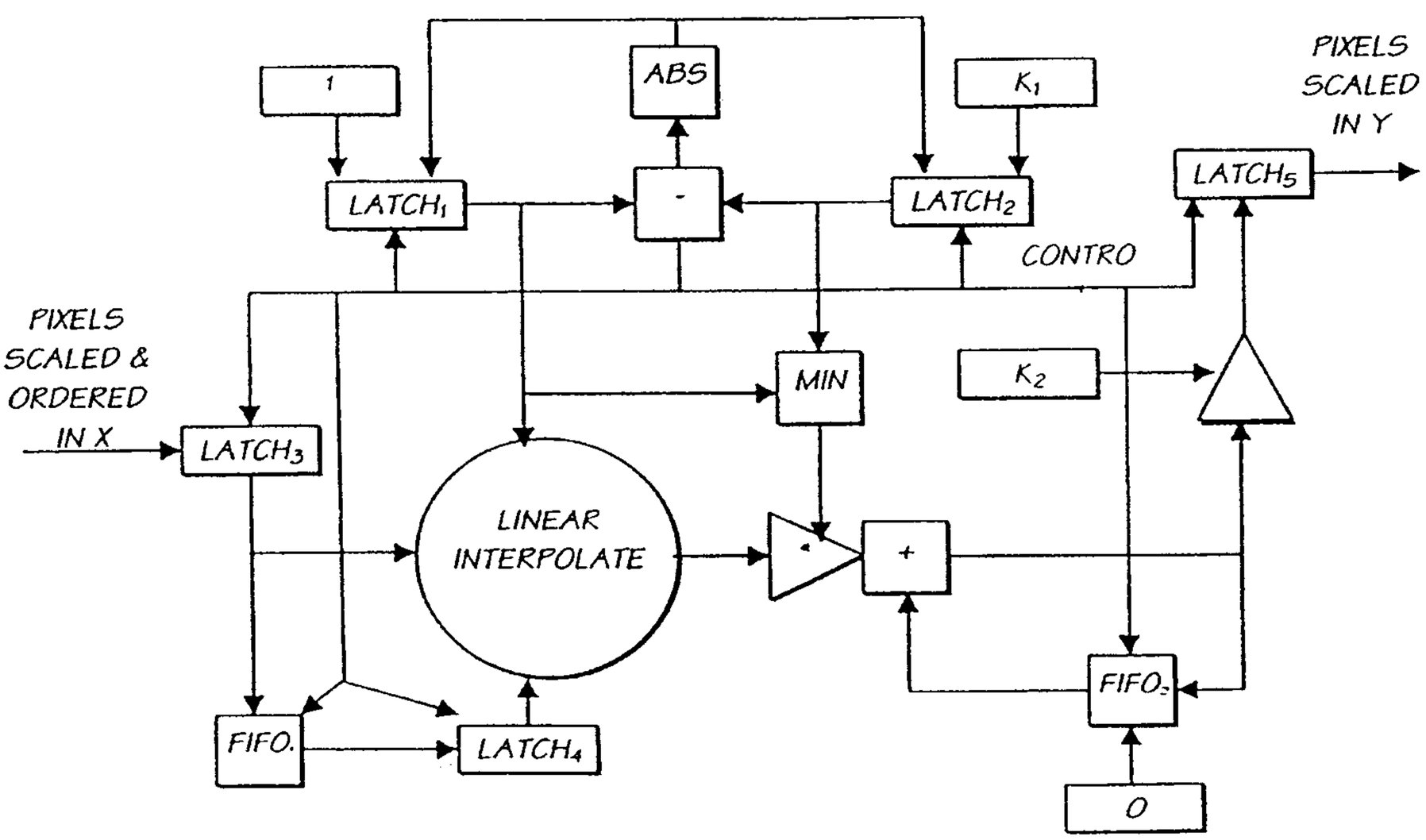

FIG. 100

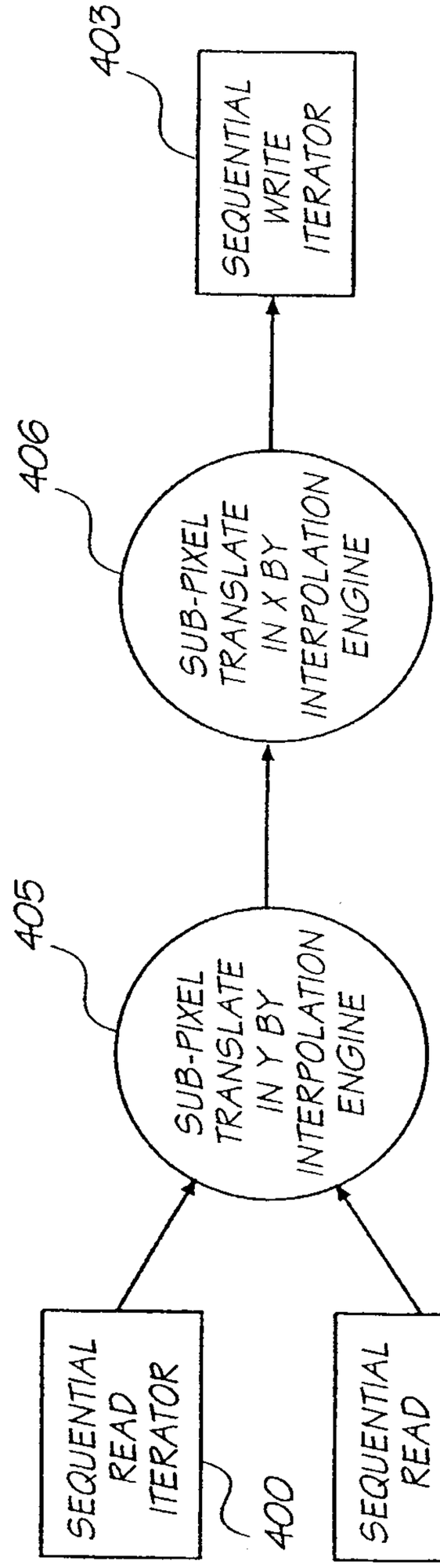

FIG. 102

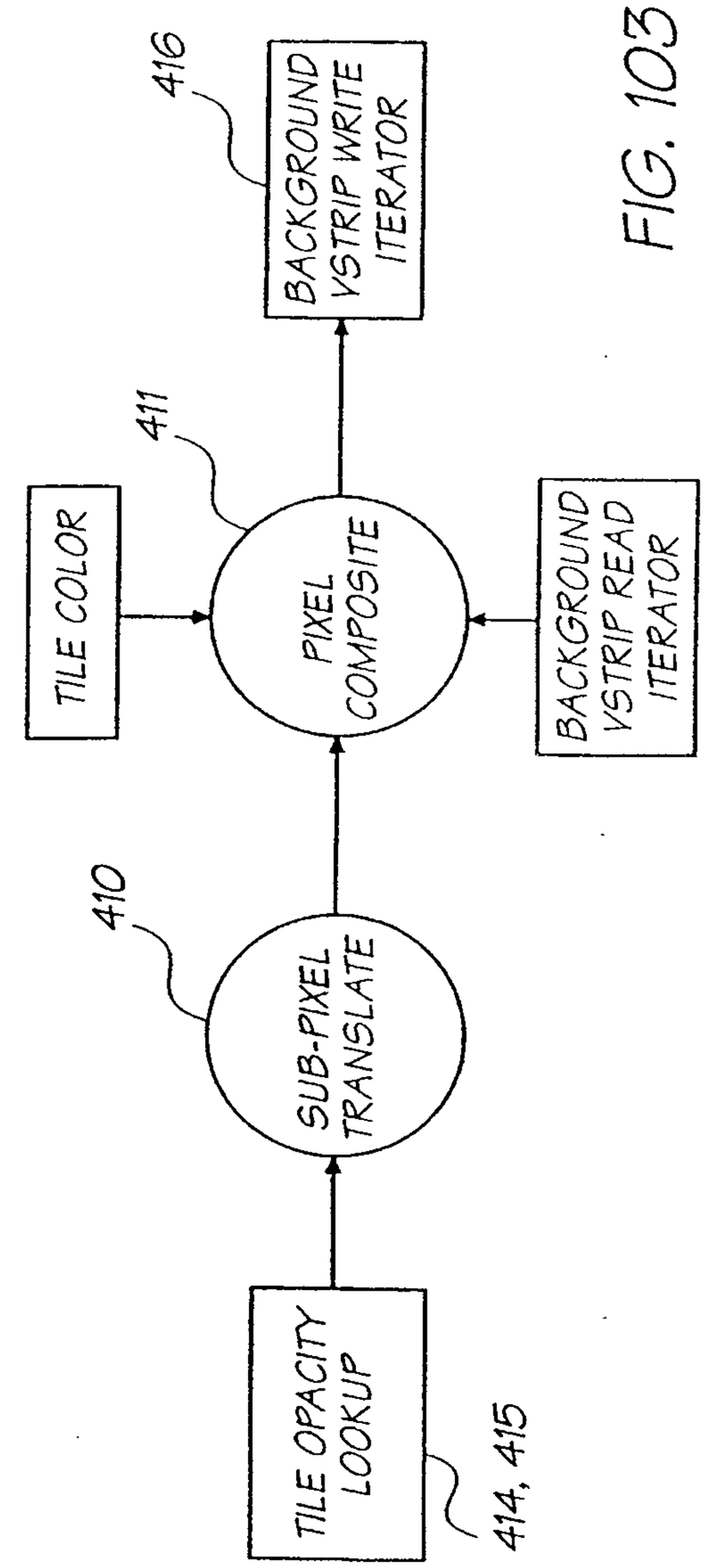

FIG. 103

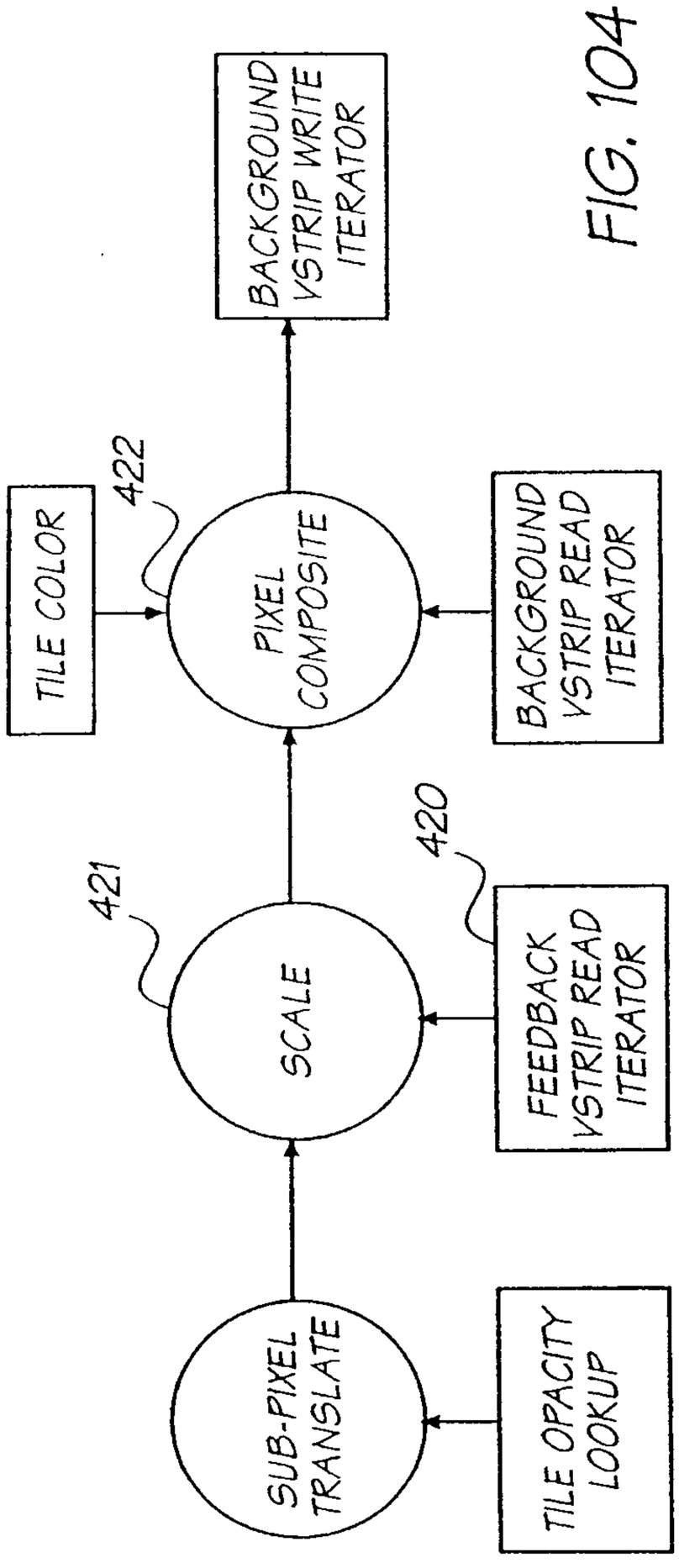

FIG. 104

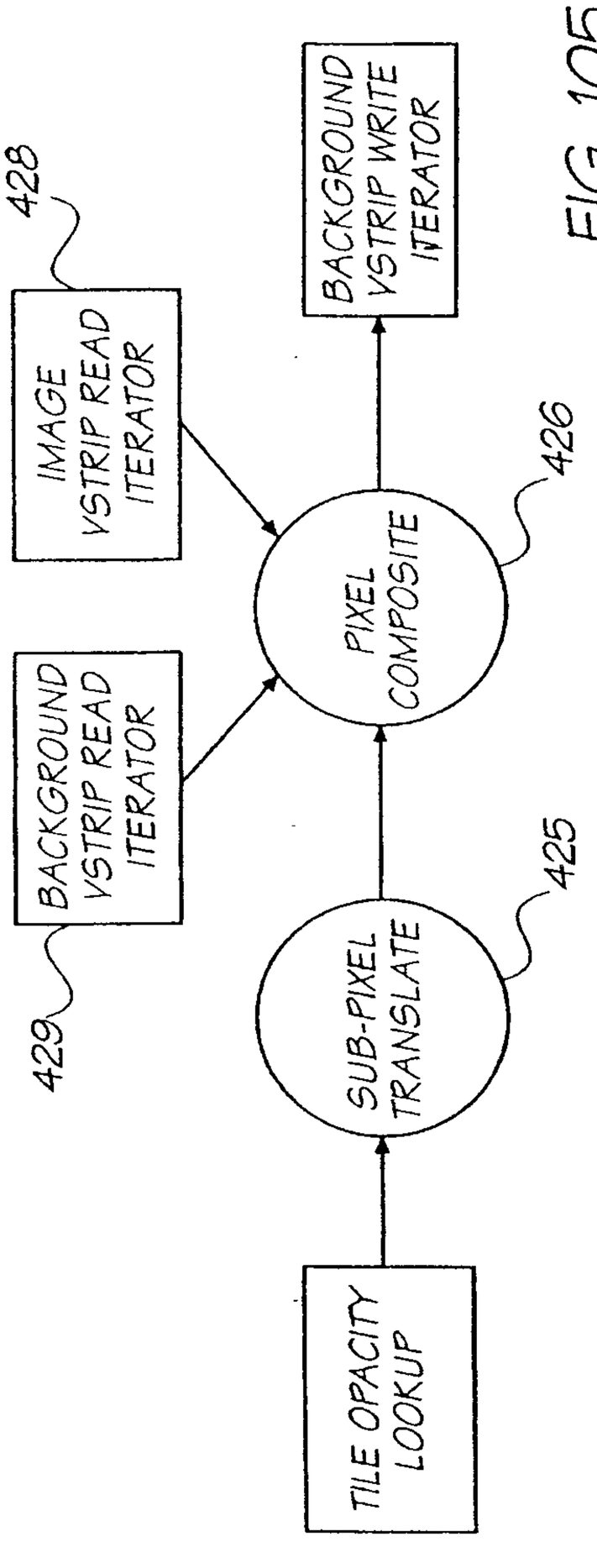

FIG. 105

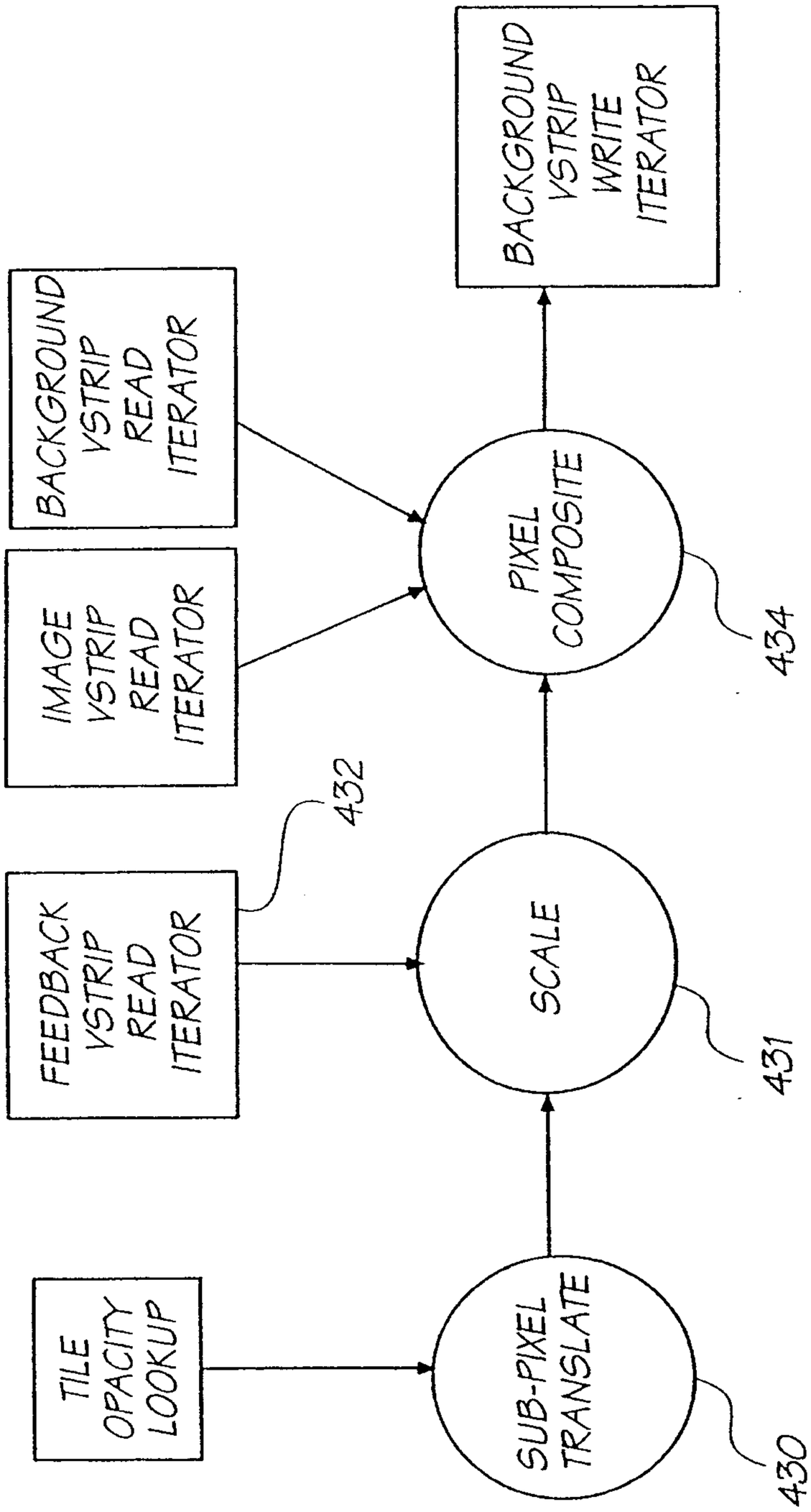
BACKGROUND VSTRIP WRITE ITERATOR
BACKGROUND VSTRIP READ ITERATOR
IMAGE VSTRIP READ ITERATOR
PIXEL COMPOSITE
434
FEEDBACK VSTRIP READ ITERATOR
432
SCALE
431
TILE OPACITY LOOKUP
SUB-PIXEL TRANSLATE
430

FIG. 106

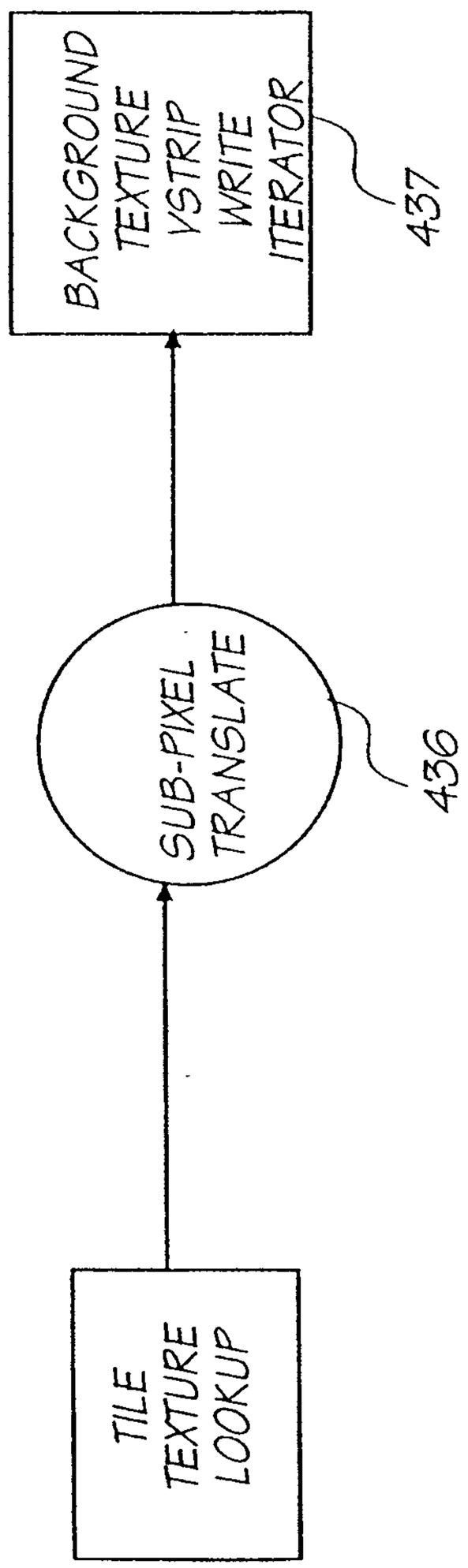
BACKGROUND TEXTURE YSTRIP WRITE ITERATOR
437
SUB-PIXEL TRANSLATE
436
TILE TEXTURE LOOKUP

FIG. 107

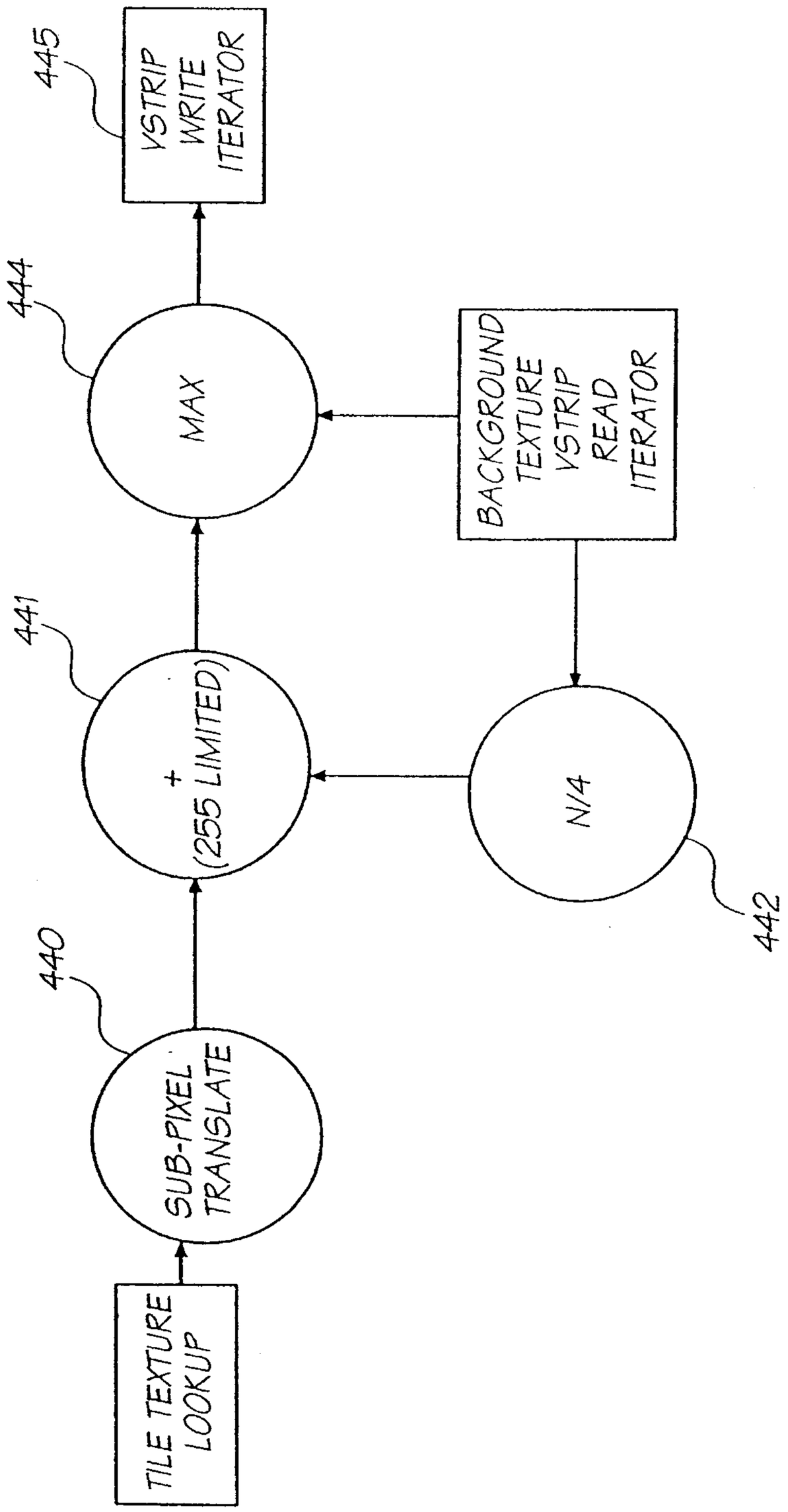
445
VSTRIP WRITE ITERATOR
444
MAX
BACKGROUND TEXTURE VSTRIP READ ITERATOR
441
+ (255 LIMITED)
N/4
442
440
SUB-PIXEL TRANSLATE
TILE TEXTURE LOOKUP

FIG. 108

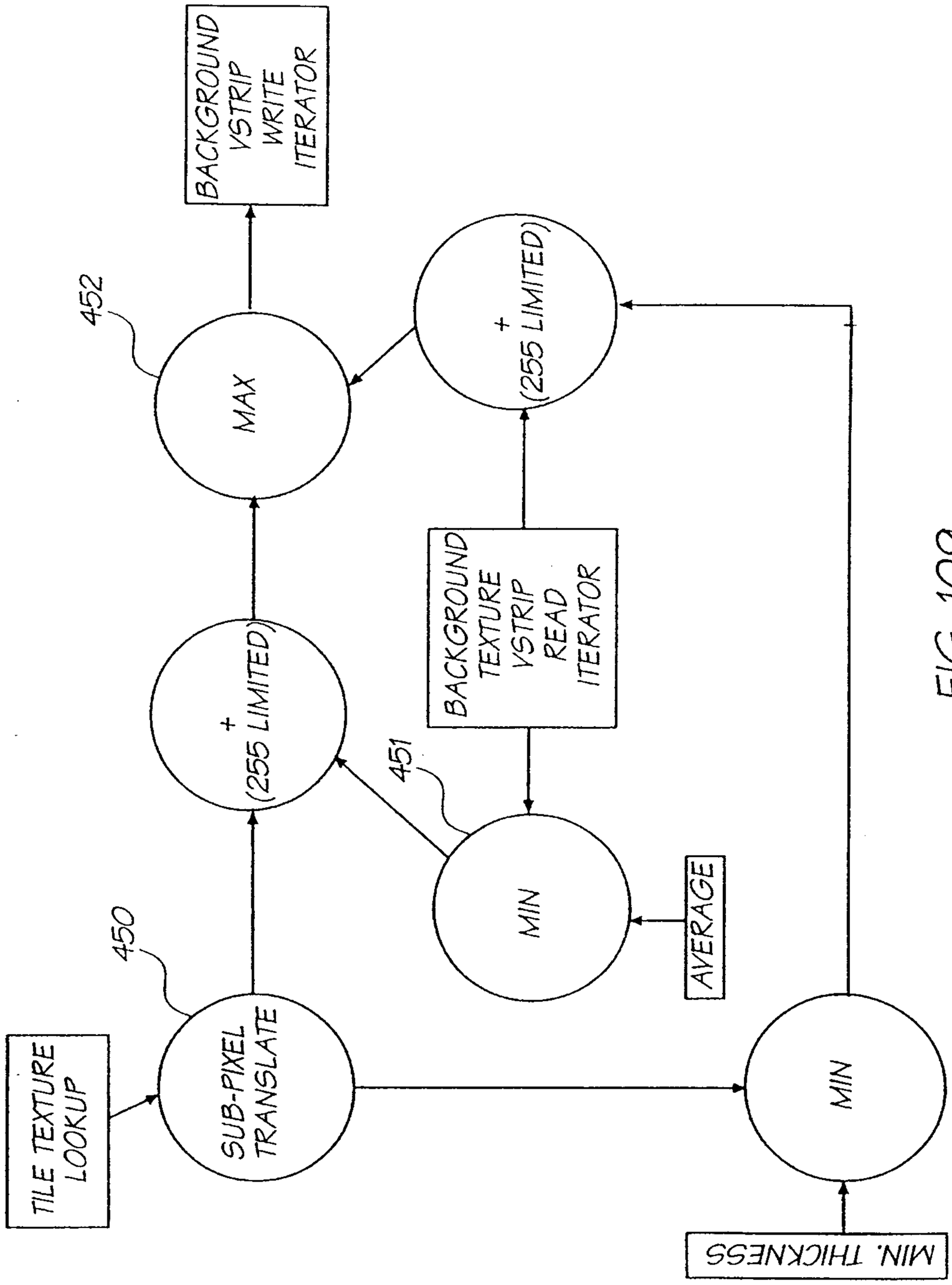
BACKGROUND VSTRIP WRITE ITERATOR
452
MAX
+ (255 LIMITED)
+ (255 LIMITED)
BACKGROUND TEXTURE VSTRIP READ ITERATOR
451
MIN
AVERAGE
450
SUB-PIXEL TRANSLATE
TILE TEXTURE LOOKUP
MIN
MIN. THICKNESS

FIG. 109

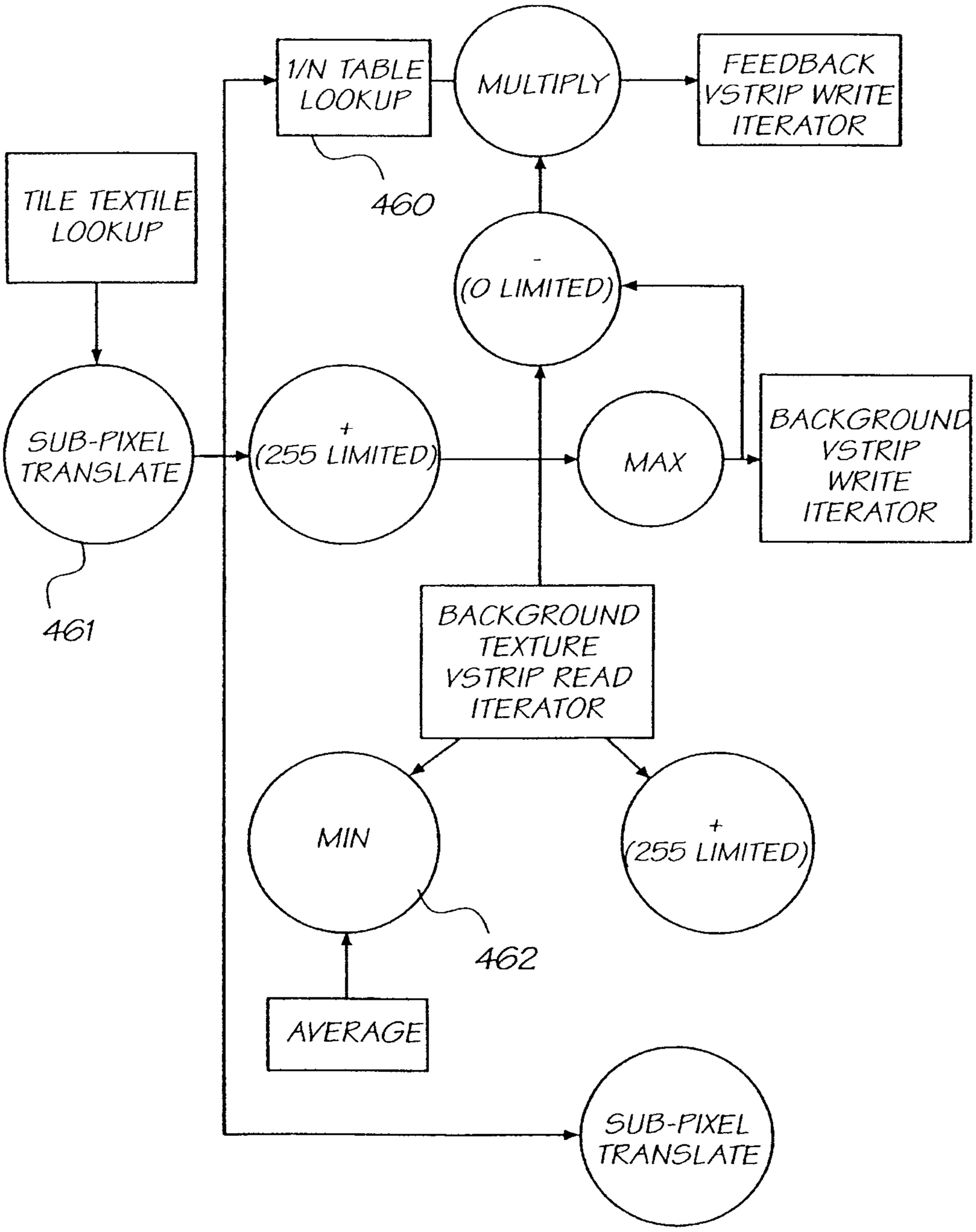
1/N TABLE LOOKUP
MULTIPLY
FEEDBACK VSTRIP WRITE ITERATOR
460
TILE TEXTILE LOOKUP
- (0 LIMITED)
SUB-PIXEL TRANSLATE
+ (255 LIMITED)
MAX
BACKGROUND VSTRIP WRITE ITERATOR
461
BACKGROUND TEXTURE VSTRIP READ ITERATOR
MIN
+ (255 LIMITED)
462
AVERAGE
SUB-PIXEL TRANSLATE

FIG. 110

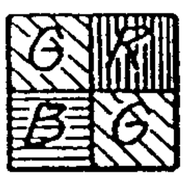

2×2 PIXEL BLOCK,
0 DEGREES

2×2 PIXEL BLOCK,
90 DEGREES

2×2 PIXEL BLOCK,
180 DEGREES

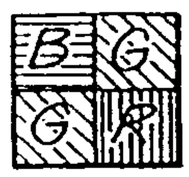

2×2 PIXEL BLOCK,
270 DEGREES

FIG. 111

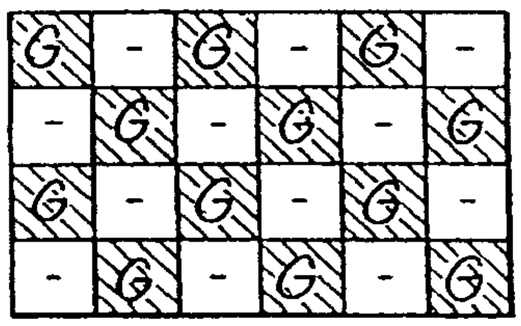

LINEAR INTERPOLATED PIXELS

ACTUAL PIXELS (NOT INTERPOLATED)

FIG. 112

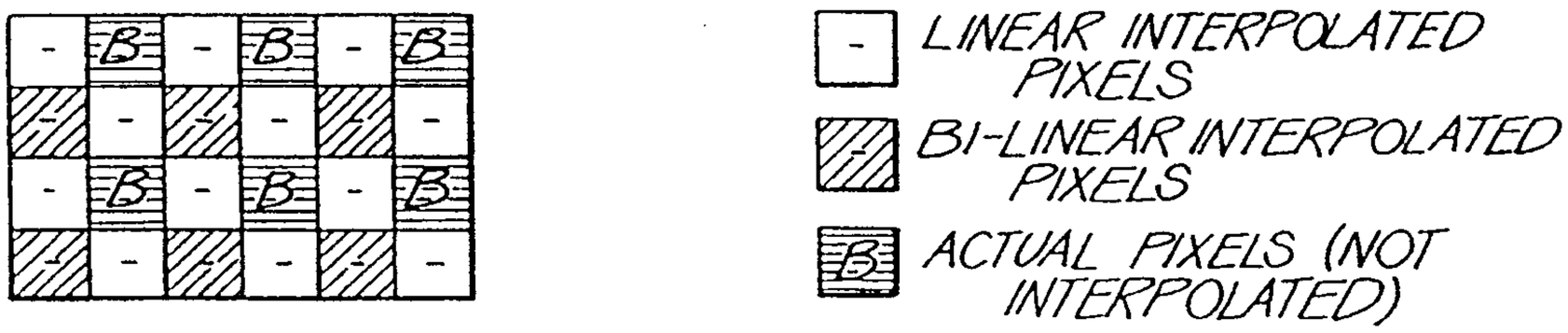

FIG. 113

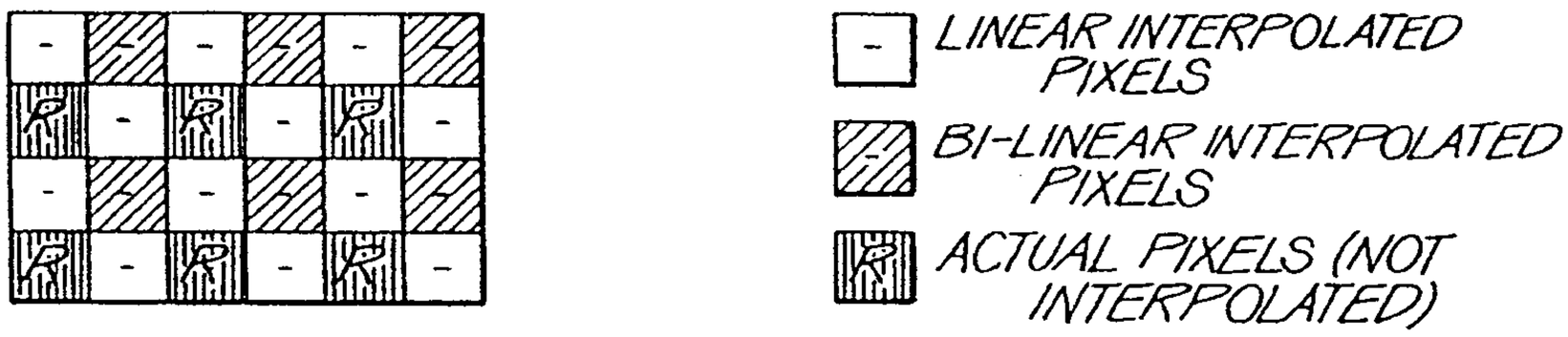

FIG. 114

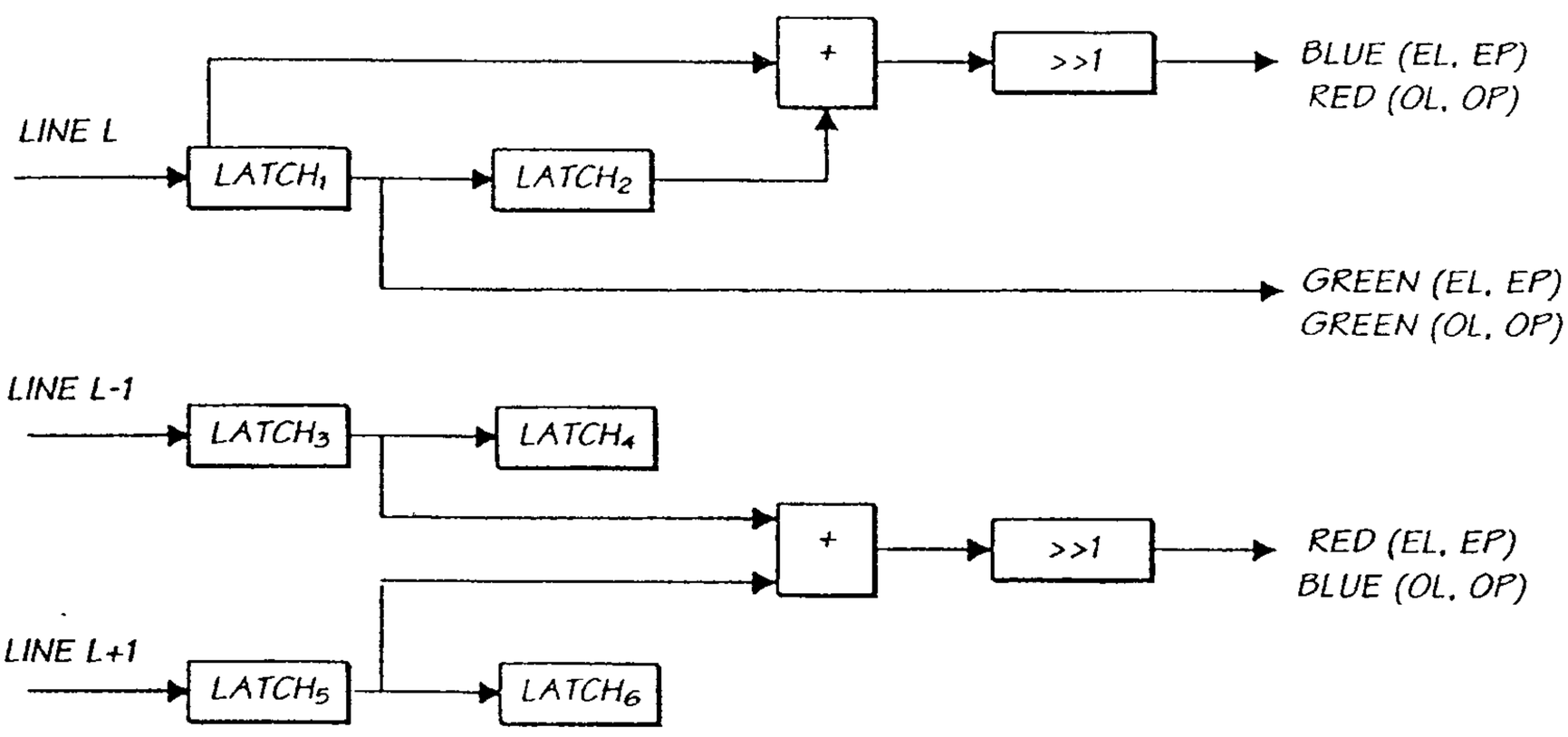

FIG. 115

FIG. 116

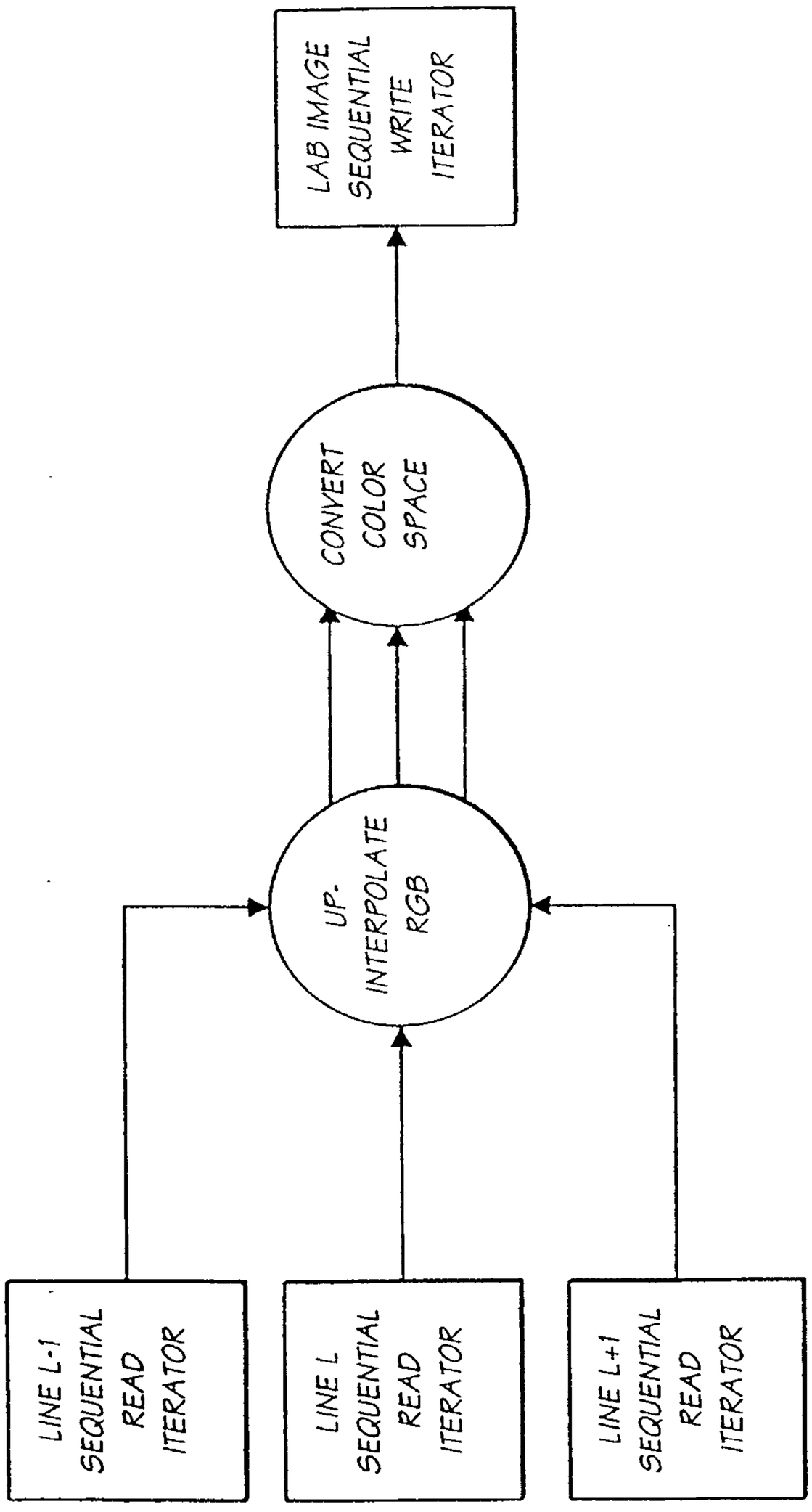
LAB IMAGE SEQUENTIAL WRITE ITERATOR
CONVERT COLOR SPACE
UP-INTERPOLATE RGB
LINE L-1 SEQUENTIAL READ ITERATOR
LINE L SEQUENTIAL READ ITERATOR
LINE L+1 SEQUENTIAL READ ITERATOR

FIG. 117

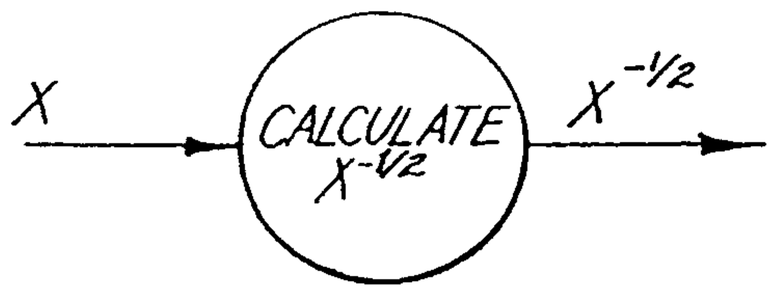

FIG. 118

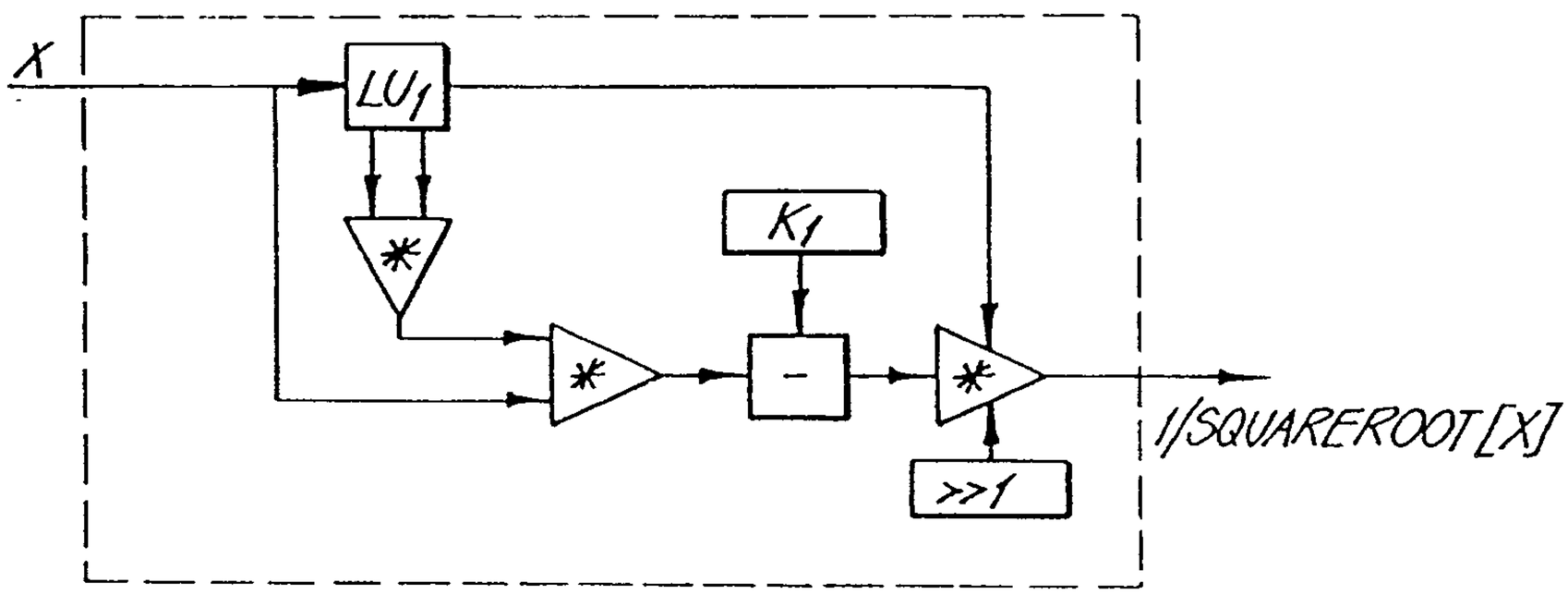

FIG. 119

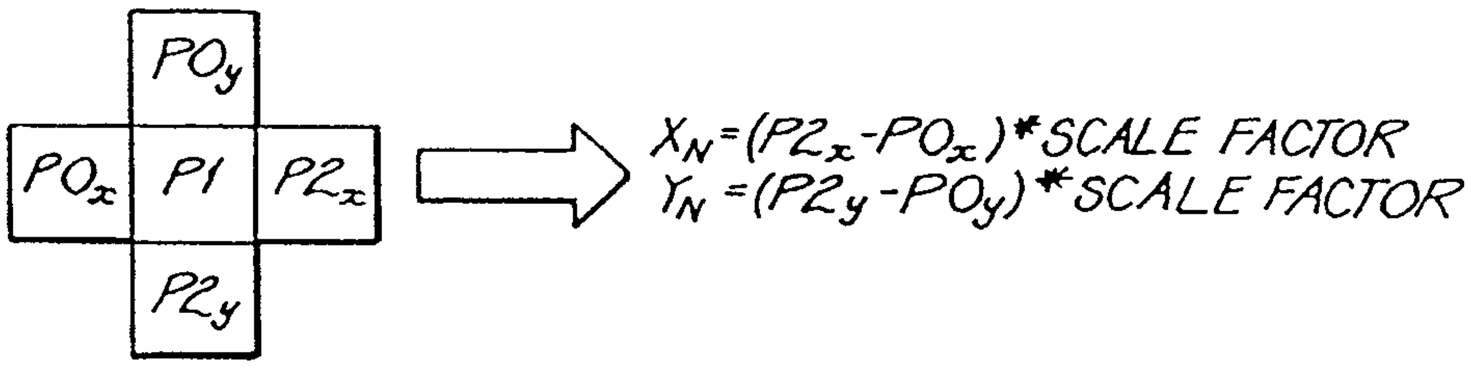

FIG. 120

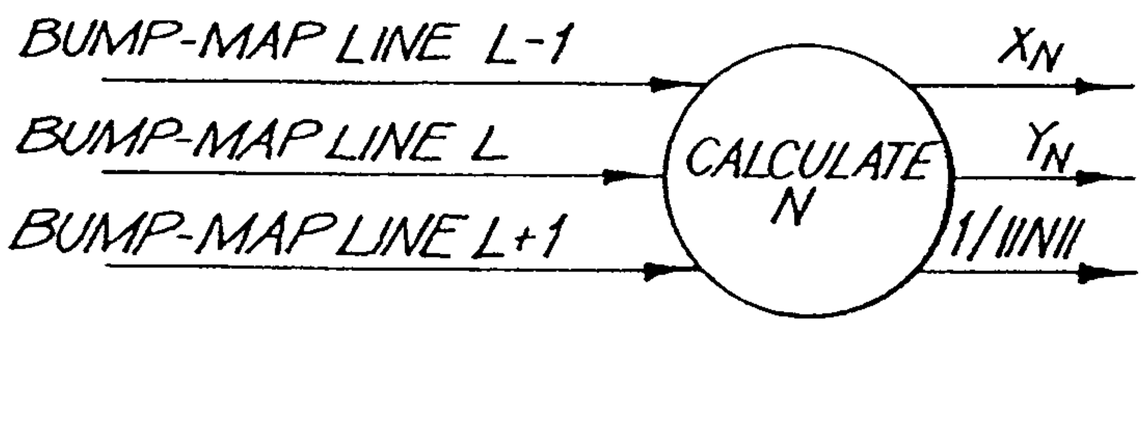

FIG. 121

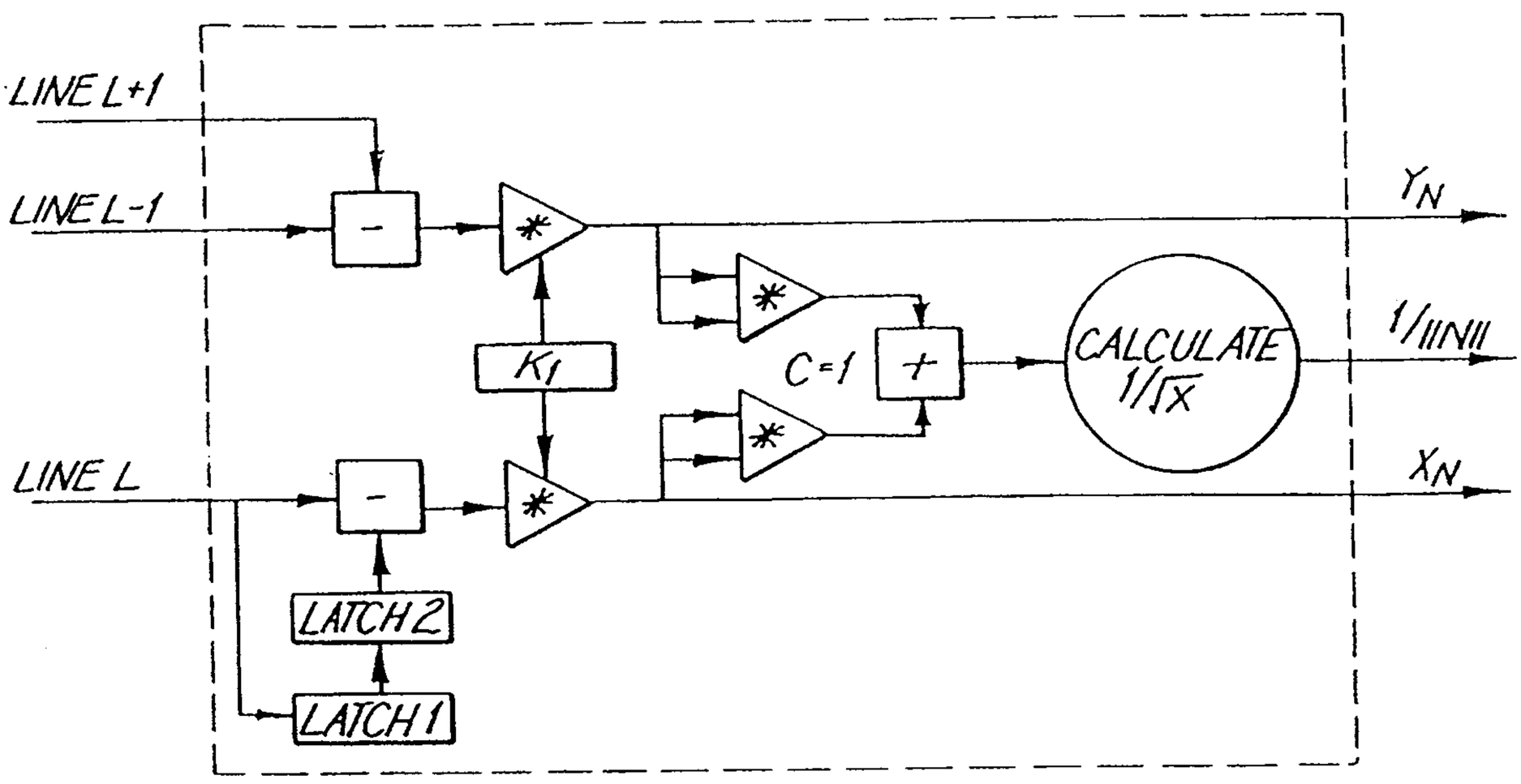
LINE L+1
LINE L-1
LINE L
K1
C=1
LATCH 2
LATCH 1
CALCULATE
1/√X
YN
1/IINII
XN

FIG. 122

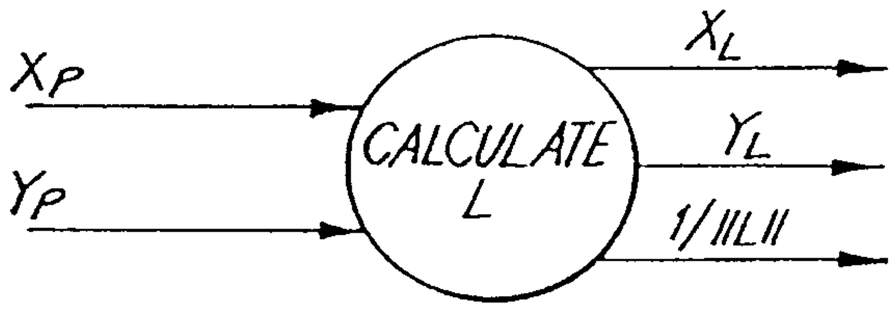

FIG. 123

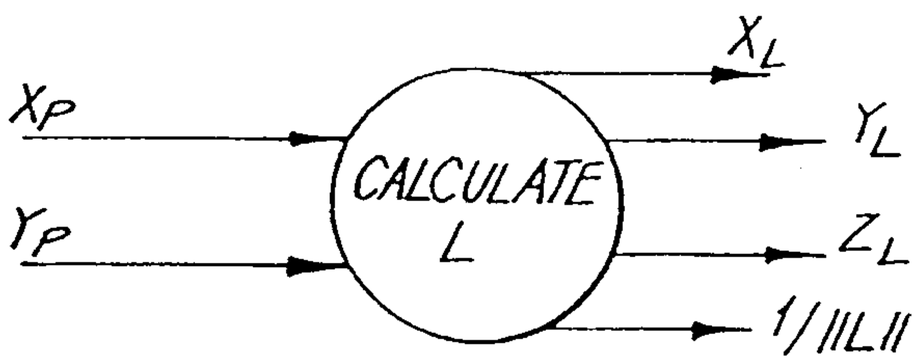

FIG. 124

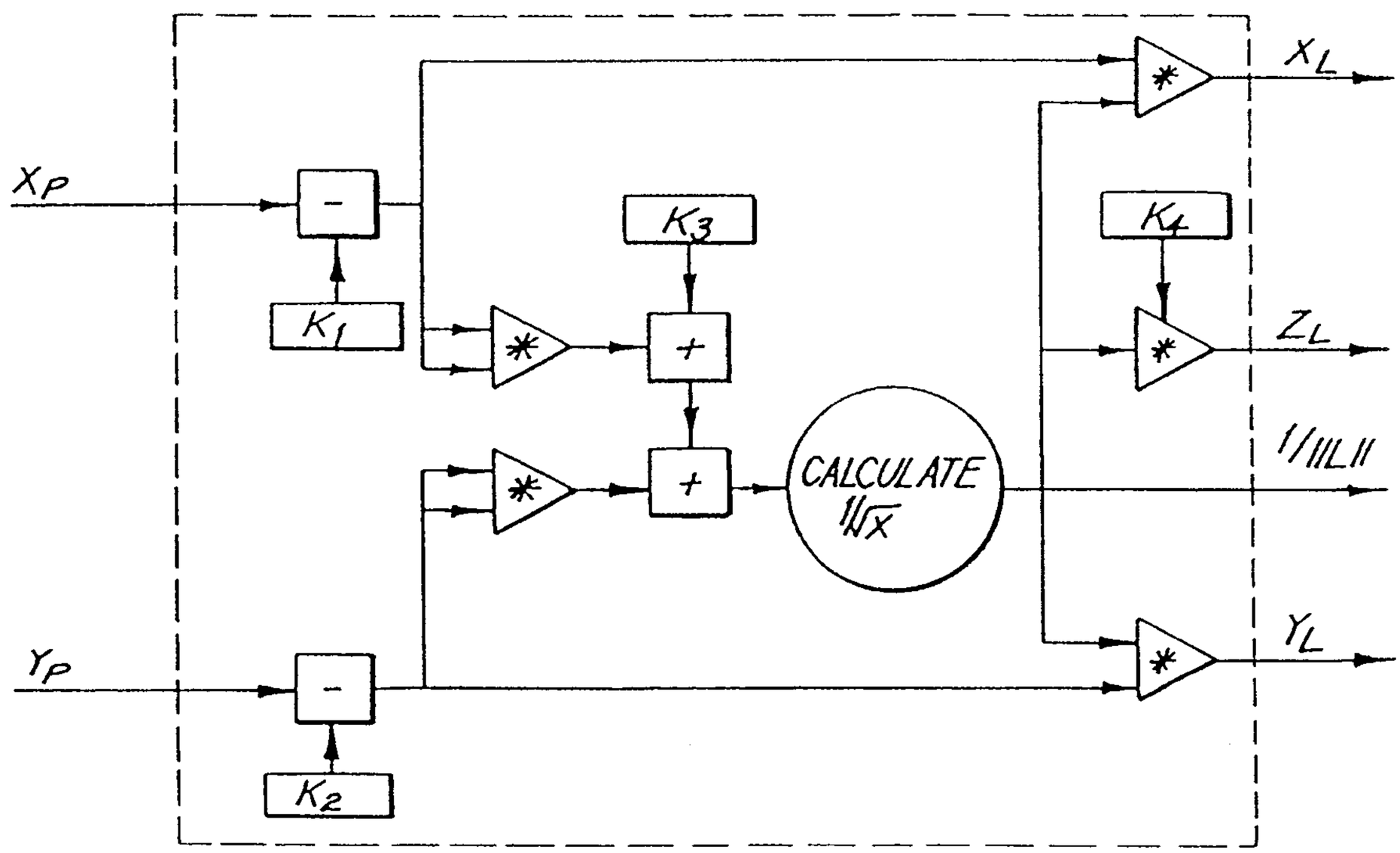

FIG. 125

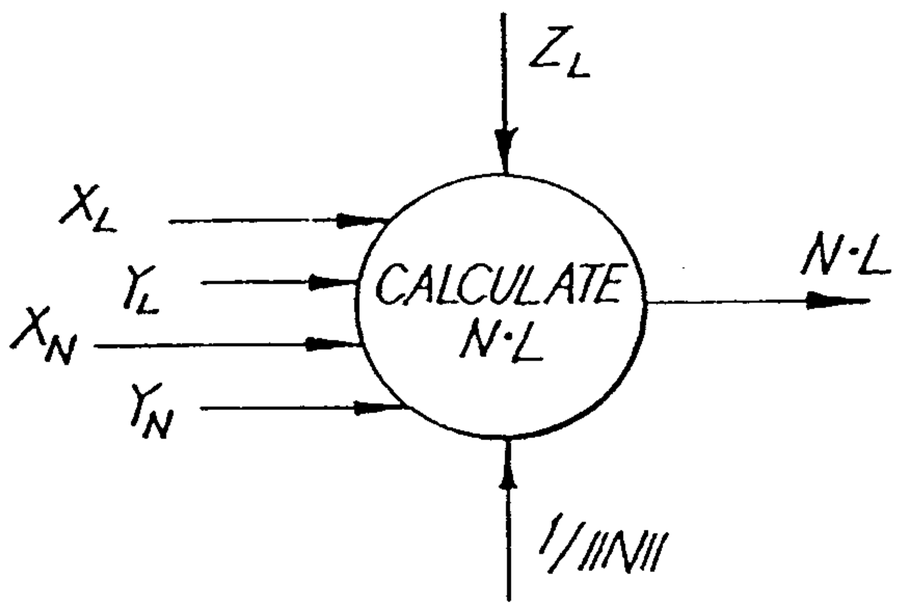

FIG. 126

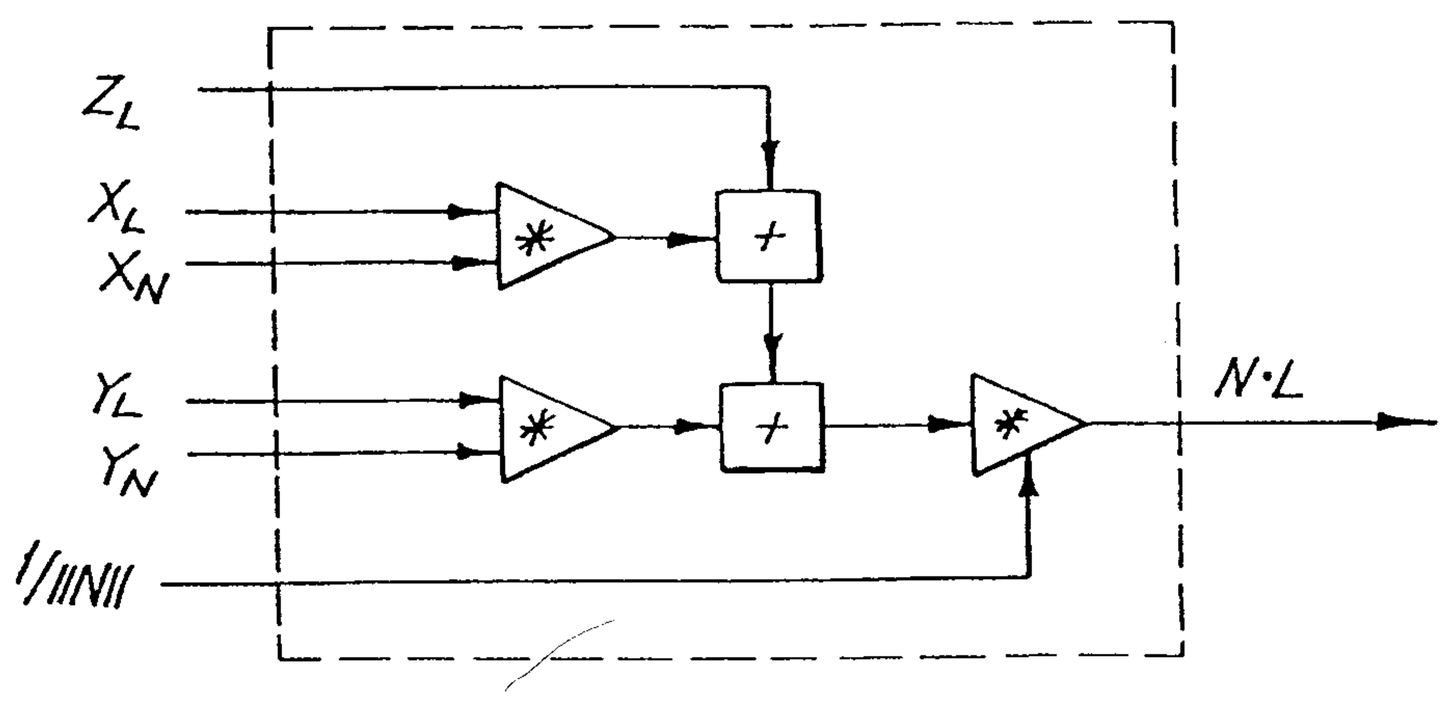

FIG. 127

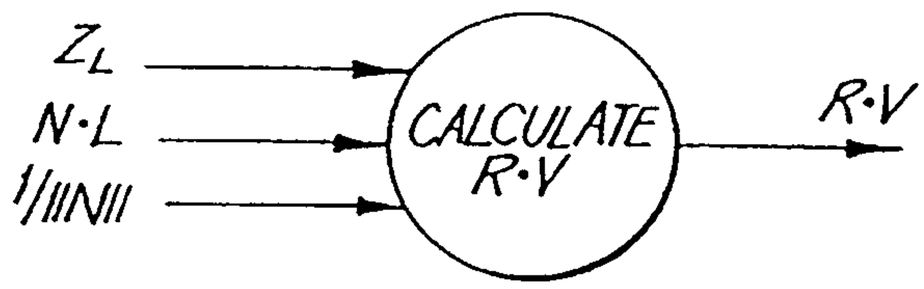

FIG. 128

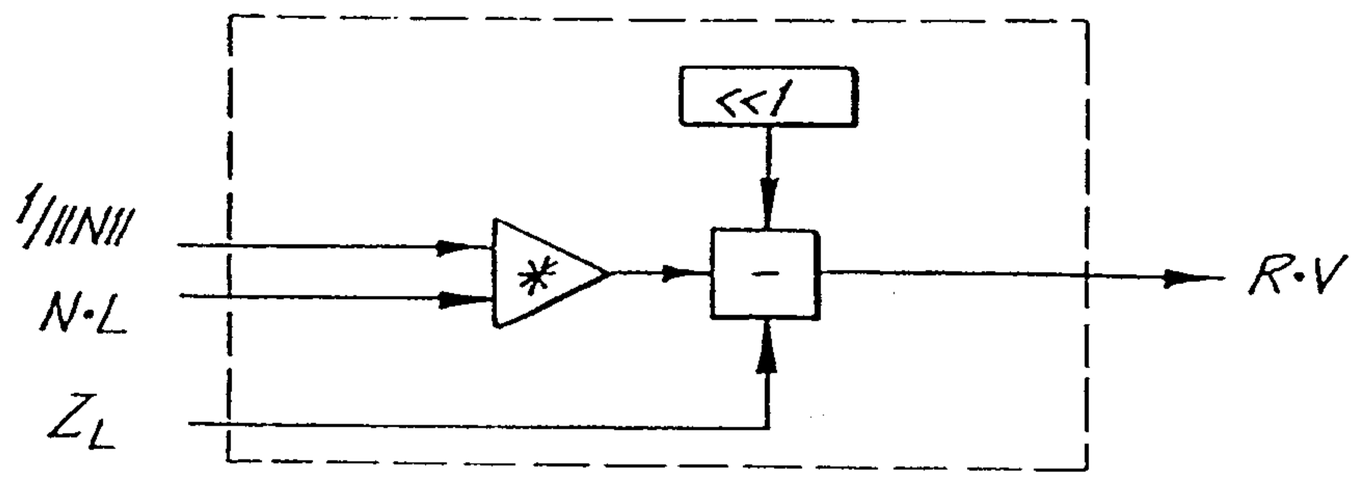

FIG. 129

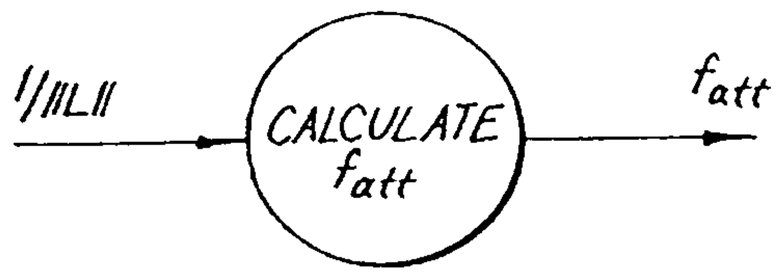

FIG. 130

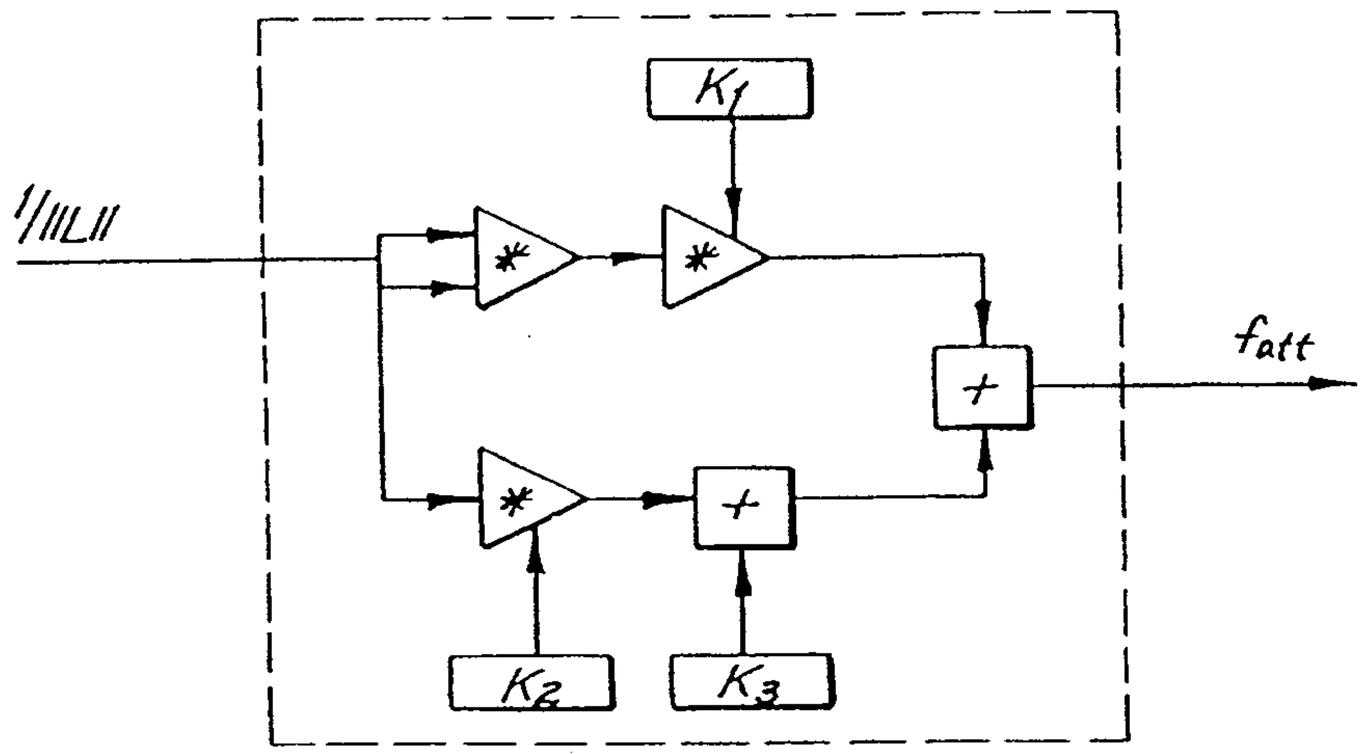

FIG. 131

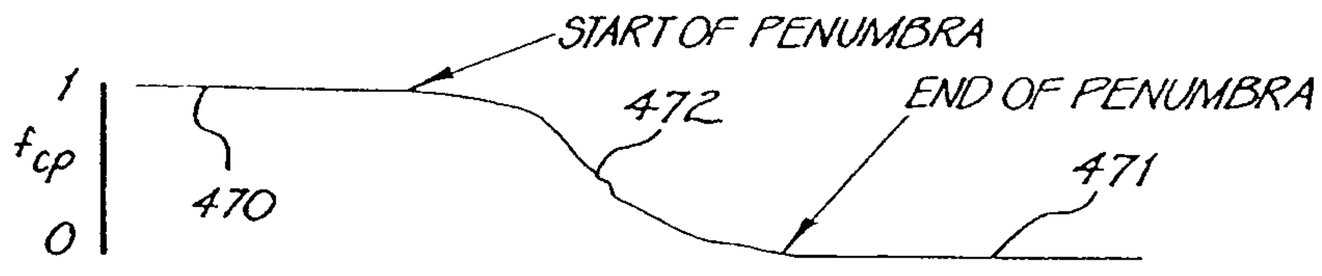

FIG. 132

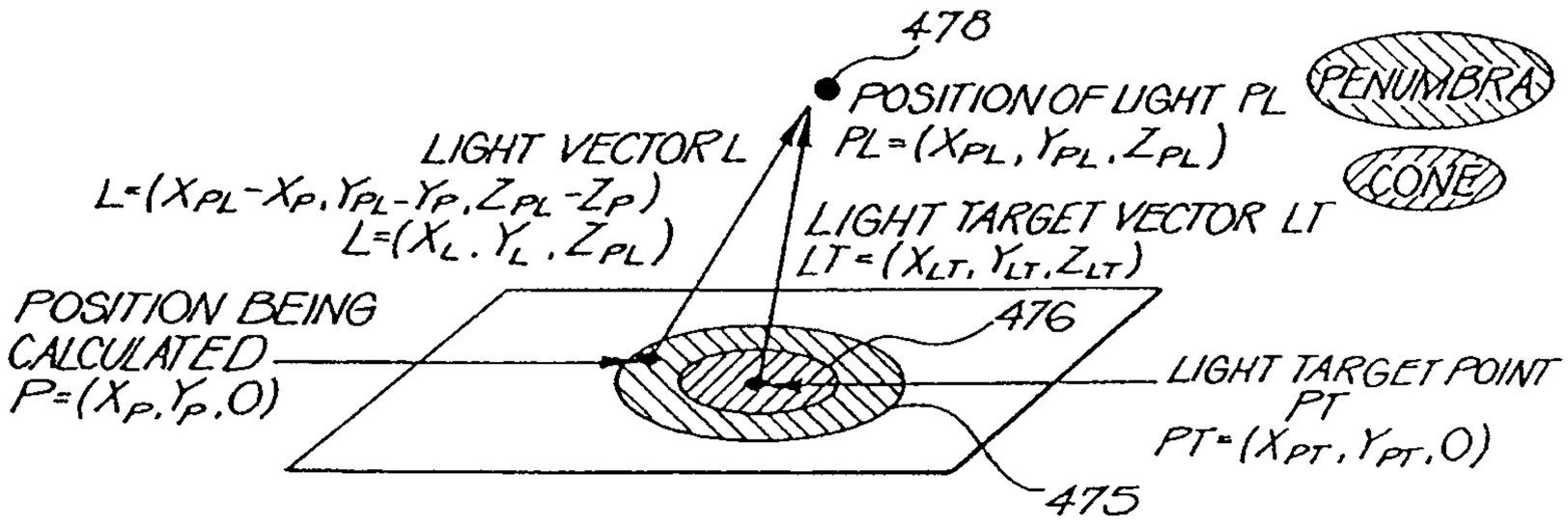

FIG. 133

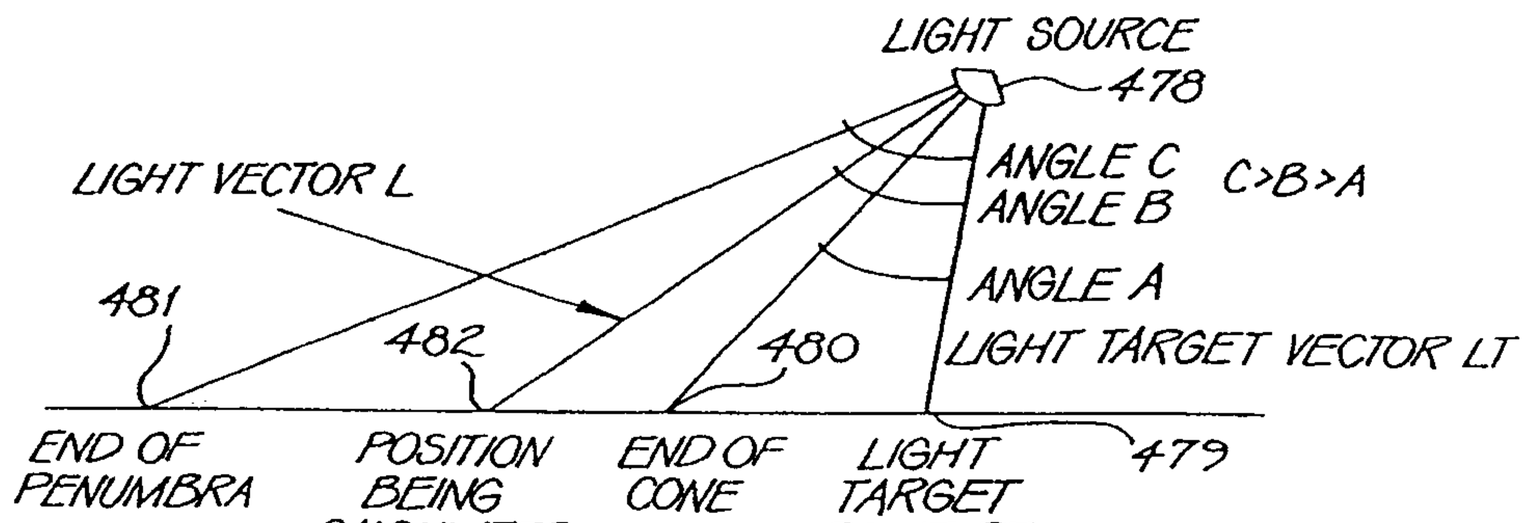

FIG. 134

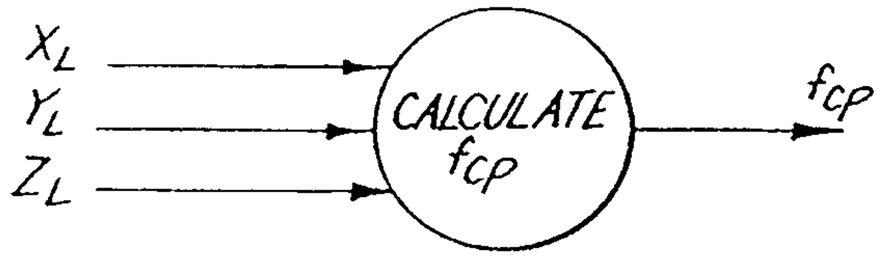

FIG. 135

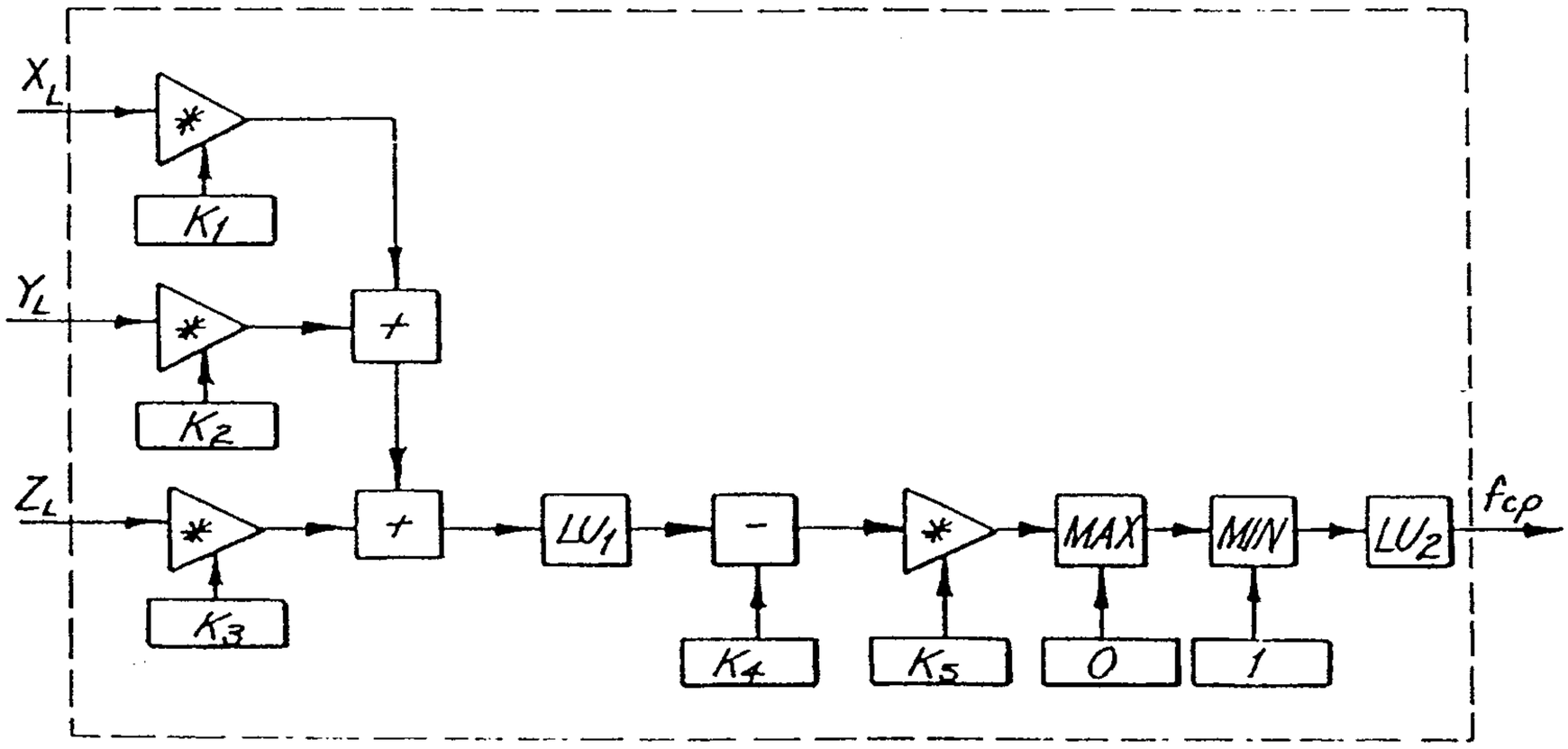

FIG. 136

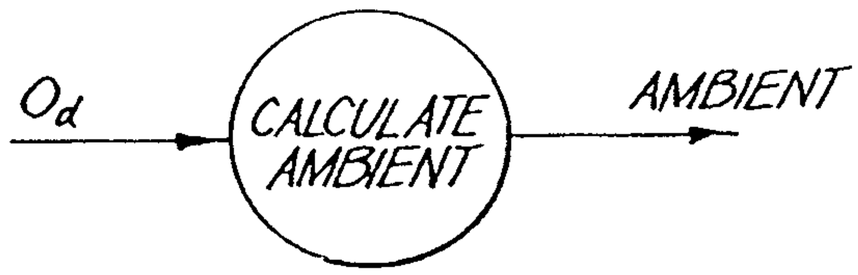

FIG. 137

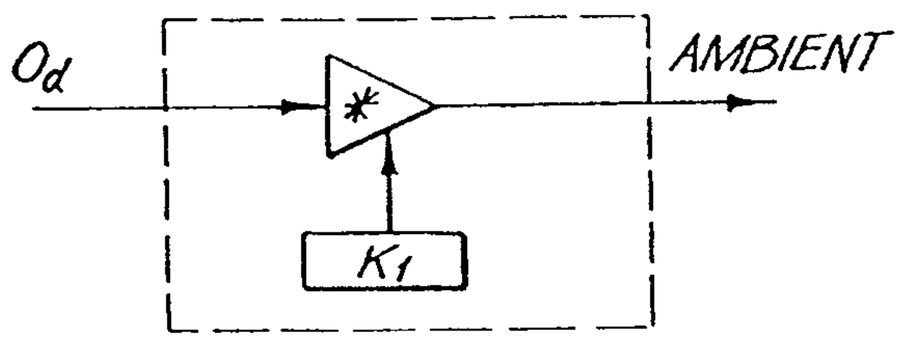

FIG. 138

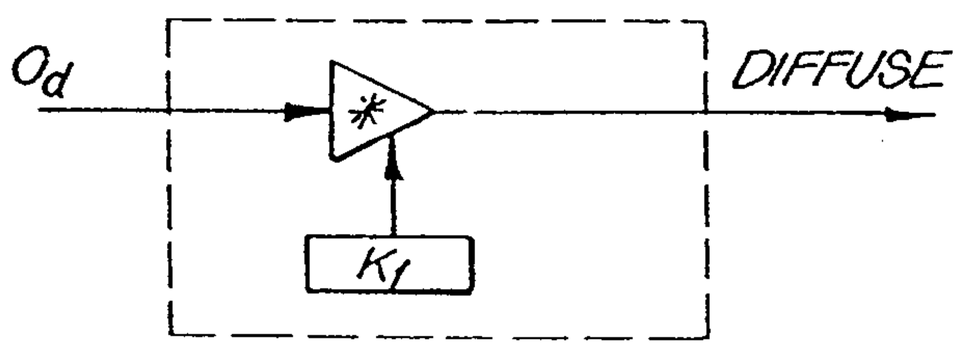

FIG. 139

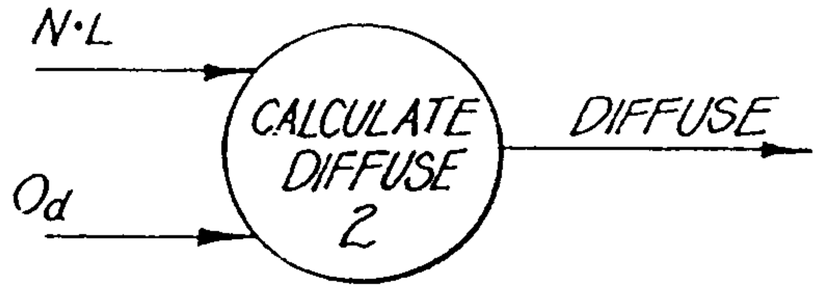

FIG. 140

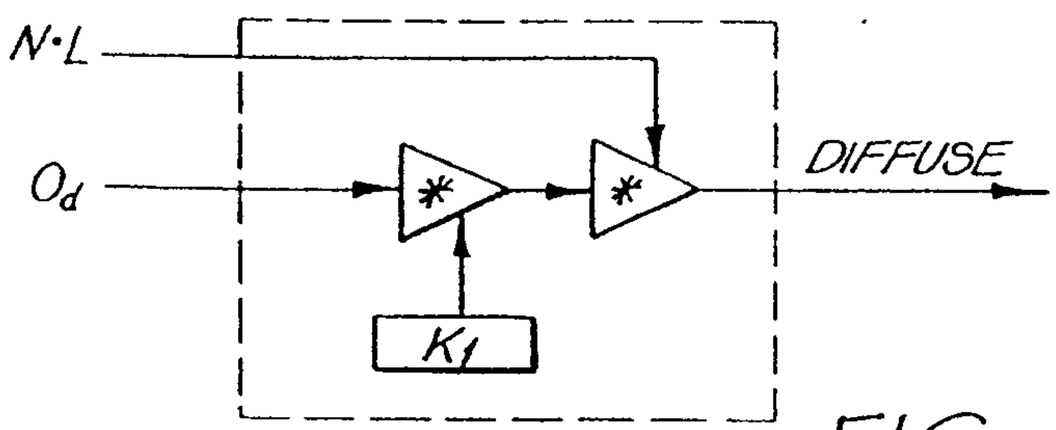

FIG. 141

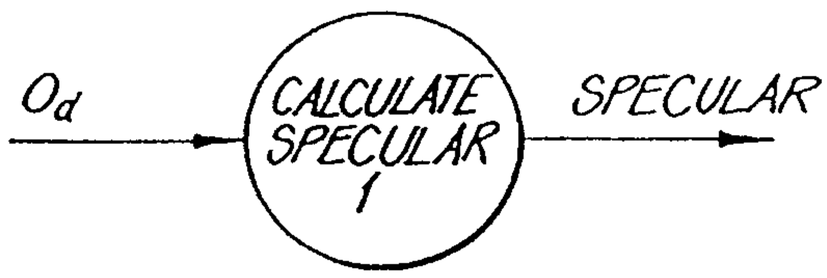

FIG. 142

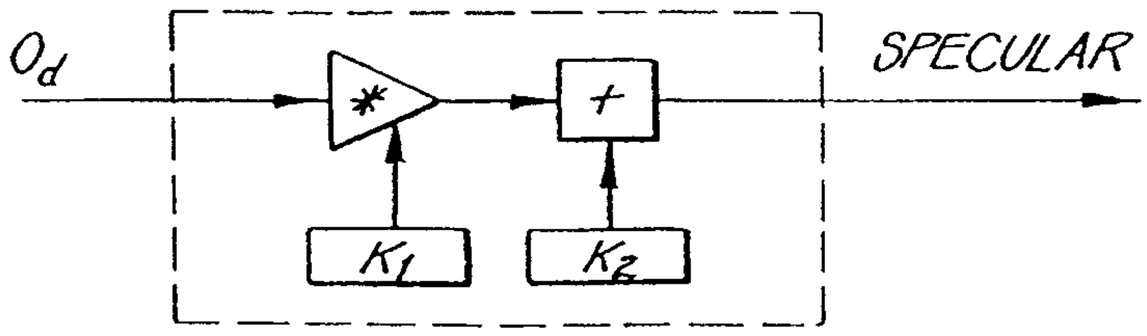

FIG 14.3

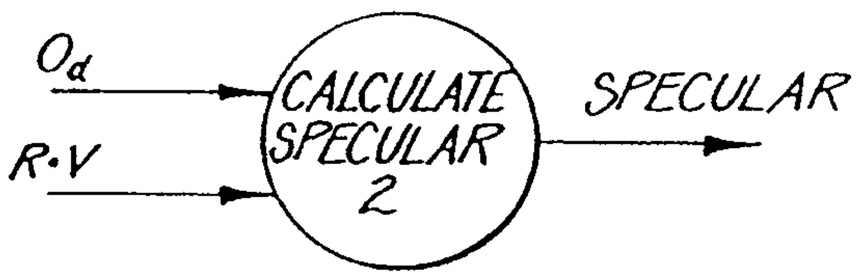

FIG. 144

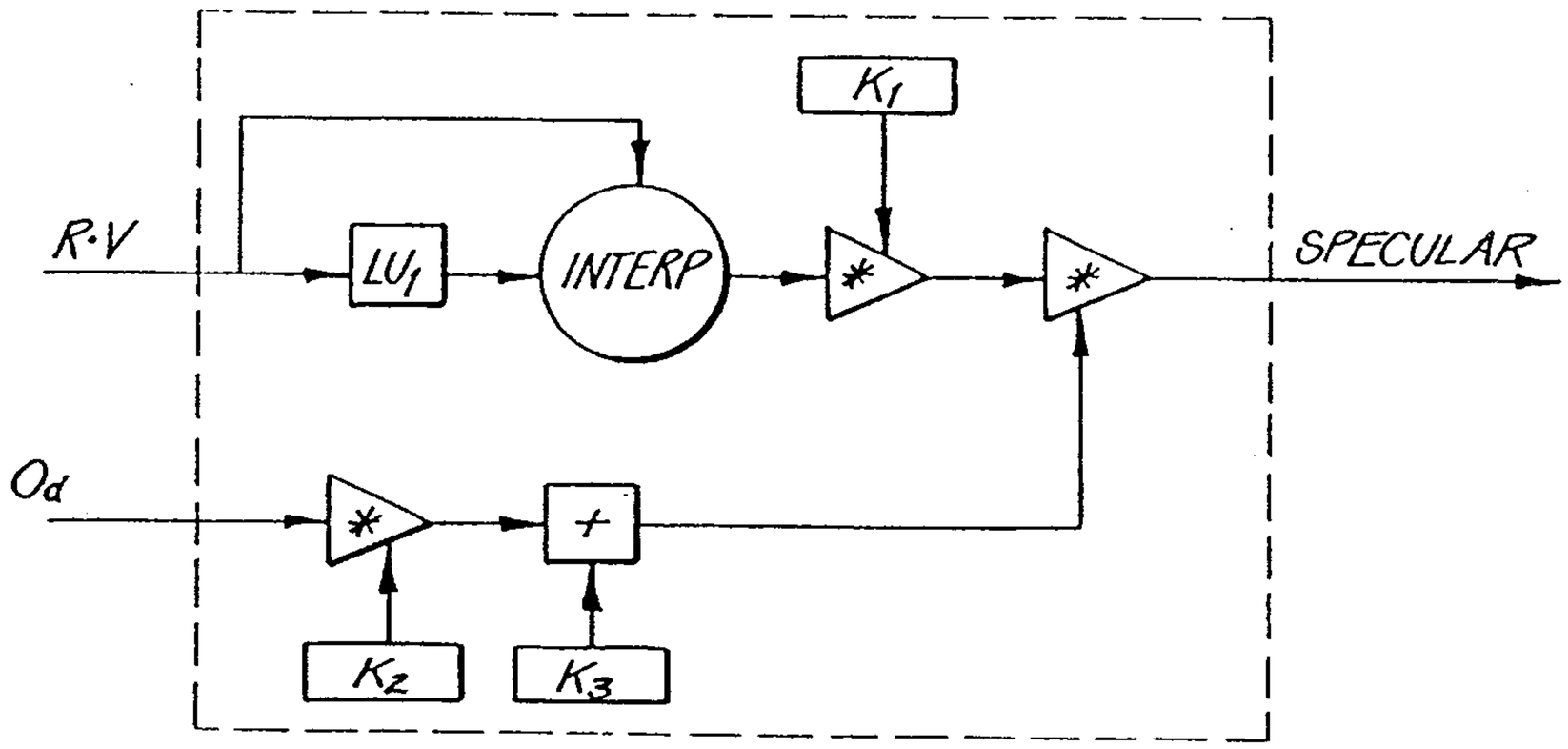

FIG. 145

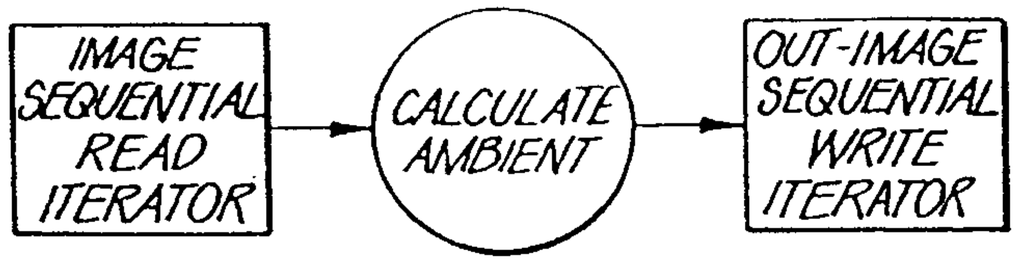

FIG. 146

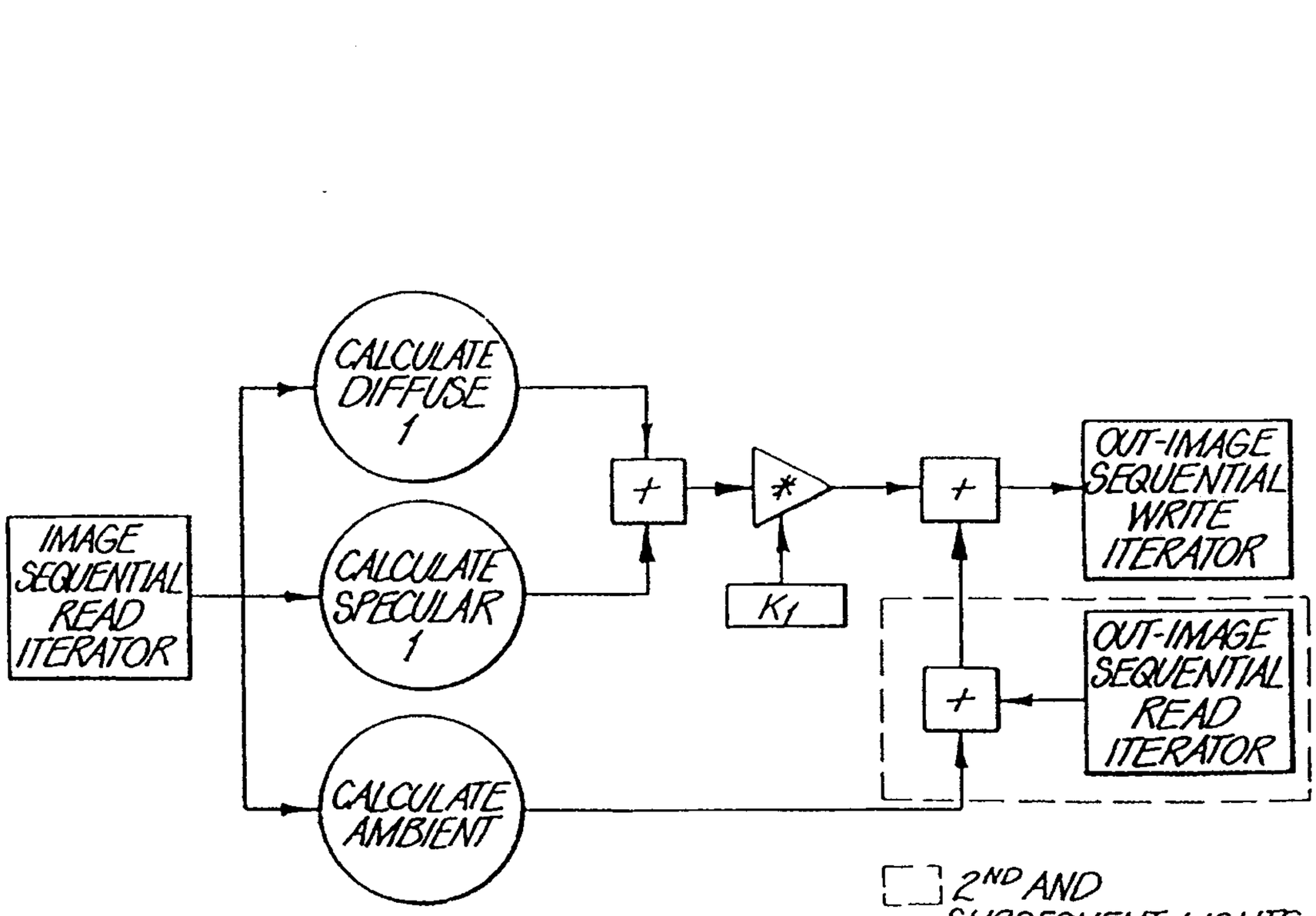

FIG. 147

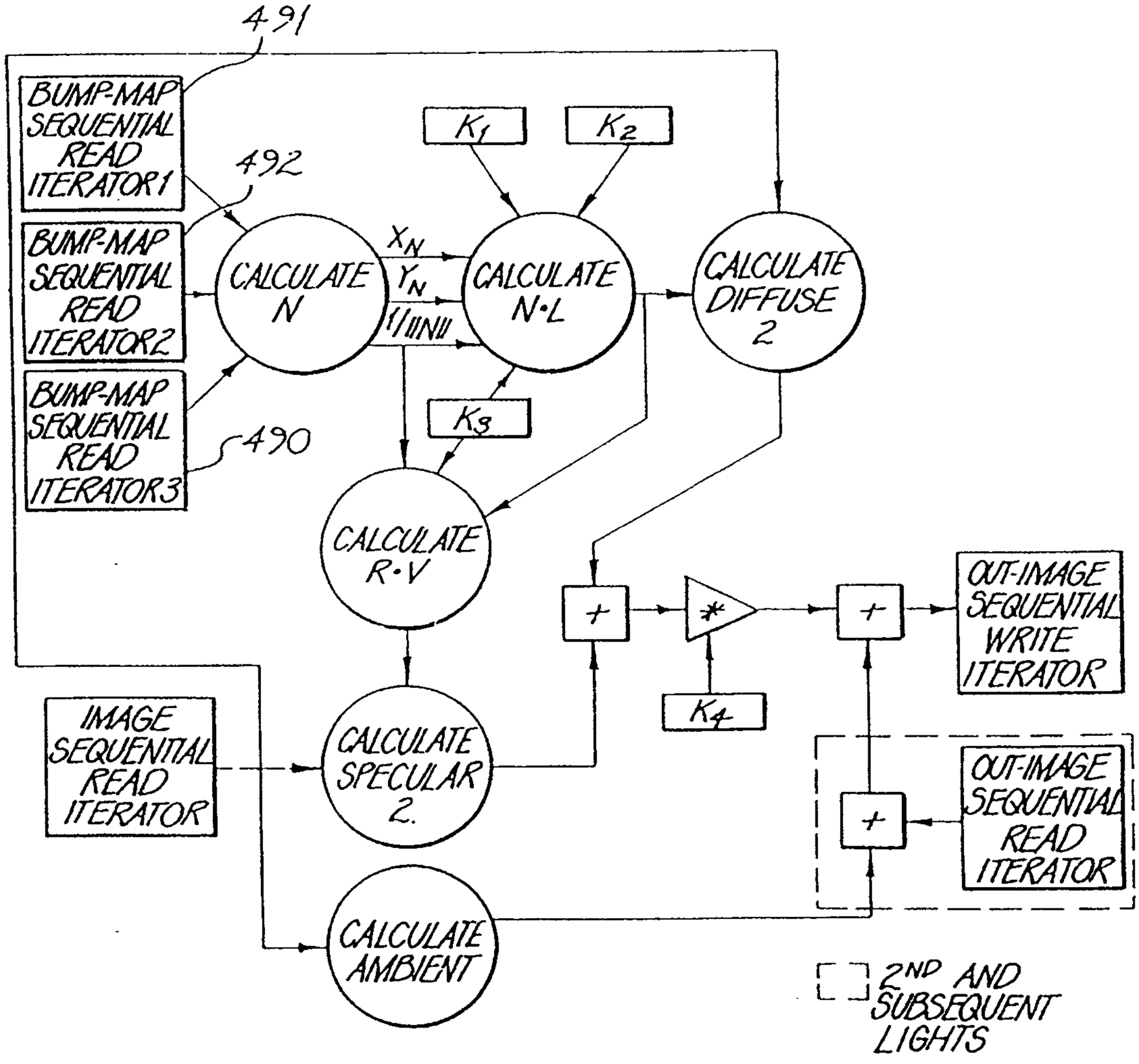
491
BUMP-MAP SEQUENTIAL READ ITERATOR1
492
BUMP-MAP SEQUENTIAL READ ITERATOR2
BUMP-MAP SEQUENTIAL READ ITERATOR3
490
K1
K2
CALCULATE N
XN
YN
1/IINII
CALCULATE N·L
CALCULATE DIFFUSE 2
K3
CALCULATE R·V
+
*
K4
+
OUT-IMAGE SEQUENTIAL WRITE ITERATOR
IMAGE SEQUENTIAL READ ITERATOR
CALCULATE SPECULAR 2.
+
OUT-IMAGE SEQUENTIAL READ ITERATOR
CALCULATE AMBIENT
2ND AND SUBSEQUENT LIGHTS

FIG. 148

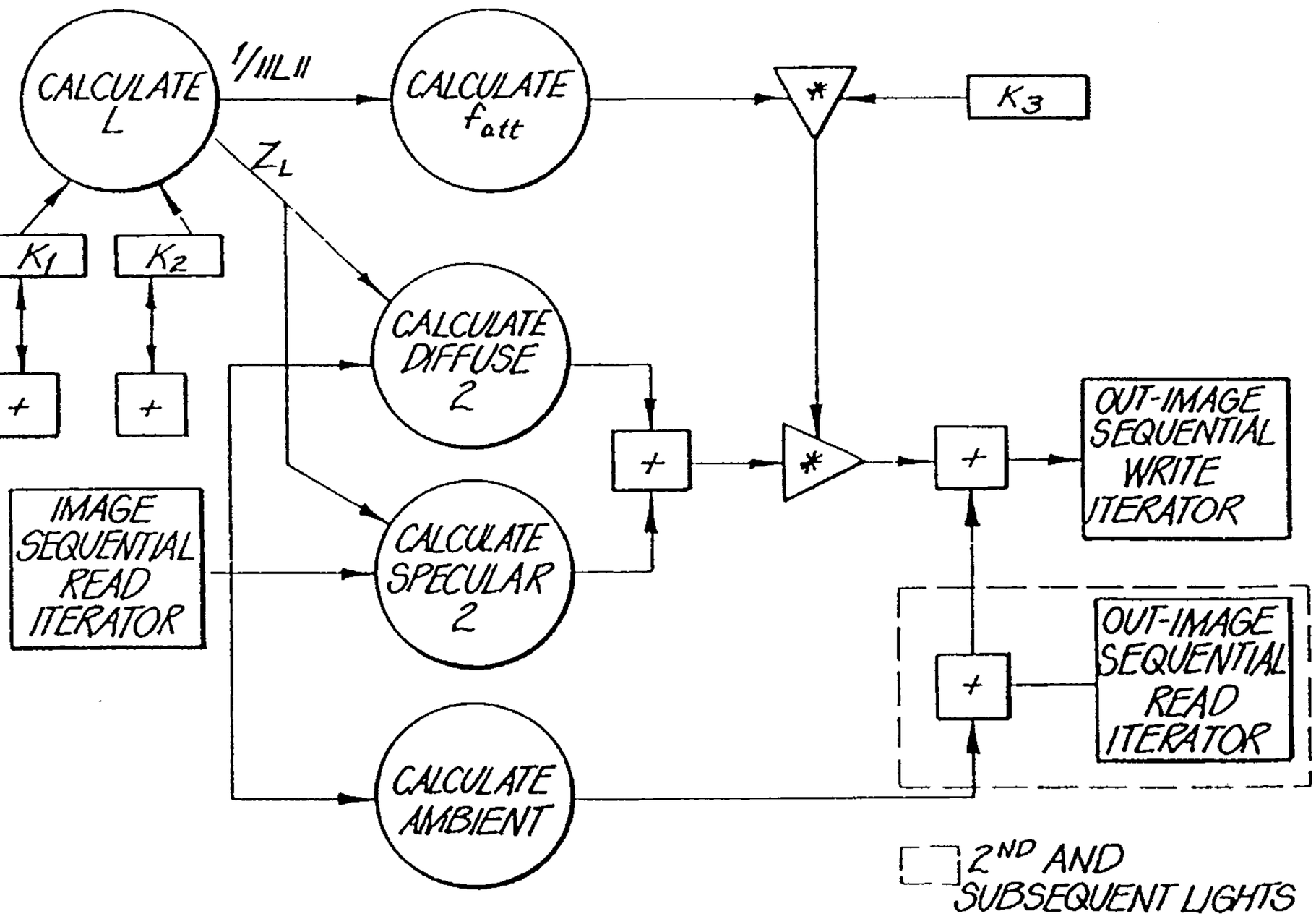
CALCULATE L
1/||L||
CALCULATE f_{att}
K_3
Z_L
K_1
K_2
+
+
CALCULATE DIFFUSE 2
+
*
*
+
OUT-IMAGE SEQUENTIAL WRITE ITERATOR
IMAGE SEQUENTIAL READ ITERATOR
CALCULATE SPECULAR 2
+
OUT-IMAGE SEQUENTIAL READ ITERATOR
CALCULATE AMBIENT
2ND AND SUBSEQUENT LIGHTS

FIG. 149

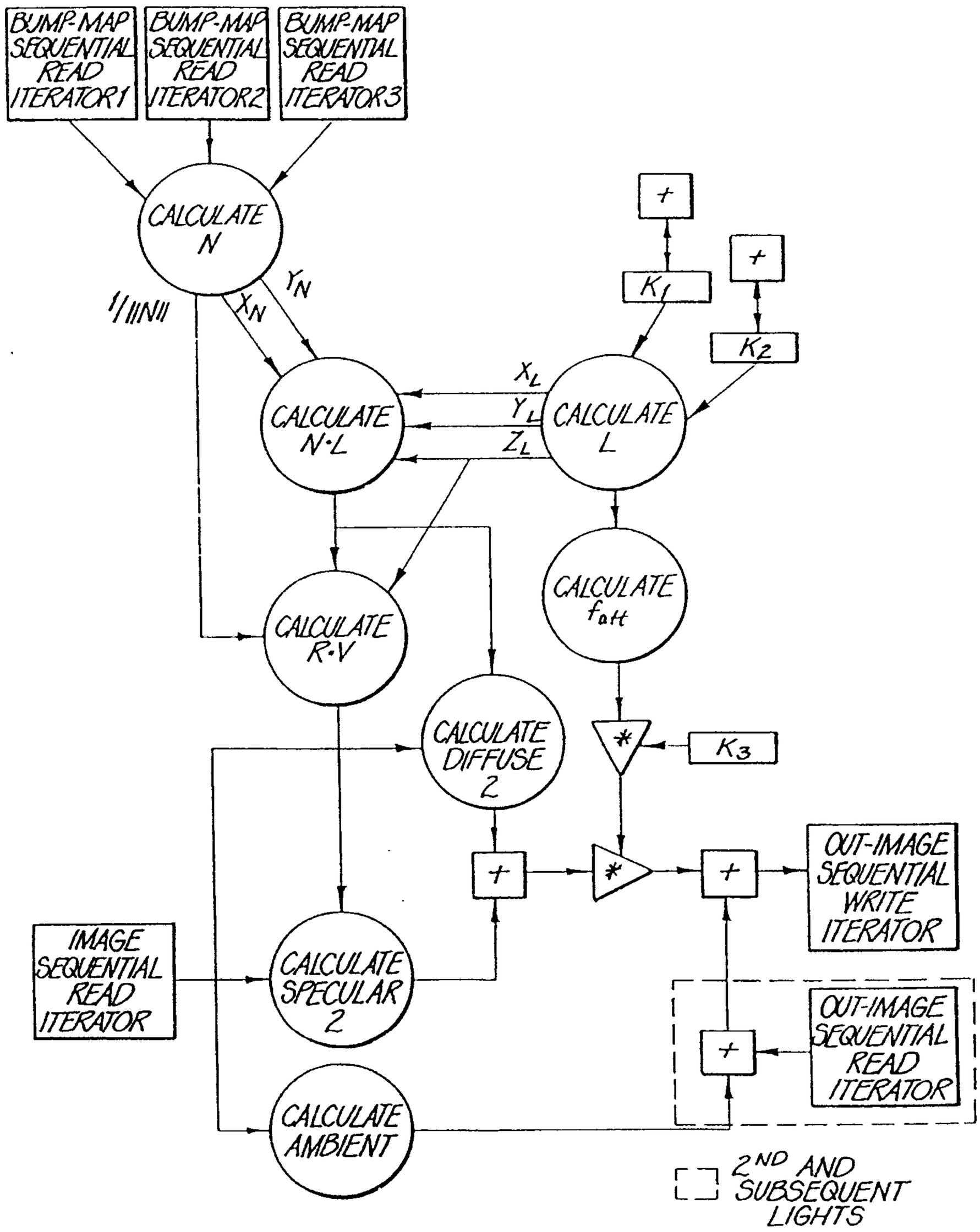
BUMP-MAP SEQUENTIAL READ ITERATOR1
BUMP-MAP SEQUENTIAL READ ITERATOR2
BUMP-MAP SEQUENTIAL READ ITERATOR3
CALCULATE N
1/IINII
X_N
Y_N
+
+
K_1
K_2
CALCULATE N·L
CALCULATE L
X_L
Y_L
Z_L
CALCULATE R·V
CALCULATE f_{att}
CALCULATE DIFFUSE 2
*
K_3
+
*
+
OUT-IMAGE SEQUENTIAL WRITE ITERATOR
IMAGE SEQUENTIAL READ ITERATOR
CALCULATE SPECULAR 2
+
OUT-IMAGE SEQUENTIAL READ ITERATOR
CALCULATE AMBIENT
2ND AND SUBSEQUENT LIGHTS

FIG. 150

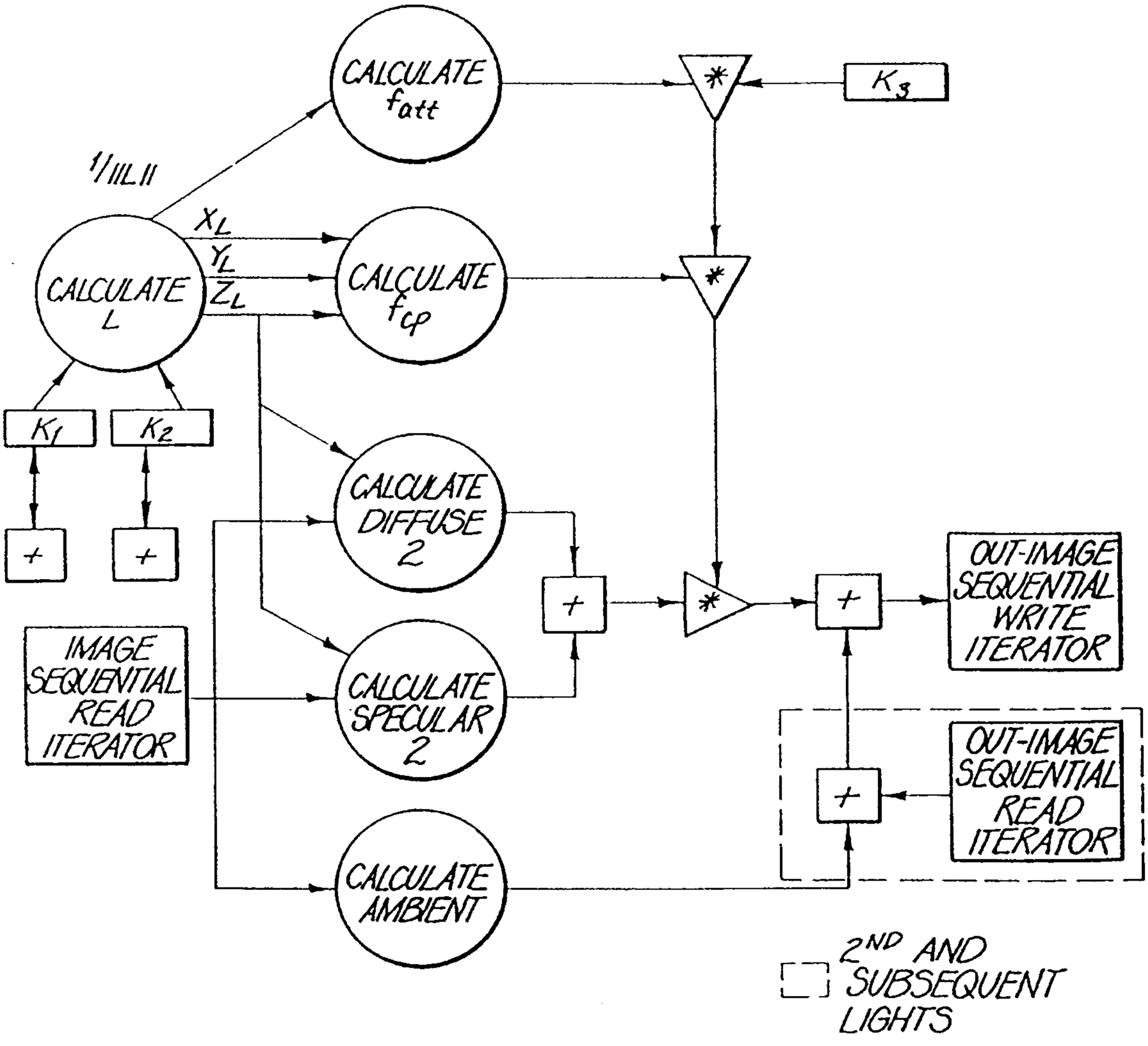
CALCULATE f_{att}
K_3
$1/|IL|^2$
X_L
Y_L
Z_L
CALCULATE L
CALCULATE f_{cp}
K_1
K_2
+
+
CALCULATE DIFFUSE 2
IMAGE SEQUENTIAL READ ITERATOR
CALCULATE SPECULAR 2
CALCULATE AMBIENT
+
+
OUT-IMAGE SEQUENTIAL WRITE ITERATOR
OUT-IMAGE SEQUENTIAL READ ITERATOR
2ND AND SUBSEQUENT LIGHTS

FIG. 151

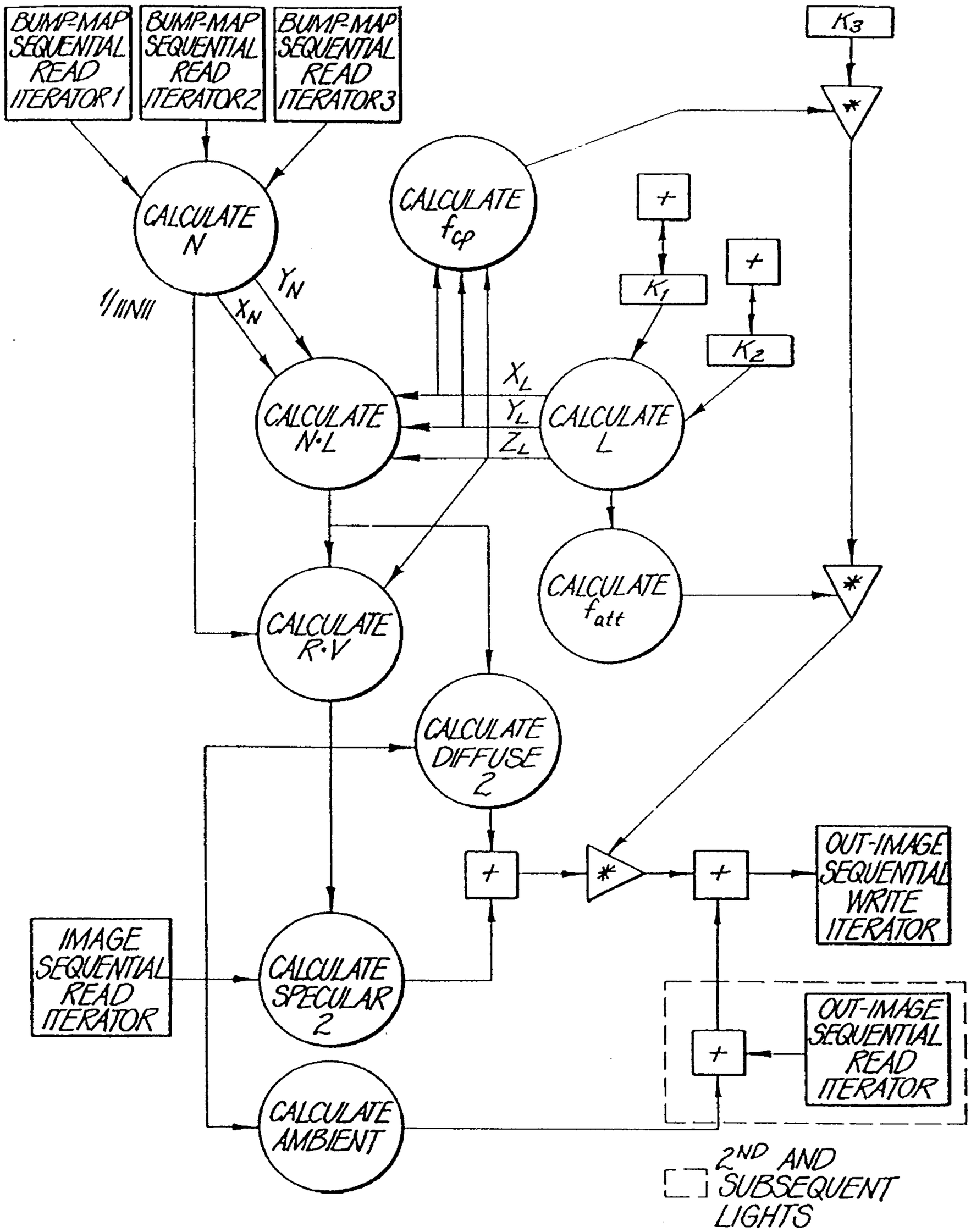
BUMP-MAP SEQUENTIAL READ ITERATOR 1
BUMP-MAP SEQUENTIAL READ ITERATOR 2
BUMP-MAP SEQUENTIAL READ ITERATOR 3
K3
CALCULATE N
CALCULATE fcp
+
+
K1
K2
1/||N||
XN
YN
XL
YL
ZL
CALCULATE N·L
CALCULATE L
CALCULATE R·V
CALCULATE fatt
CALCULATE DIFFUSE 2
IMAGE SEQUENTIAL READ ITERATOR
CALCULATE SPECULAR 2
CALCULATE AMBIENT
OUT-IMAGE SEQUENTIAL WRITE ITERATOR
OUT-IMAGE SEQUENTIAL READ ITERATOR
2ND AND SUBSEQUENT LIGHTS

FIG. 152

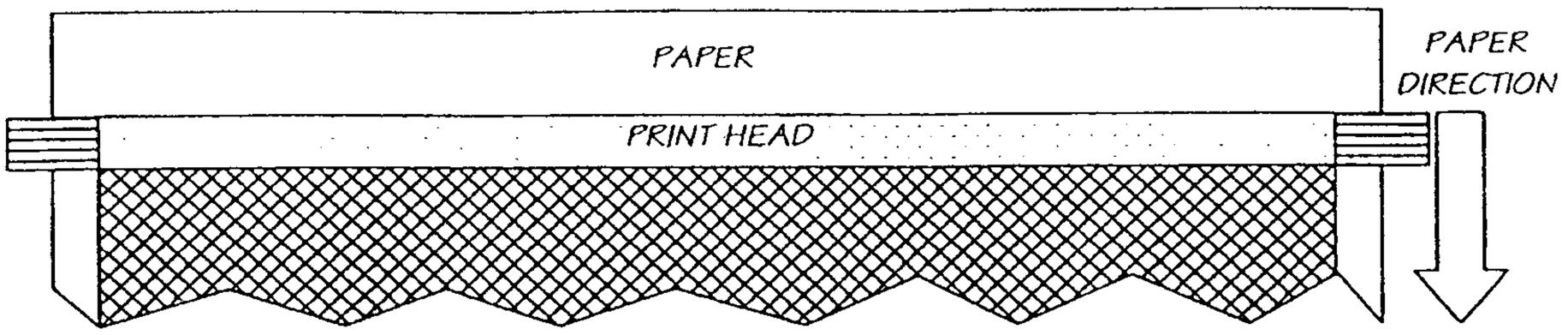

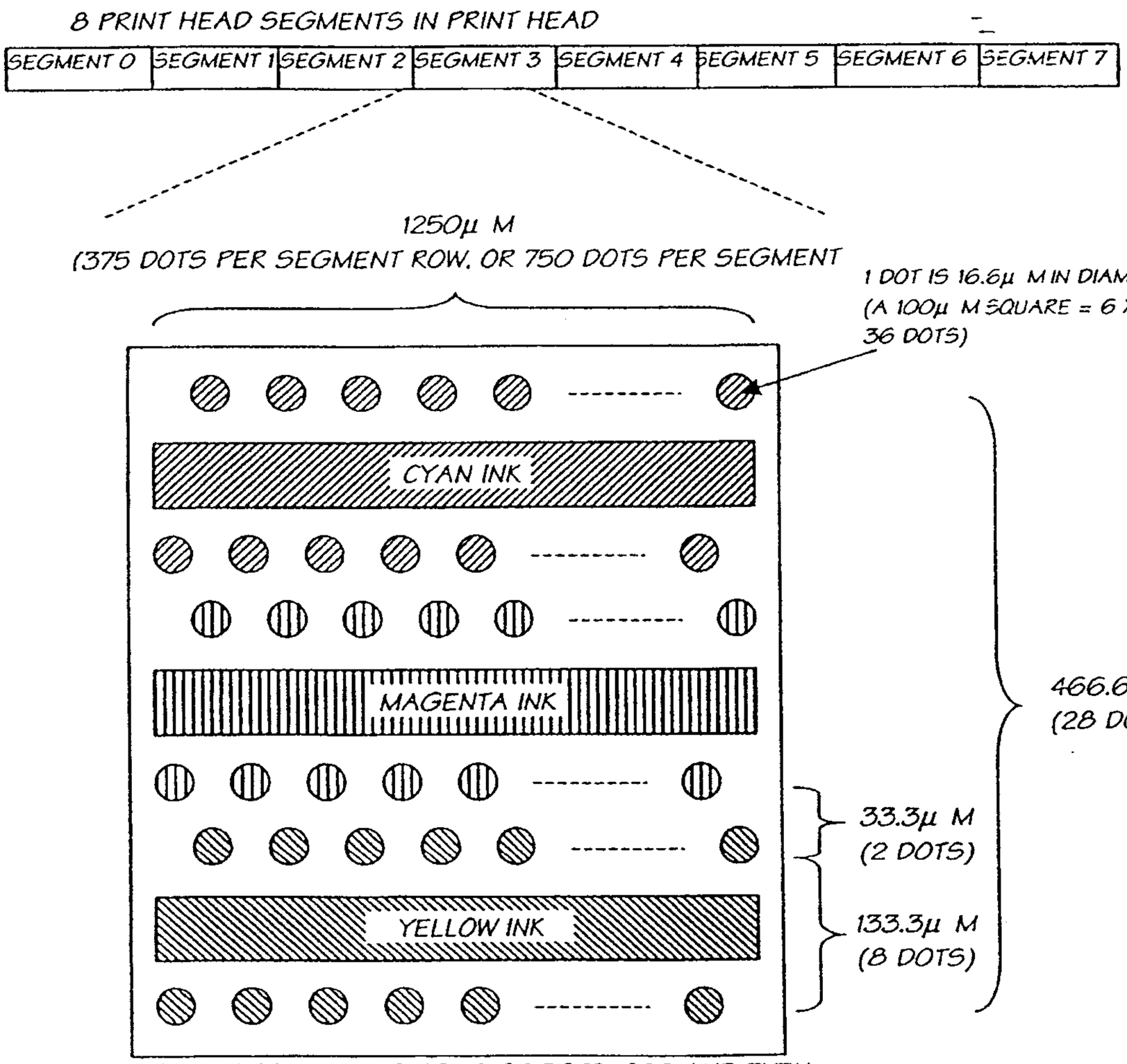

EACH SEGMENT CONTAINS 6 ROWS OF DOTS: ODD AND EVEN

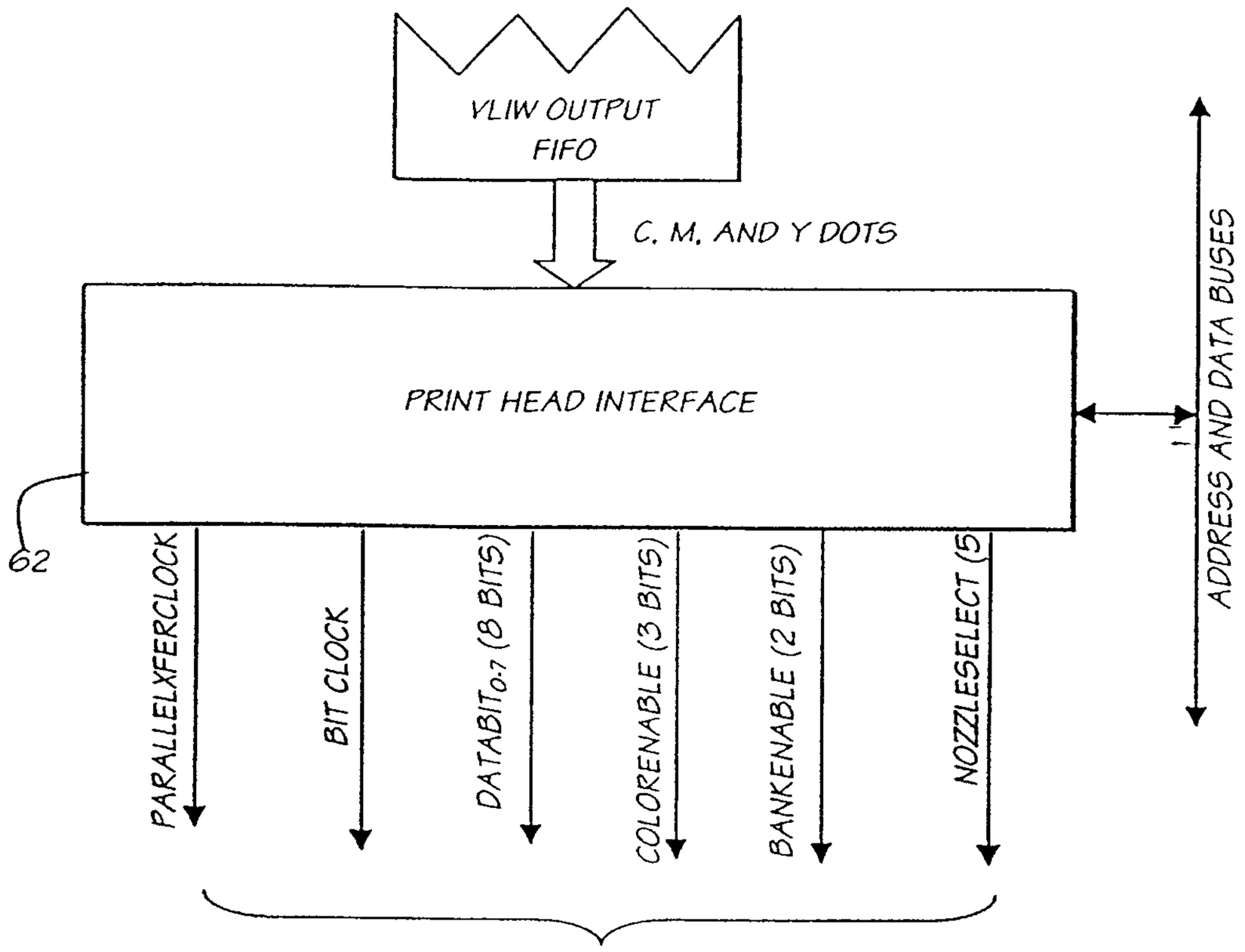

FIG. 154

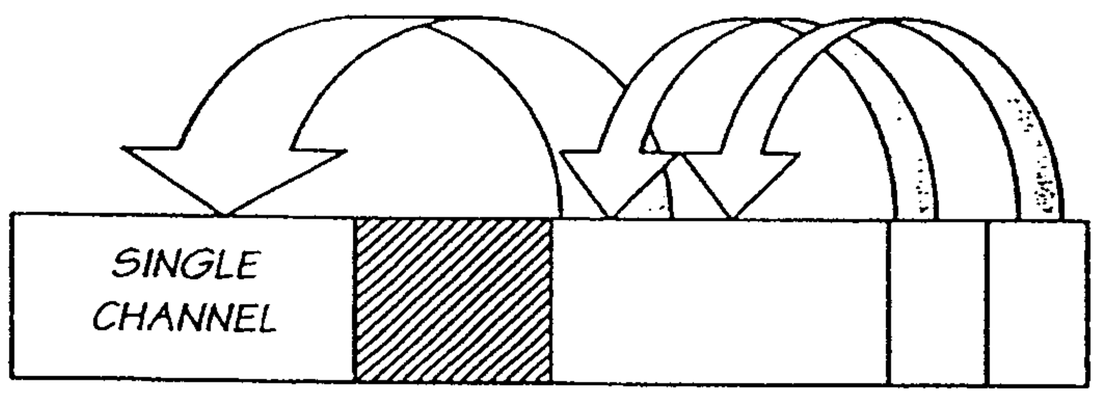

FIG. 155

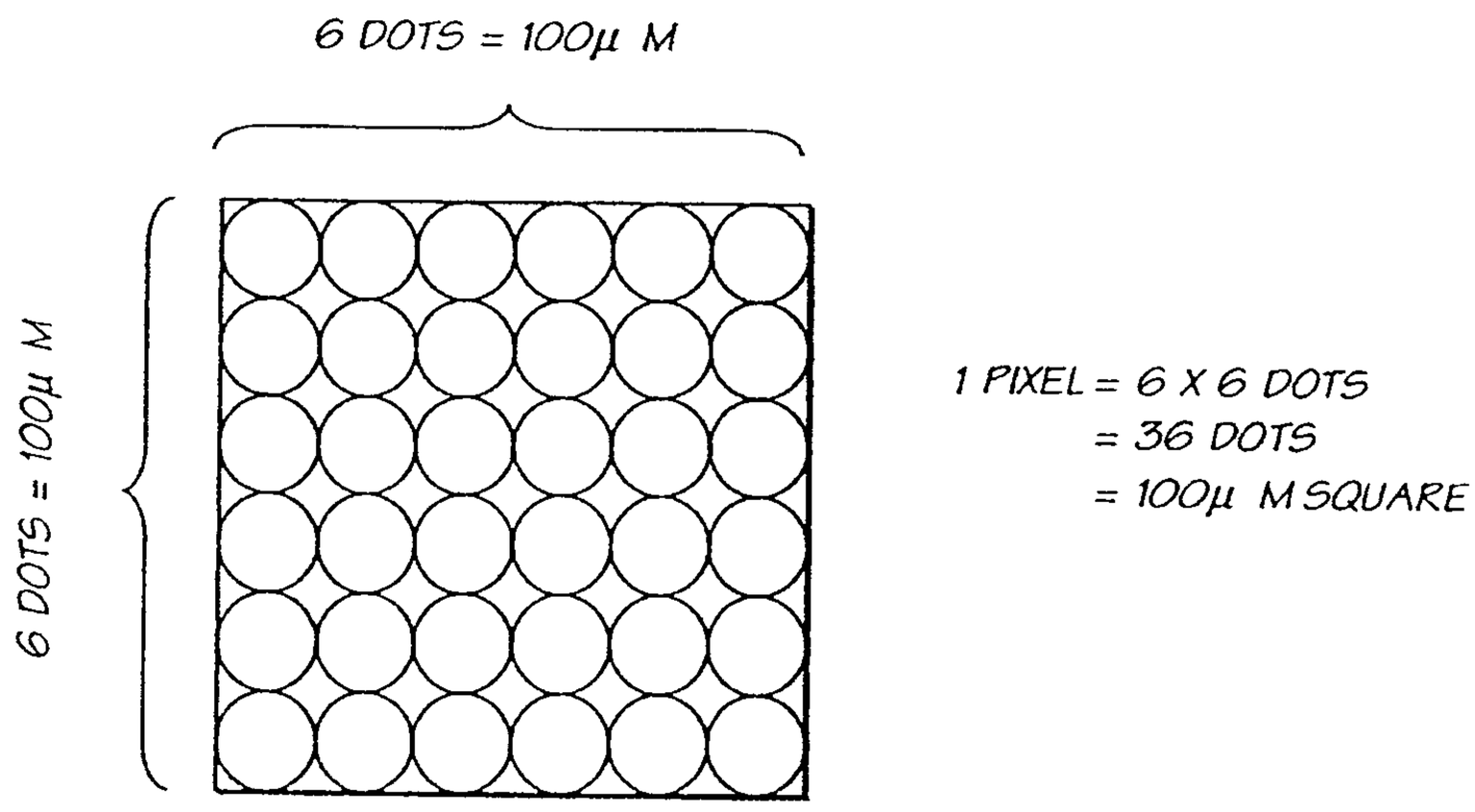
6 DOTS = 100μ M
6 DOTS = 100μ M
1 PIXEL = 6 X 6 DOTS
= 36 DOTS
= 100μ M SQUARE

FIG. 156

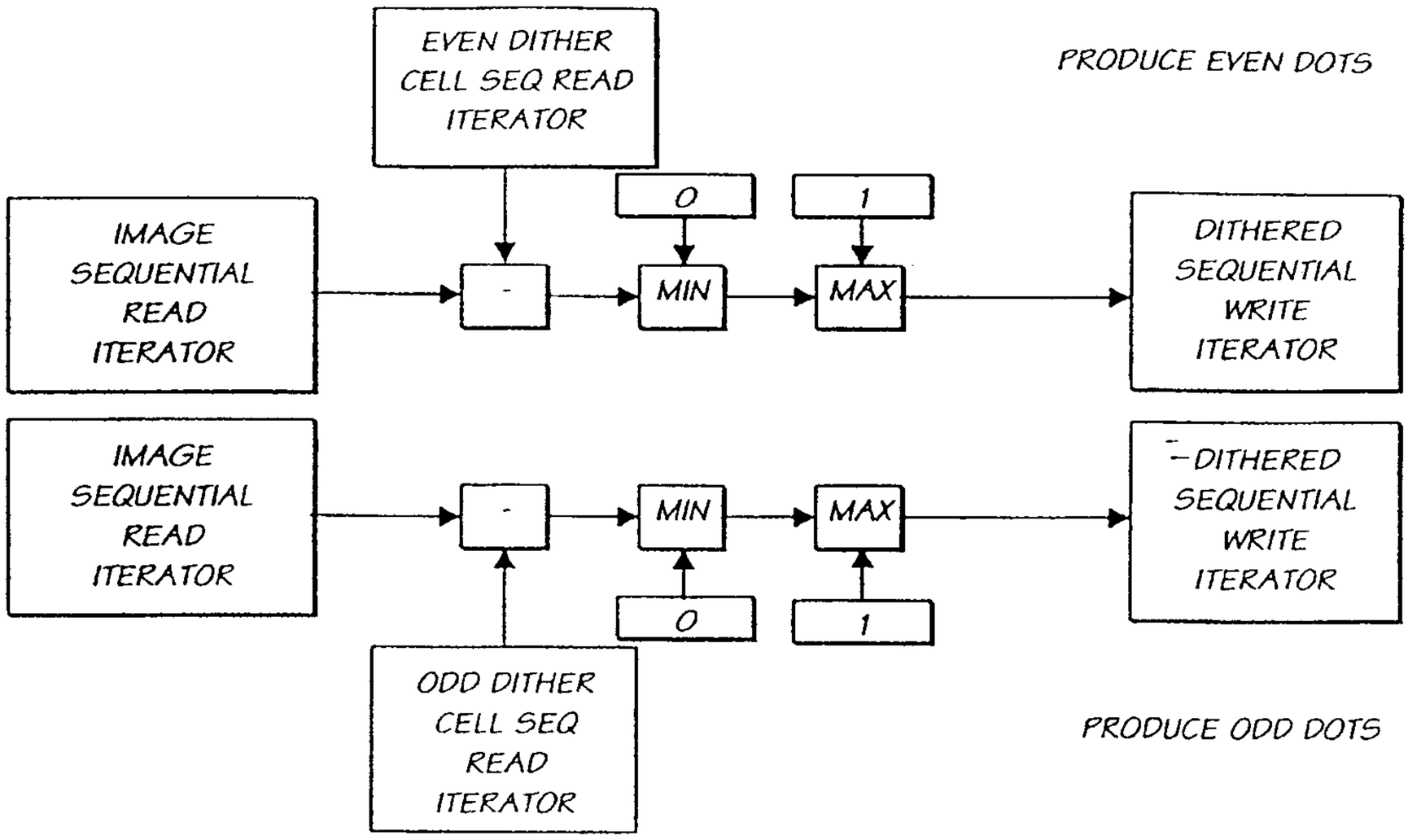
EVEN DITHER CELL SEQ READ ITERATOR
PRODUCE EVEN DOTS
0
1
IMAGE SEQUENTIAL READ ITERATOR
-
MIN
MAX
DITHERED SEQUENTIAL WRITE ITERATOR
IMAGE SEQUENTIAL READ ITERATOR
-
MIN
MAX
DITHERED SEQUENTIAL WRITE ITERATOR
0
1
ODD DITHER CELL SEQ READ ITERATOR
PRODUCE ODD DOTS

FIG. 157

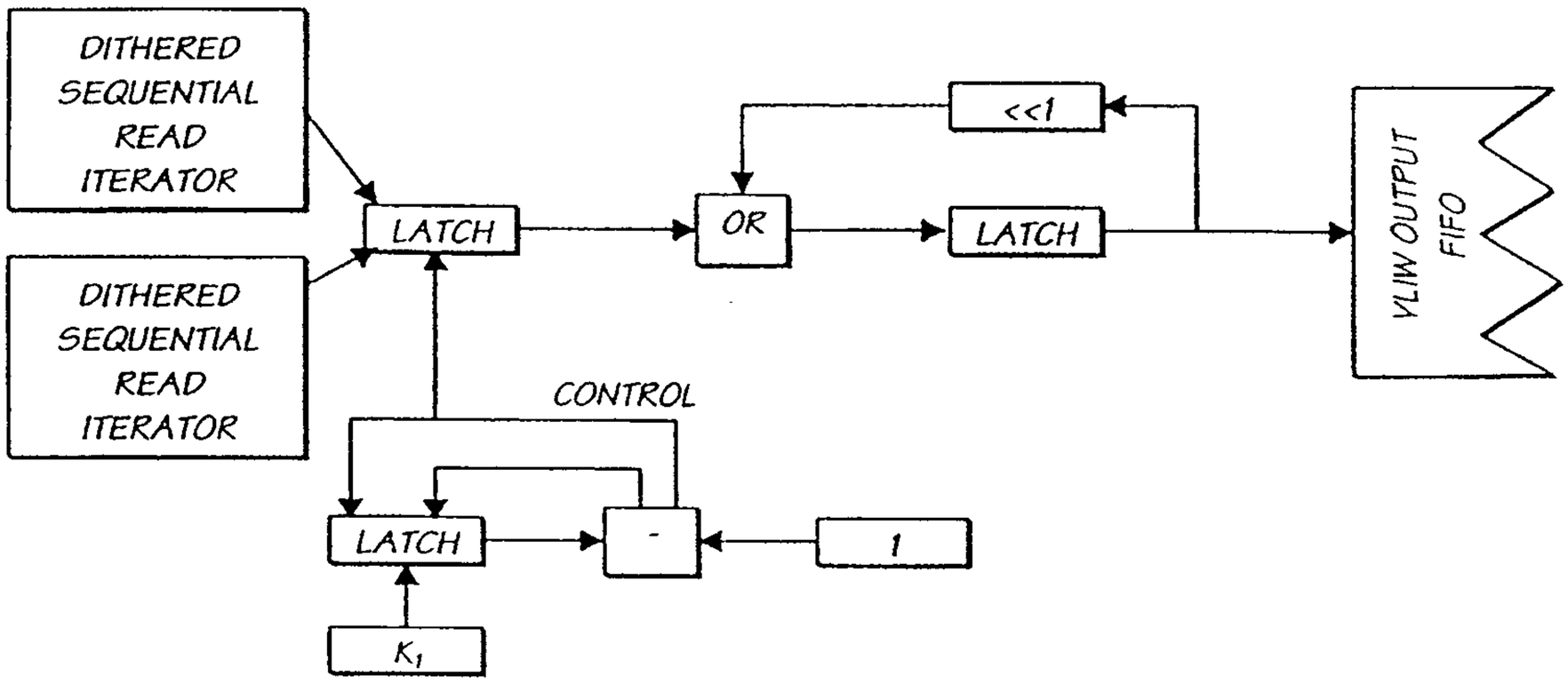
DITHERED SEQUENTIAL READ ITERATOR
DITHERED SEQUENTIAL READ ITERATOR
LATCH
OR
<<1
LATCH
VLIW OUTPUT FIFO
CONTROL
LATCH
-
1
K1

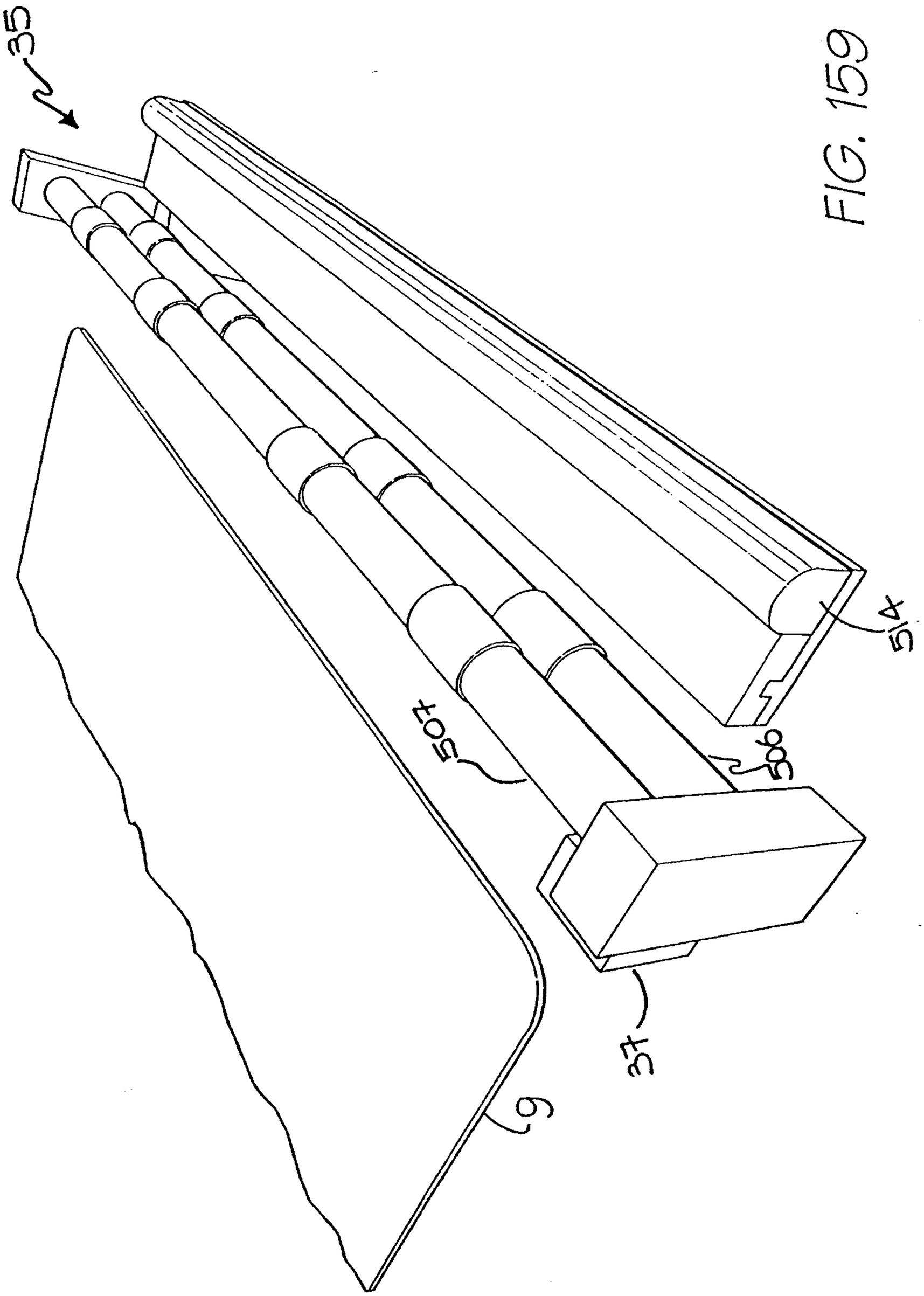

FIG. 15

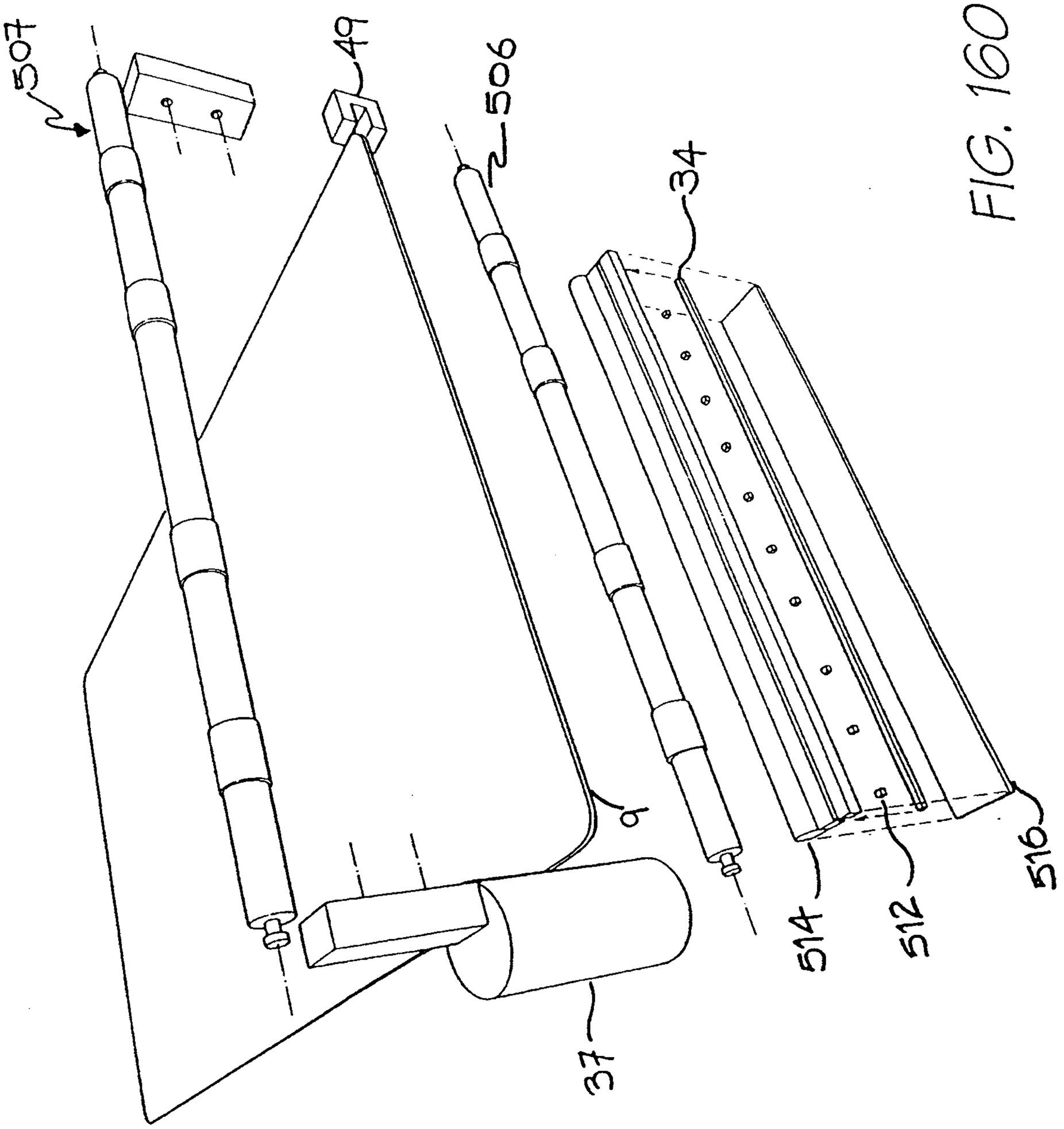

FIG. 160

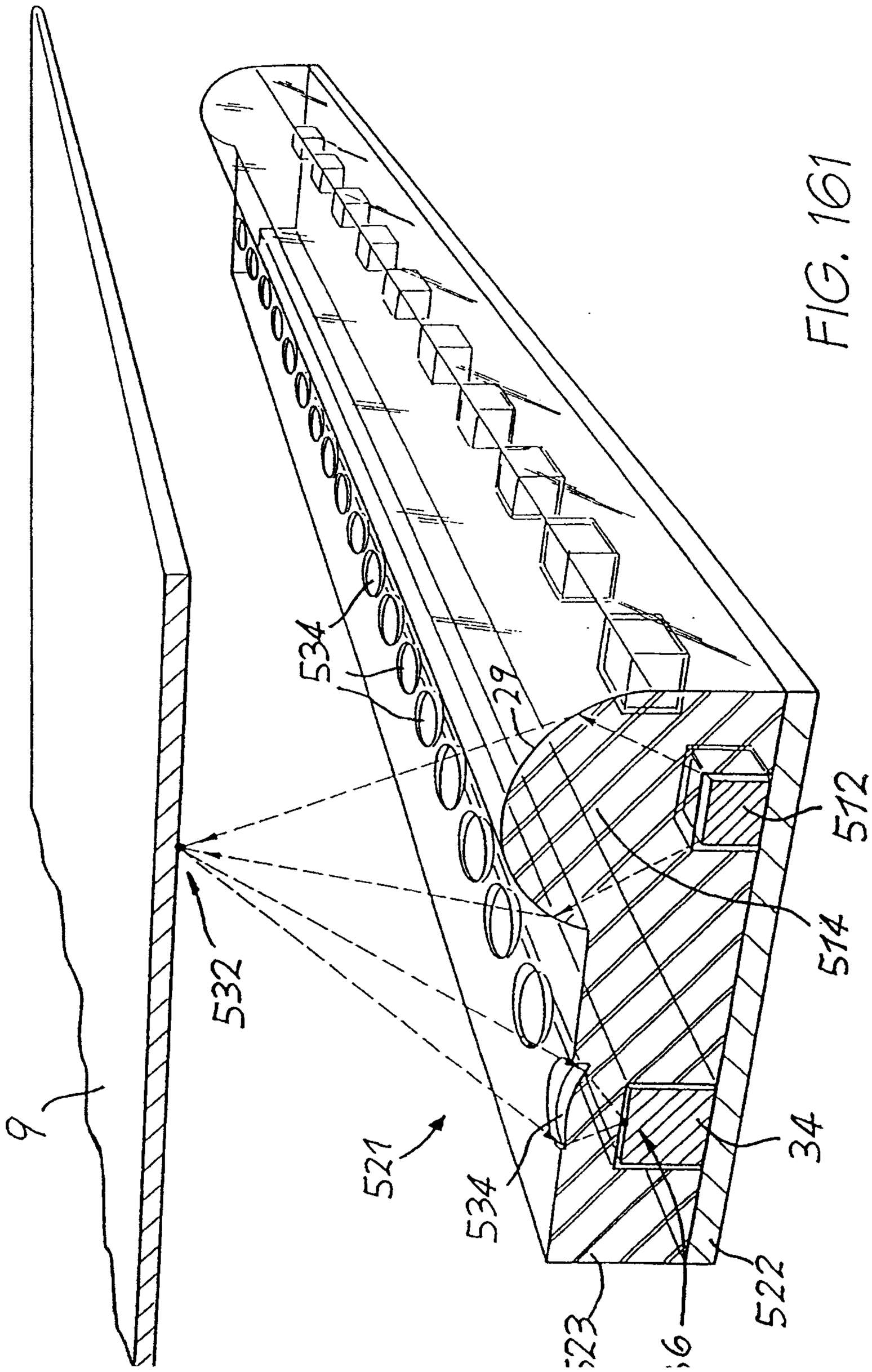

FIG. 161

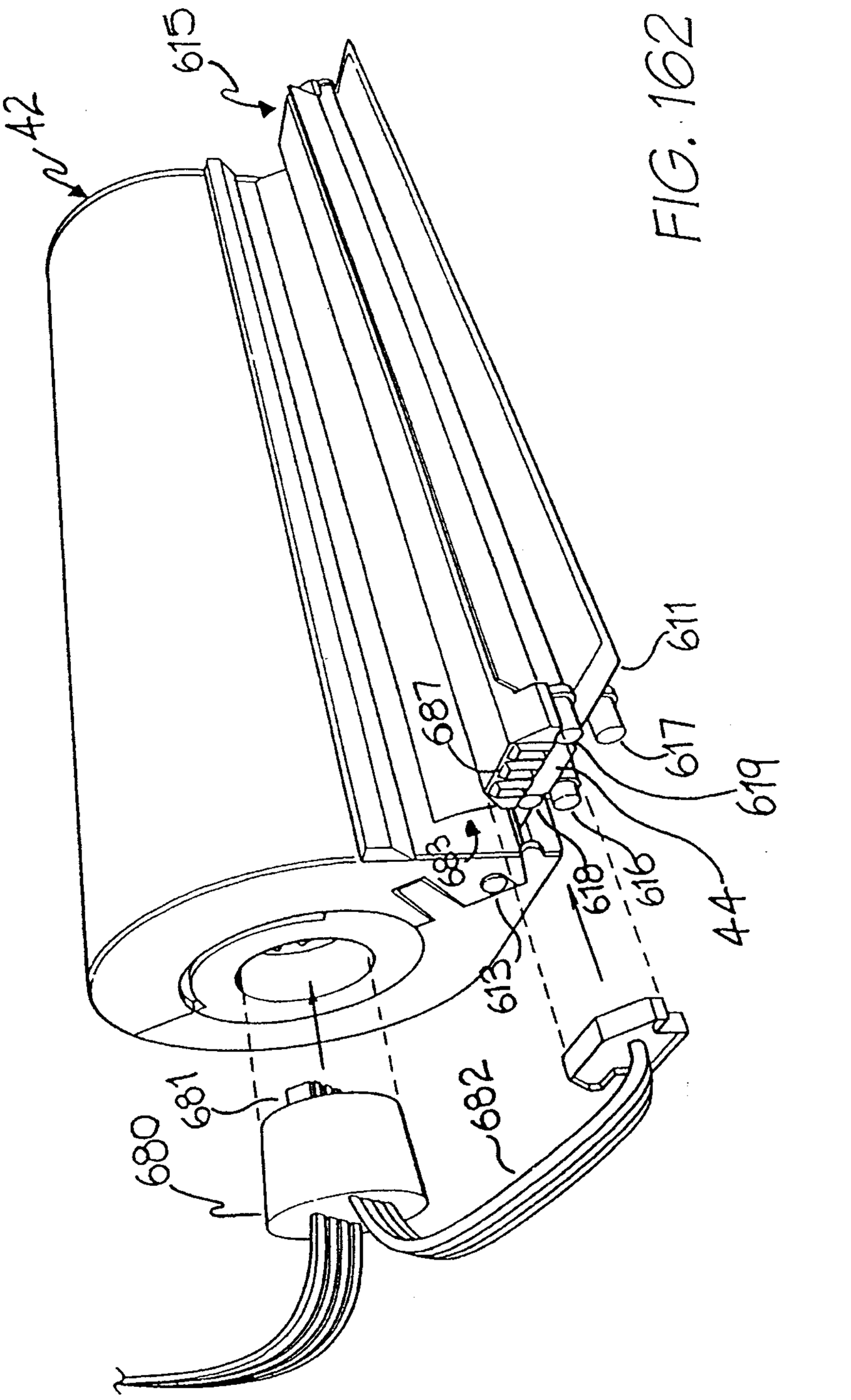

FIG. 162

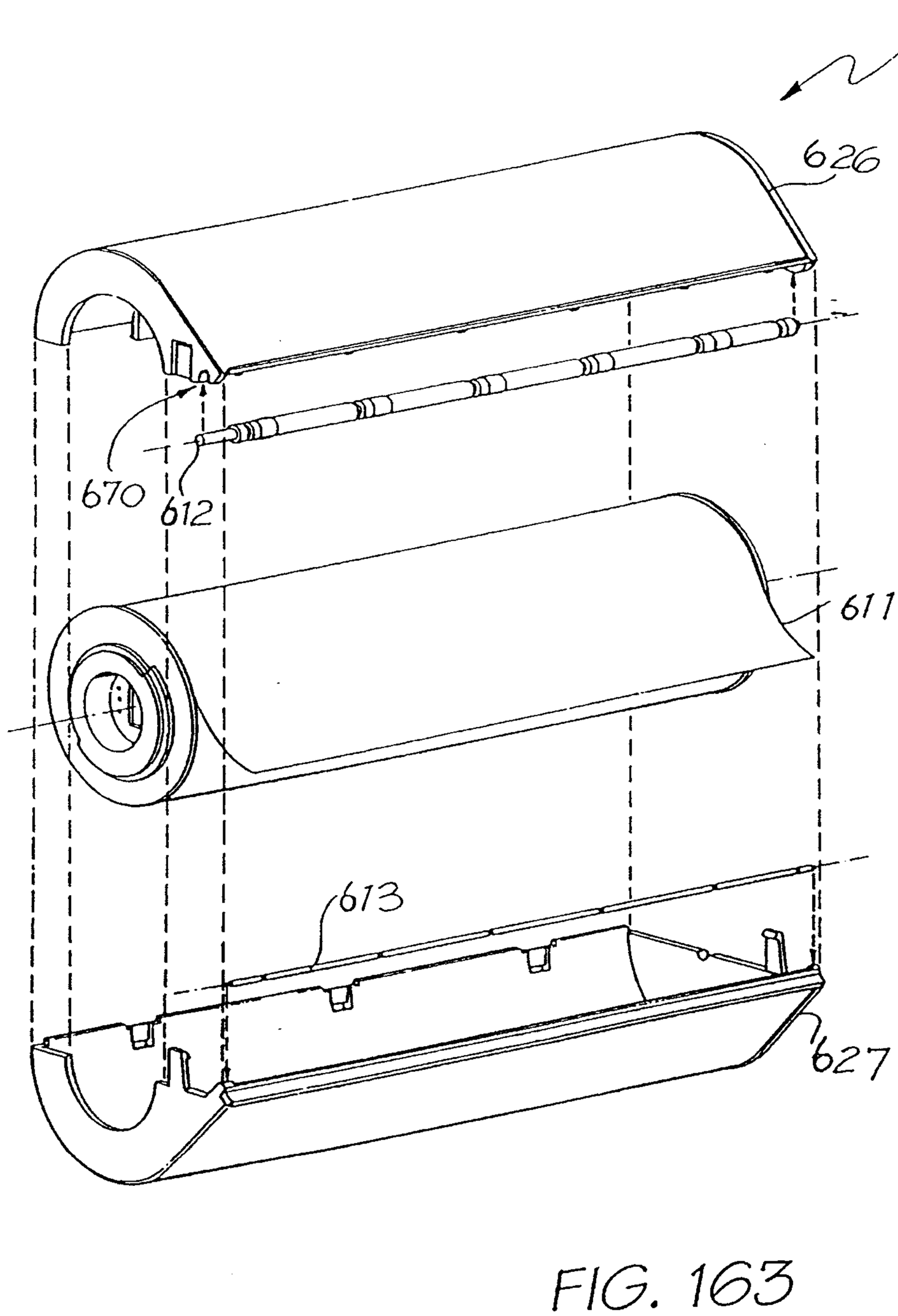

FIG. 163

99 / 246

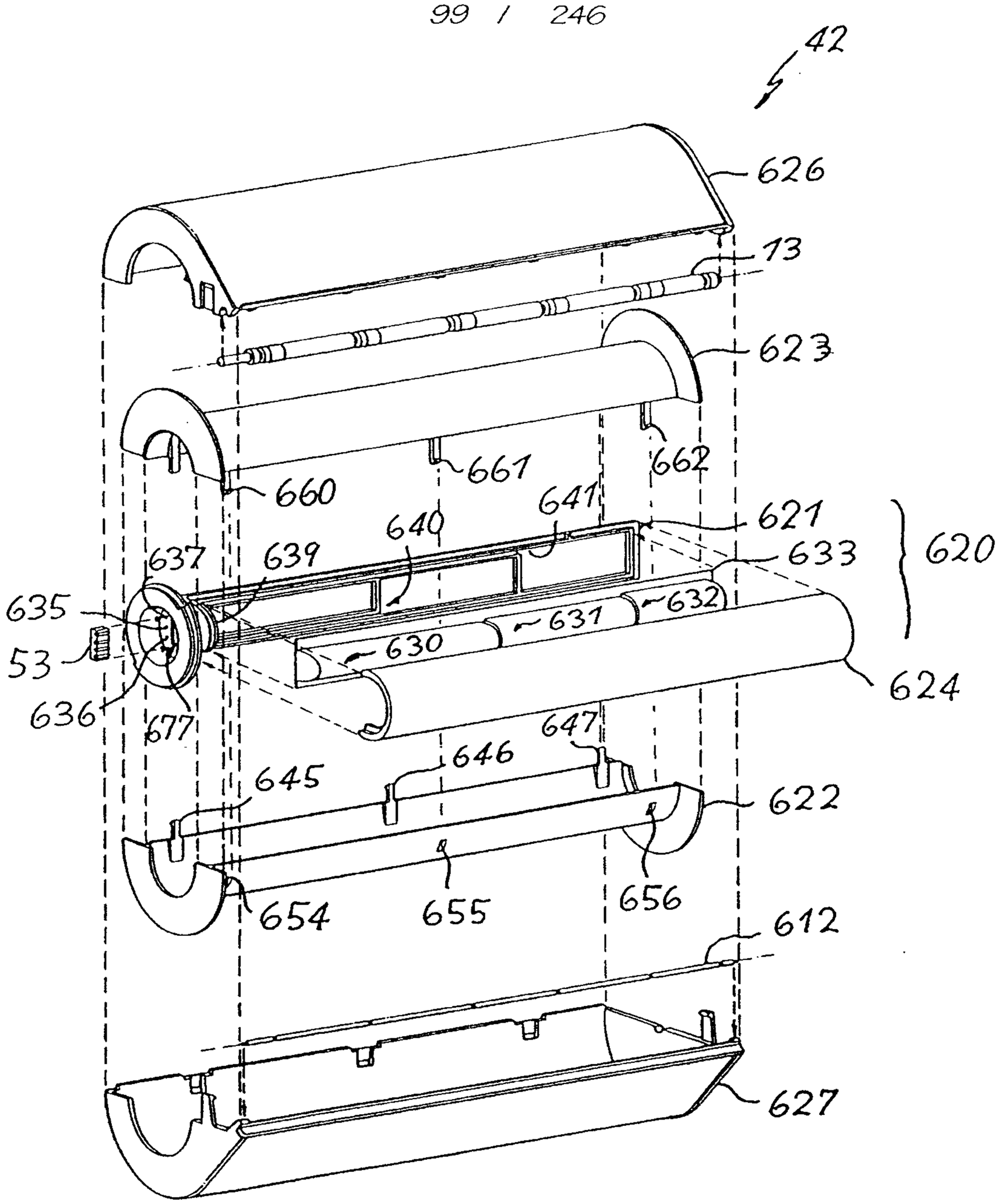

FIG. 164

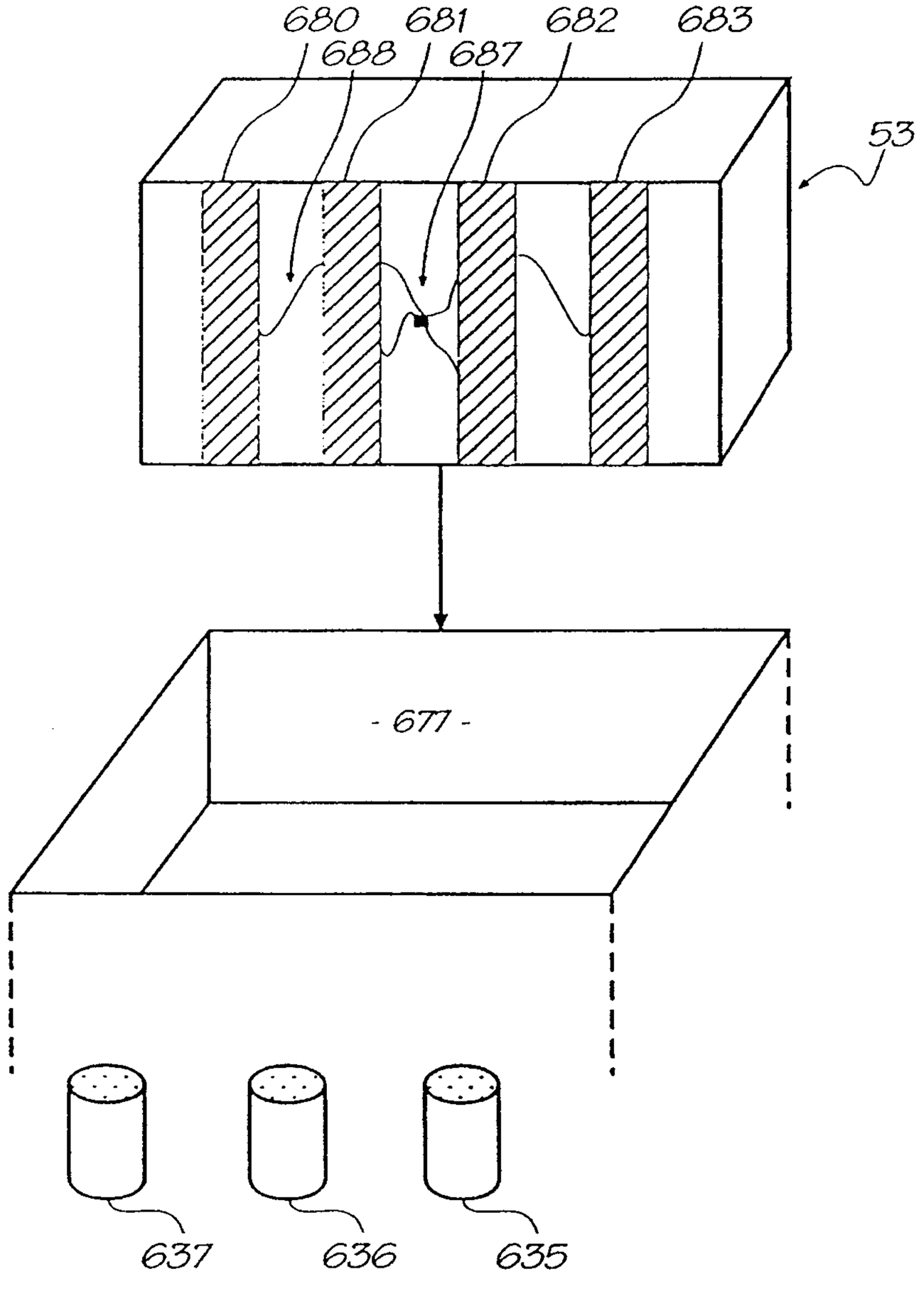

FIG. 165

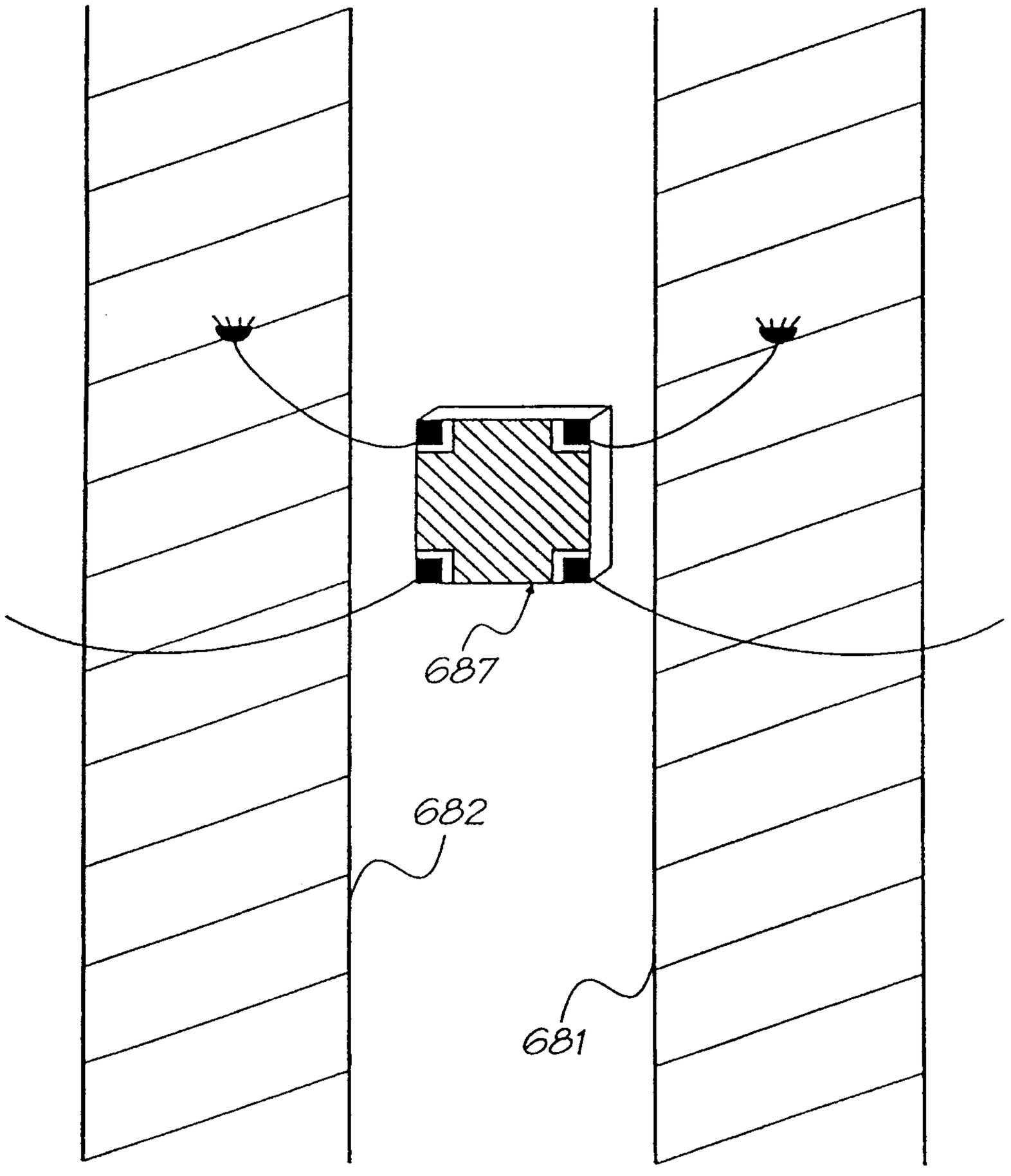

FIG. 166

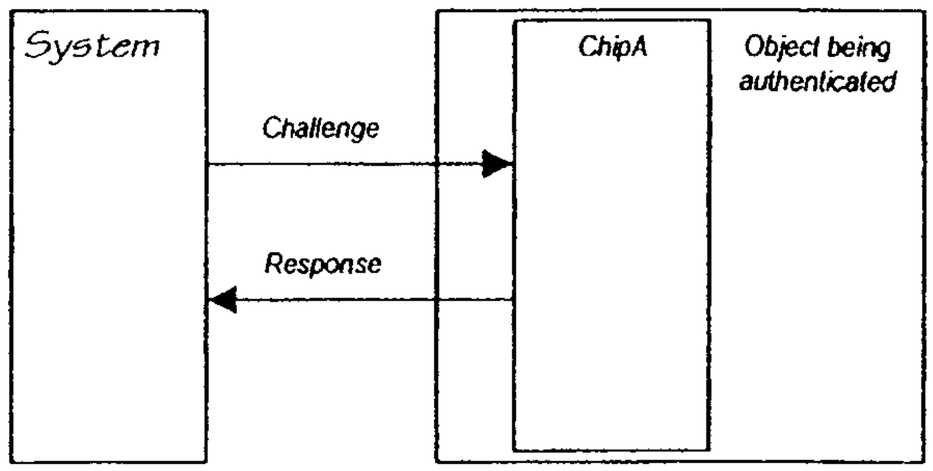

FIG. 167

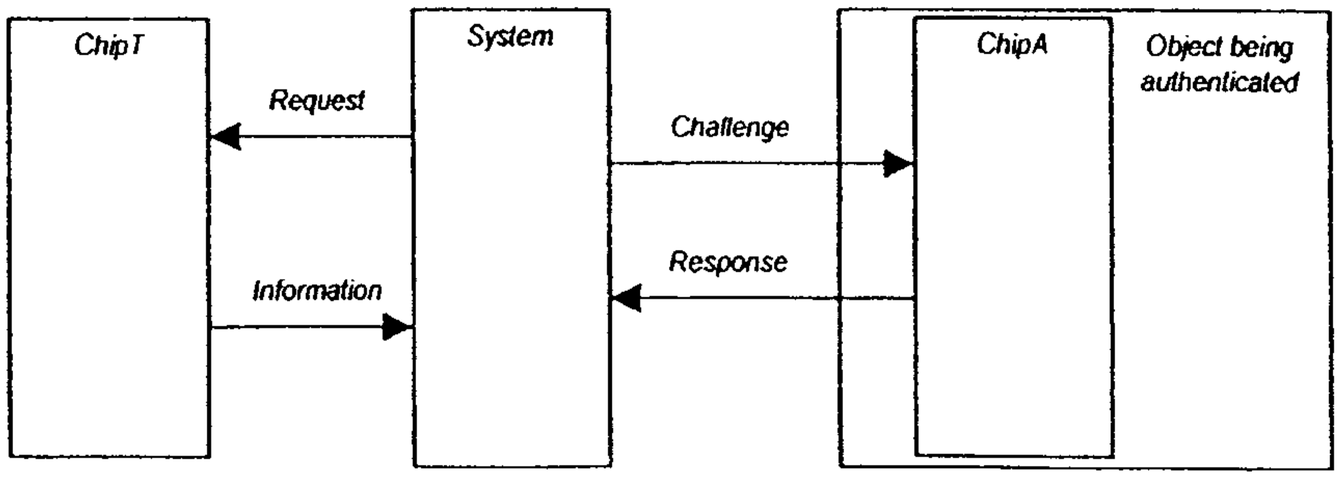

FIG. 168

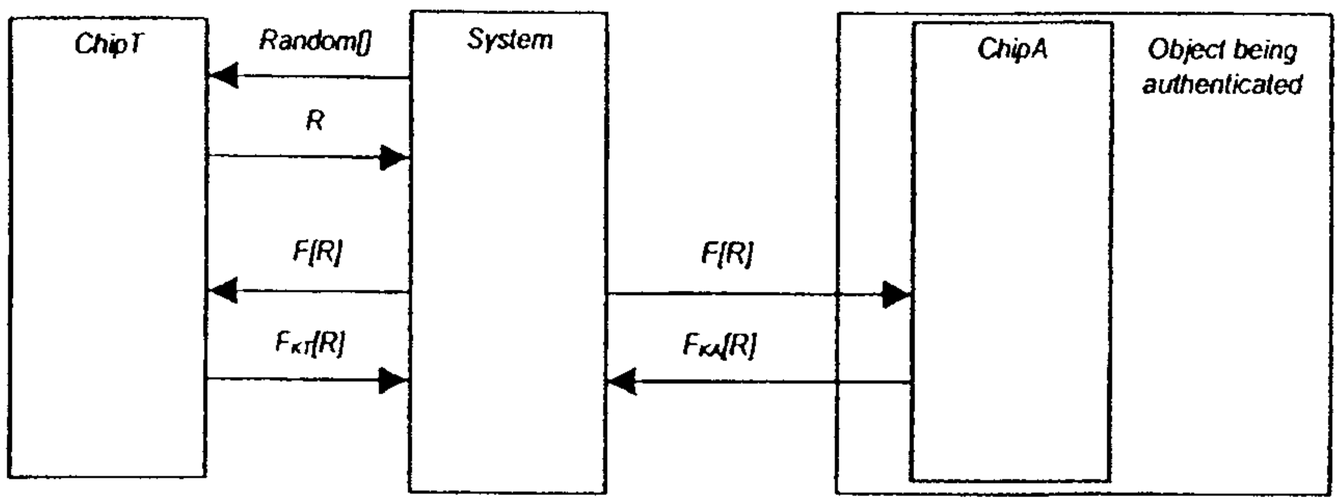

FIG. 169

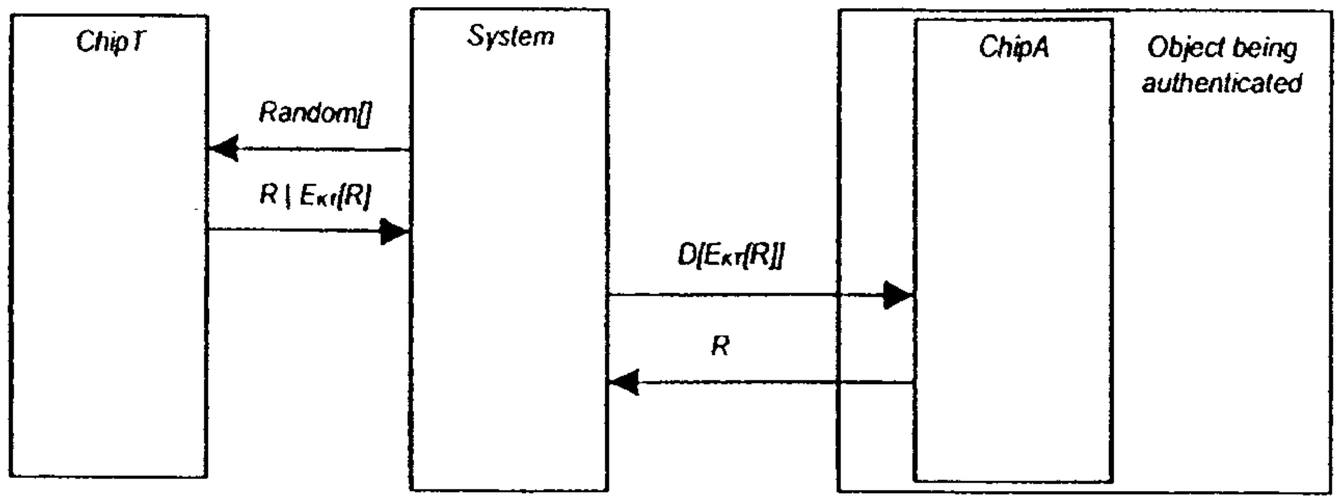

FIG. 170

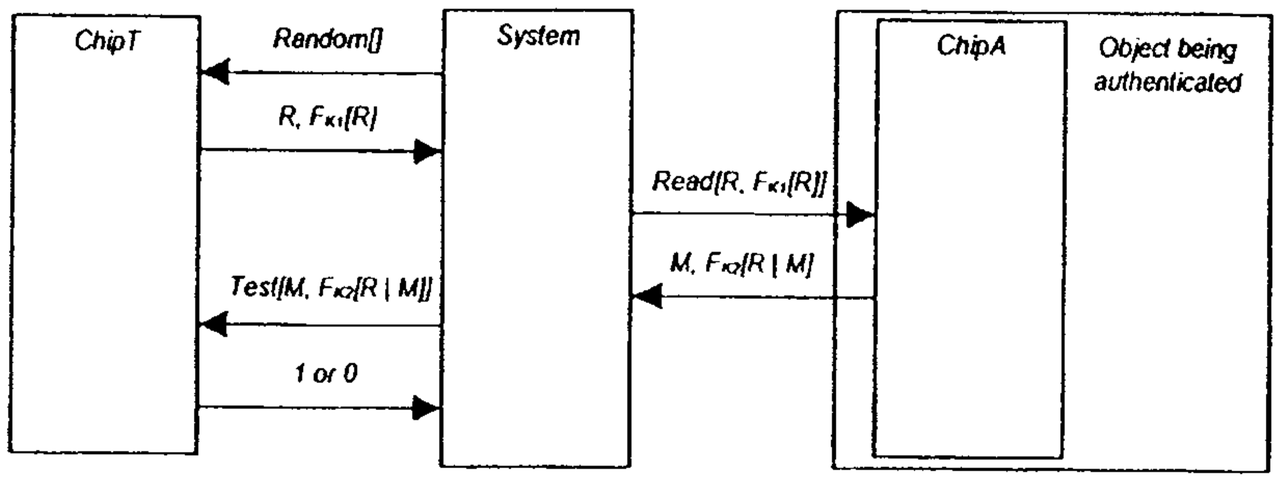

FIG. 171

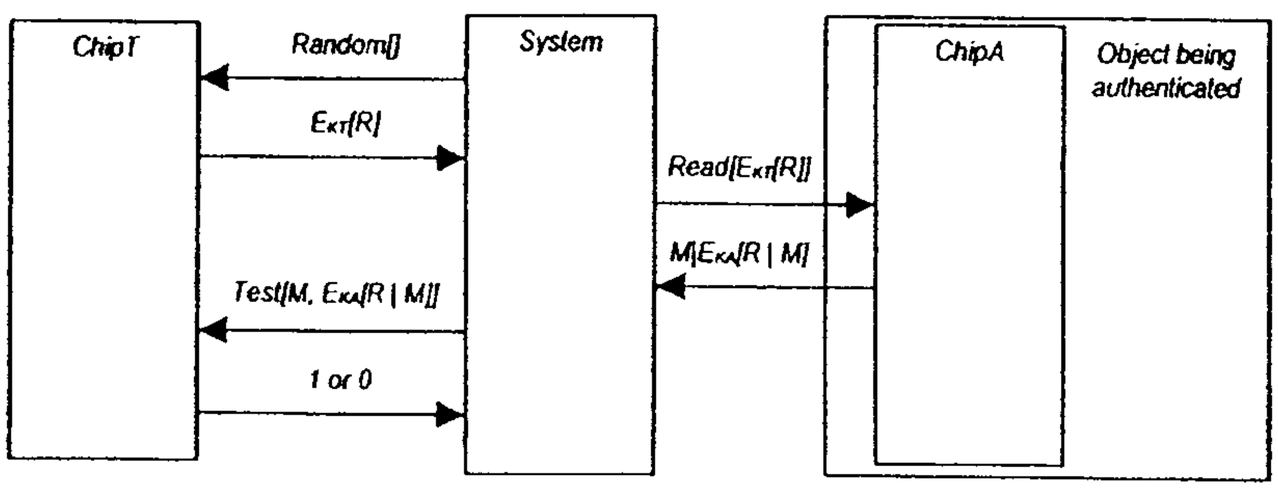

FIG. 172

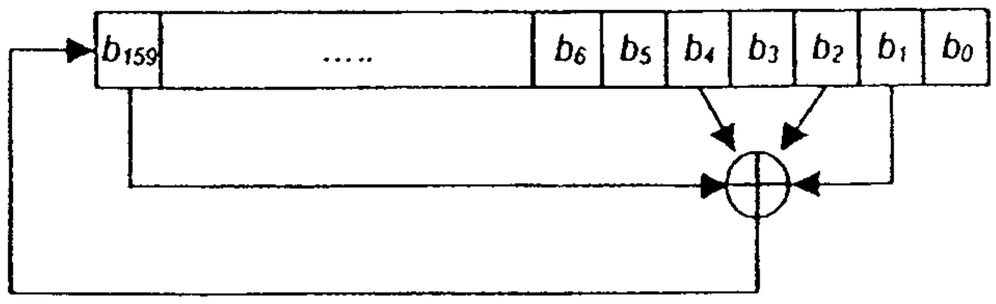

FIG. 173

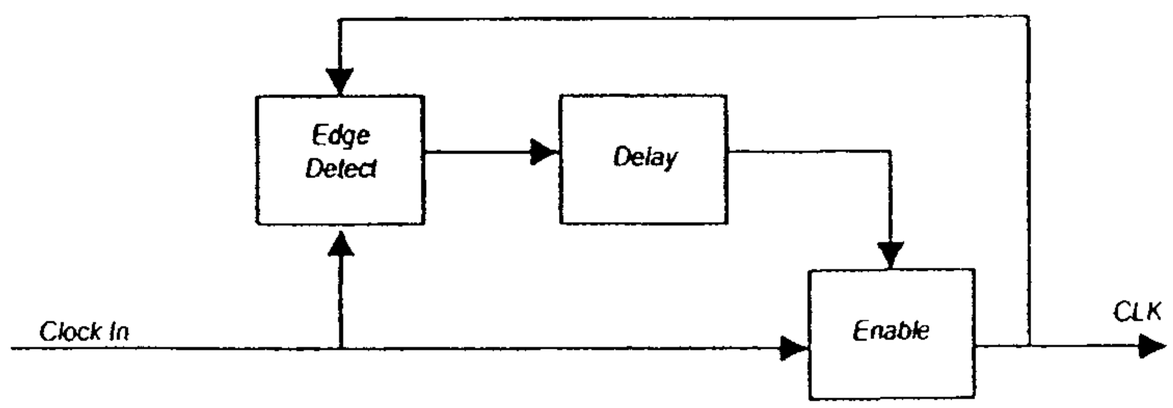

FIG. 174

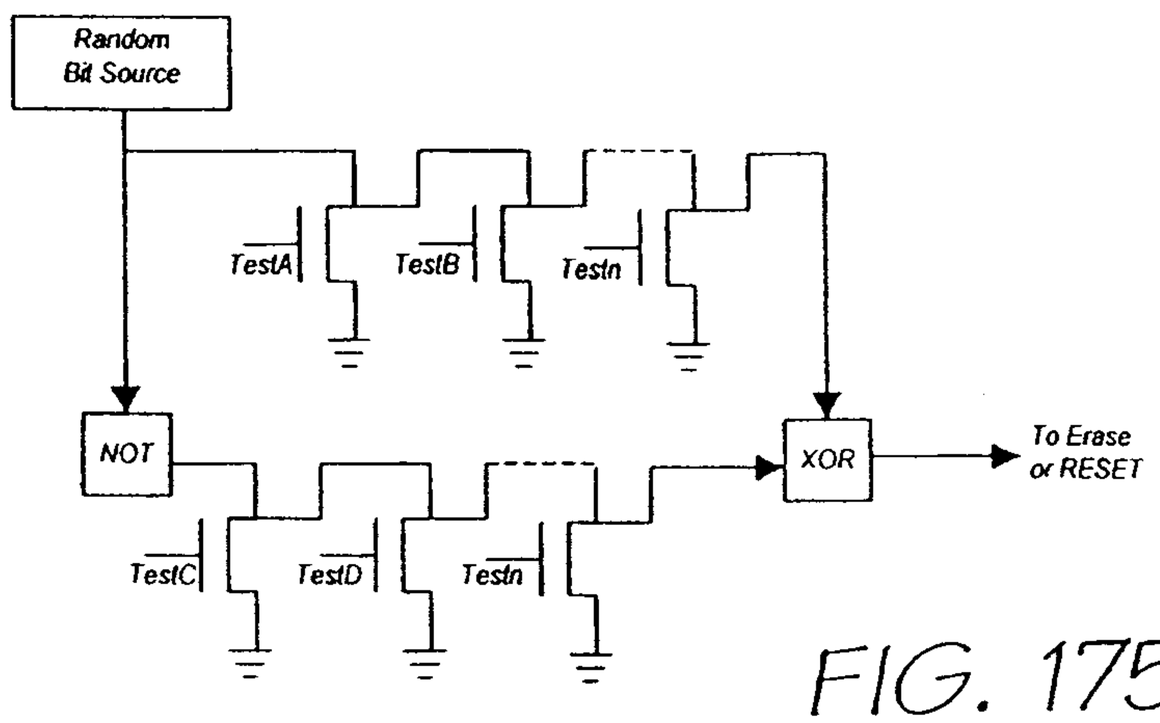

FIG. 175

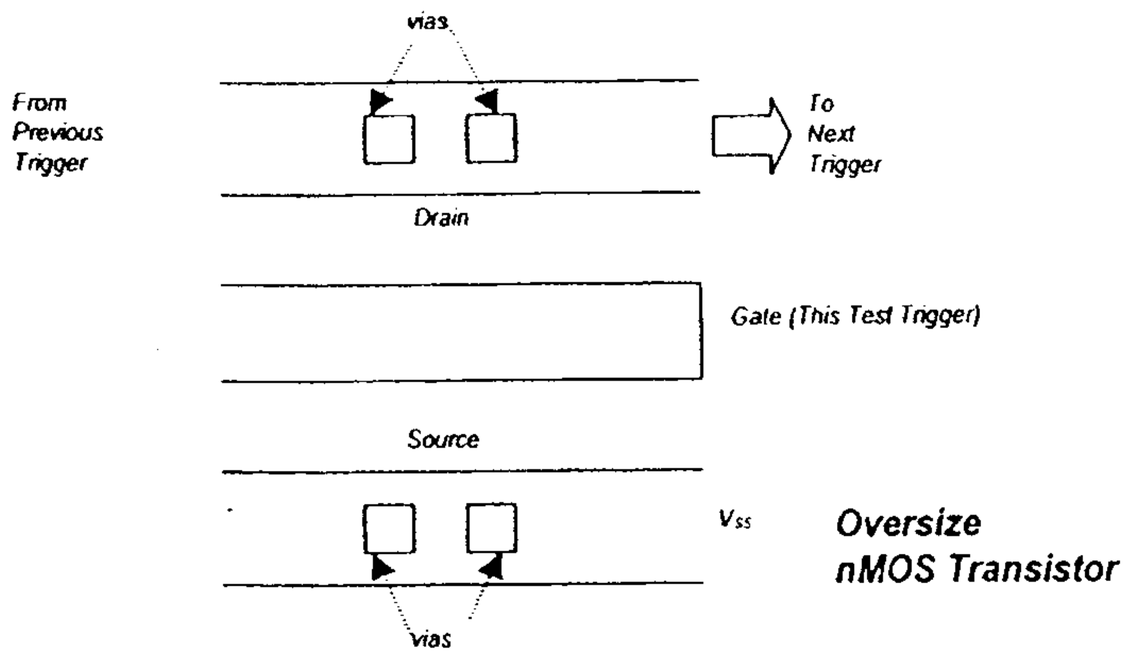
vias
From Previous Trigger
To Next Trigger
Drain
Gate (This Test Trigger)
Source
Vss
vias
Oversize nMOS Transistor

FIG. 176

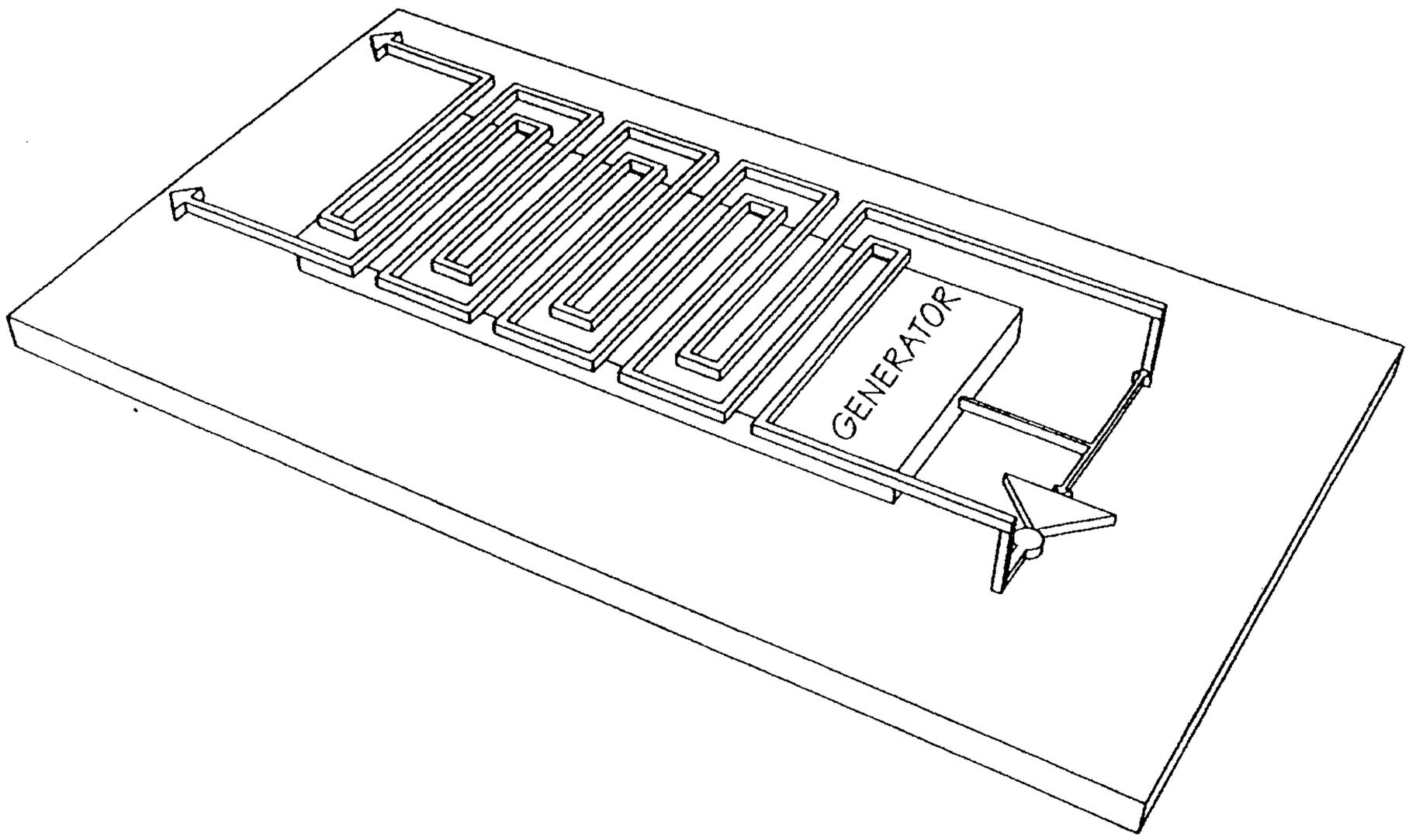

FIG. 178

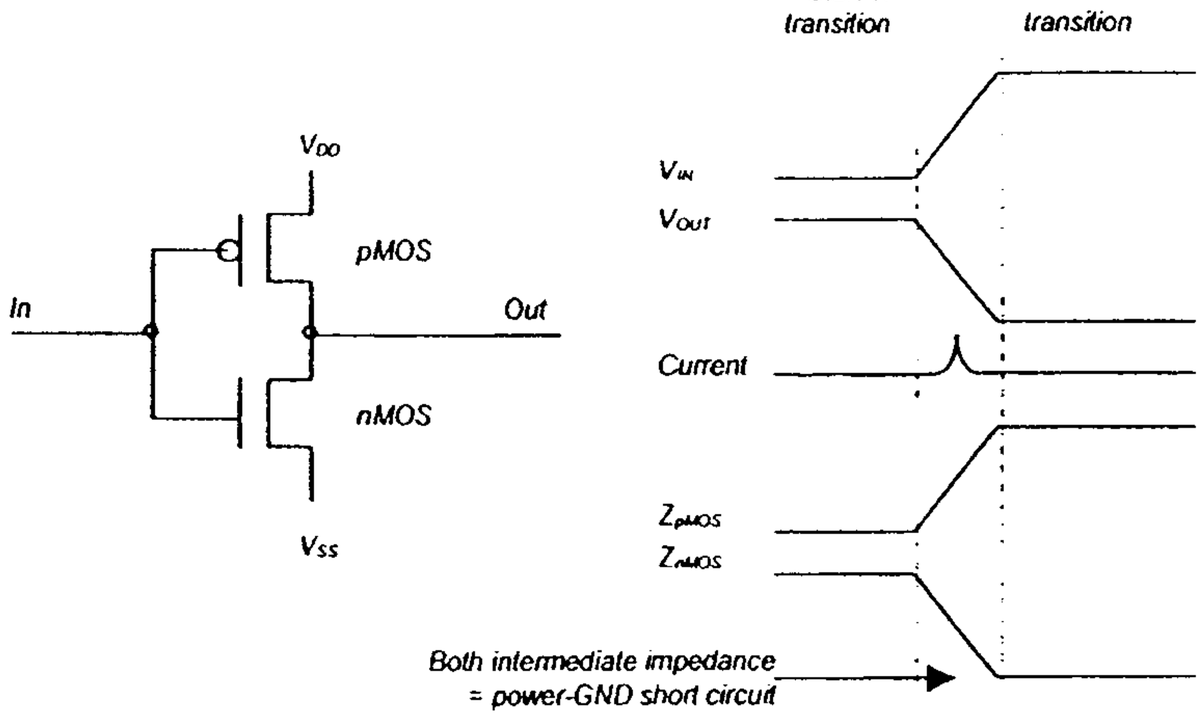

FIG. 179

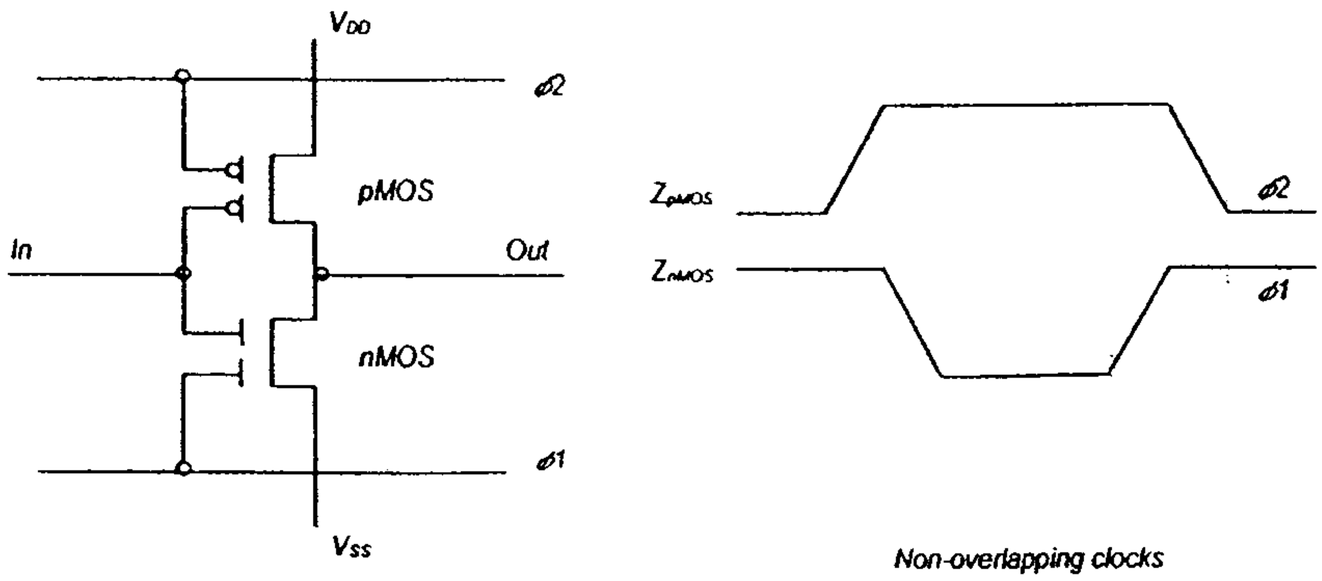

FIG. 180

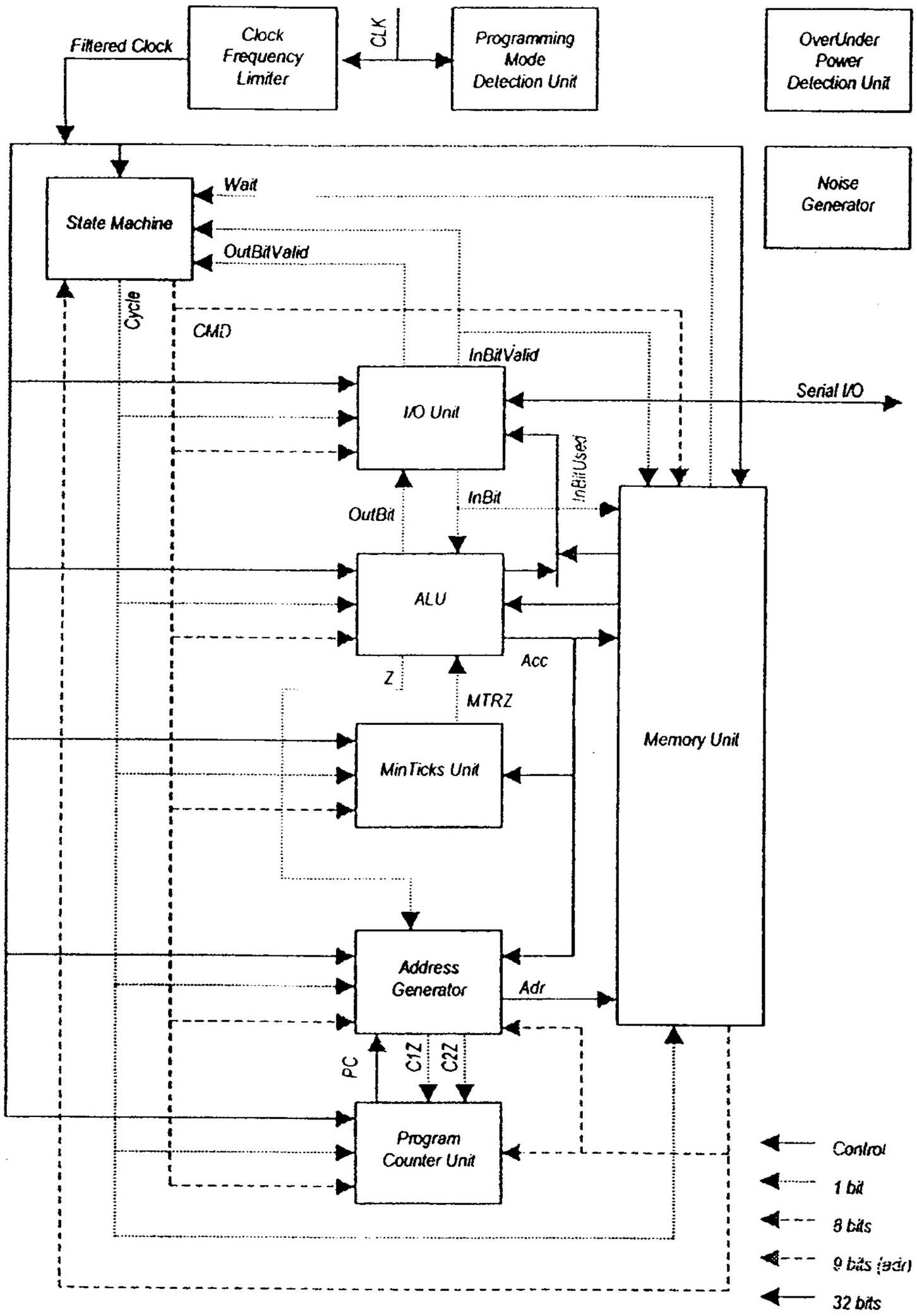
Filtered Clock
Clock Frequency Limiter
CLK
Programming Mode Detection Unit
OverUnder Power Detection Unit
Noise Generator
State Machine
Wait
OutBitValid
Cycle
CMD
InBitValid
I/O Unit
Serial I/O
InBitUsed
InBit
OutBit
ALU
Acc
Z
MTRZ
MinTicks Unit
Memory Unit
Address Generator
Adr
PC
C1Z
C2Z
Program Counter Unit
Control
1 bit
9 bits (adr)
32 bits

FIG 121

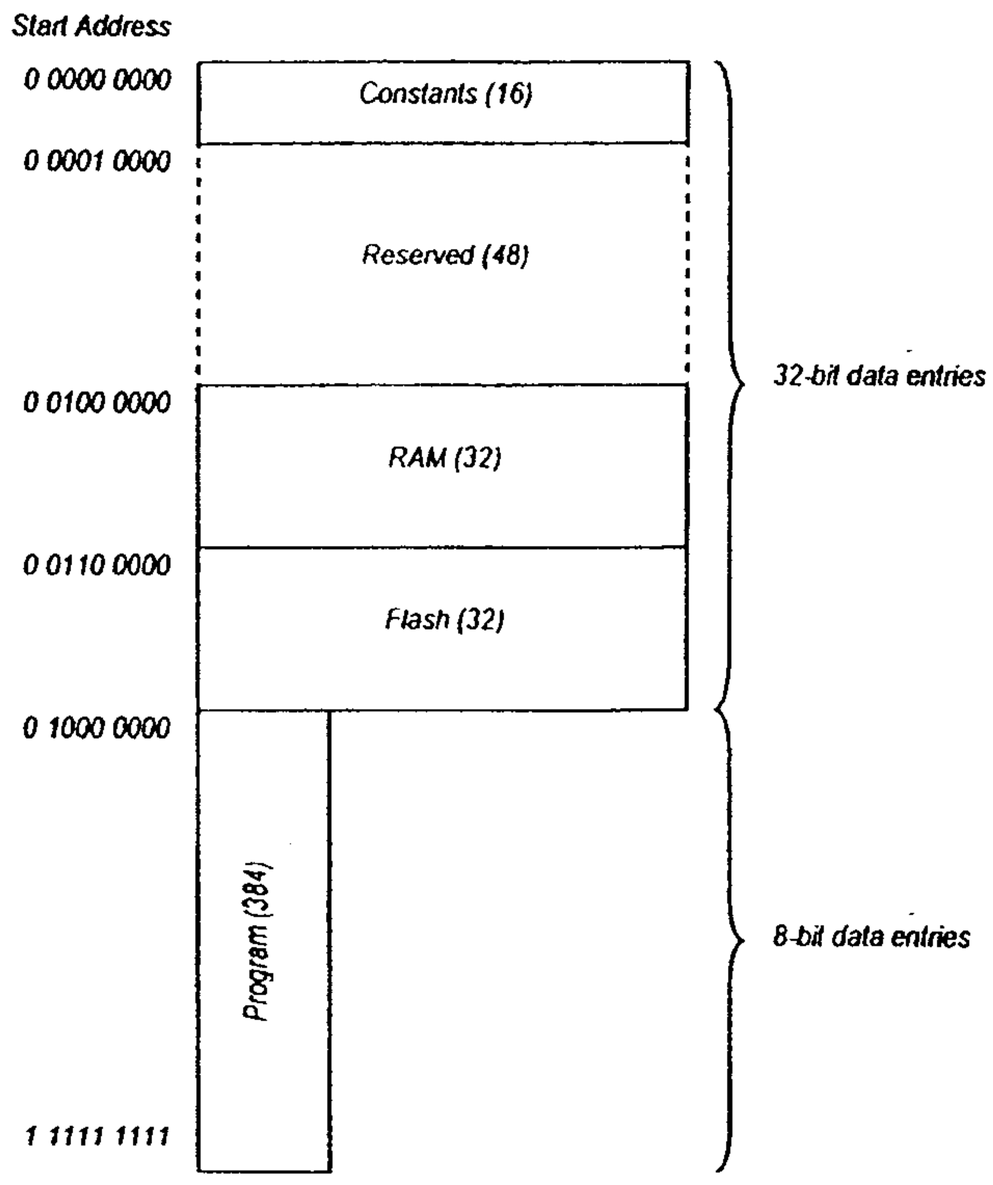
Start Address
0 0000 0000
0 0001 0000
0 0100 0000
0 0110 0000
0 1000 0000
1 1111 1111
Constants (16)
Reserved (48)
RAM (32)
Flash (32)
Program (384)
32-bit data entries
8-bit data entries

FIG. 182

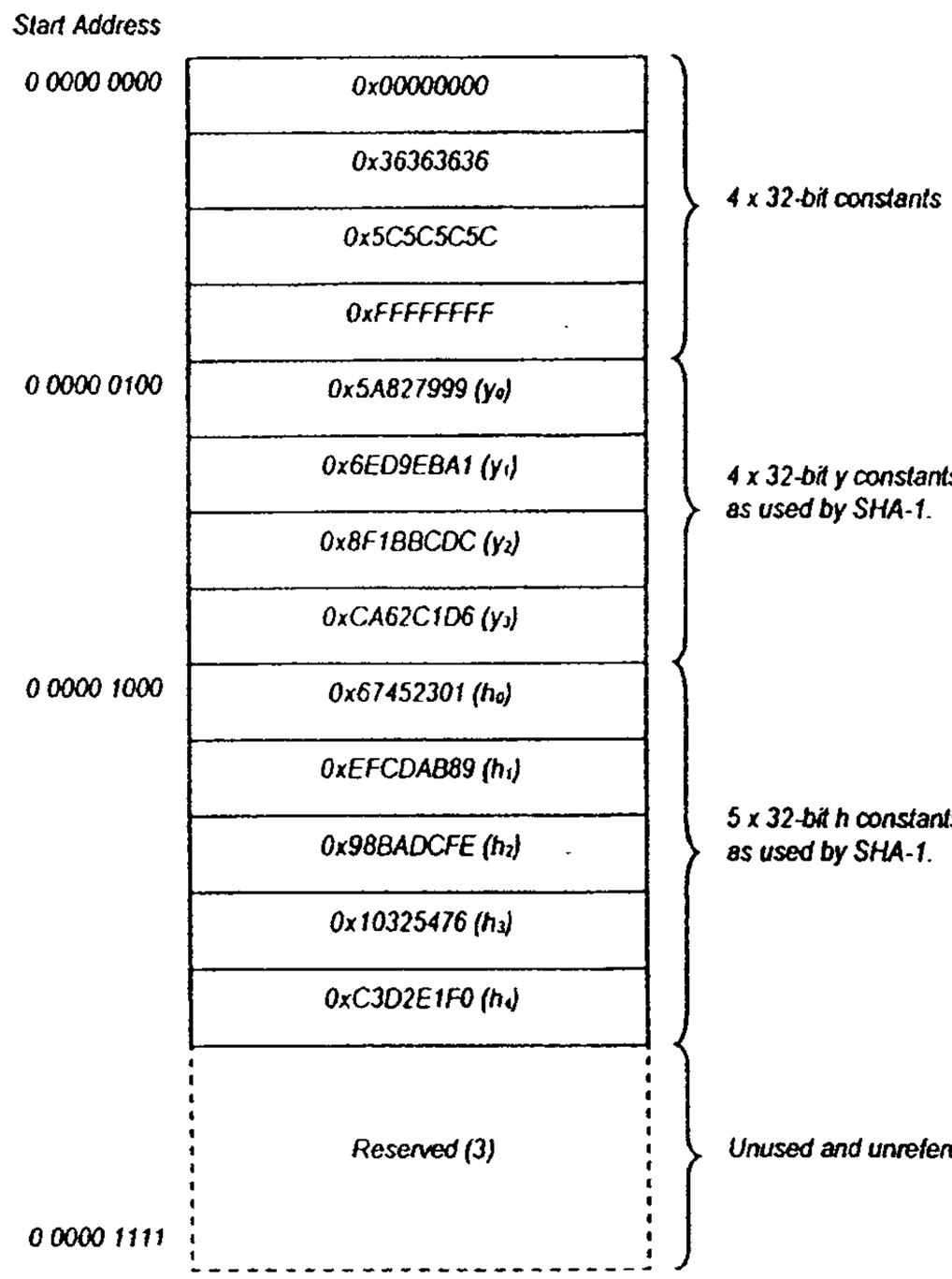
Start Address
0 0000 0000
0x00000000
0x36363636
0x5C5C5C5C
0xFFFFFFFF
0 0000 0100
0x5A827999 (y0)
0x6ED9EBA1 (y1)
0x8F1BBCDC (y2)
0xCA62C1D6 (y3)
0 0000 1000
0x67452301 (h0)
0xEFCDAB89 (h1)
0x98BADCFE (h2)
0x10325476 (h3)
0xC3D2E1F0 (h4)
Reserved (3)
0 0000 1111
4 x 32-bit constants
4 x 32-bit y constants as used by SHA-1.
5 x 32-bit h constants as used by SHA-1.
Unused and unreferenced

FIG. 183

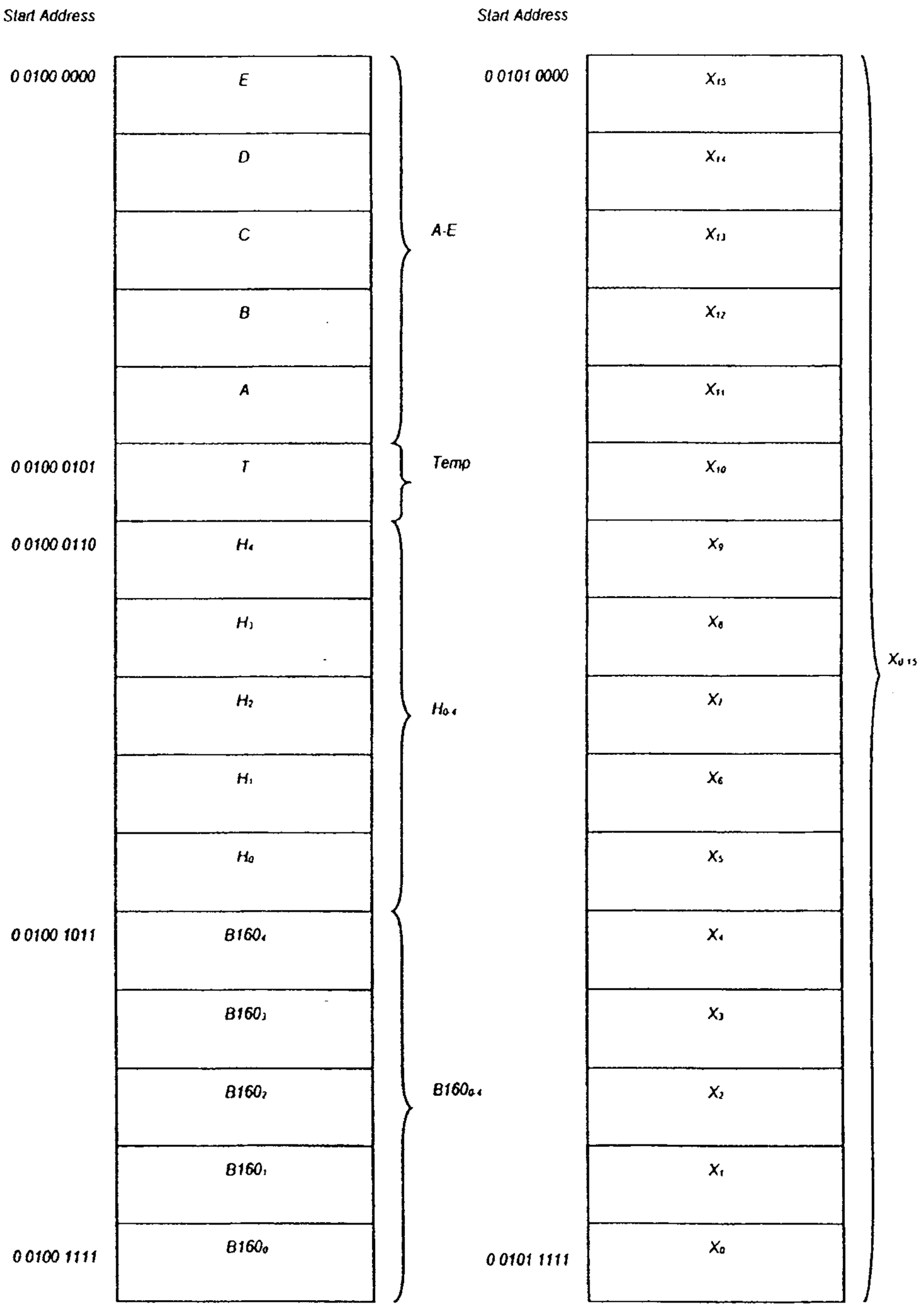
Start Address
0 0100 0000
E
D
C
B
A
A-E
0 0100 0101
T
Temp
0 0100 0110
H4
H3
H2
H1
H0
H0-4
0 0100 1011
B160-4
B160-3
B160-2
B160-1
0 0100 1111
B160-0
B160-4-4
Start Address
0 0101 0000
X15
X14
X13
X12
X11
X10
X9
X8
X7
X6
X5
X4
X3
X2
X1
0 0101 1111
X0
X0-15

FIG. 184

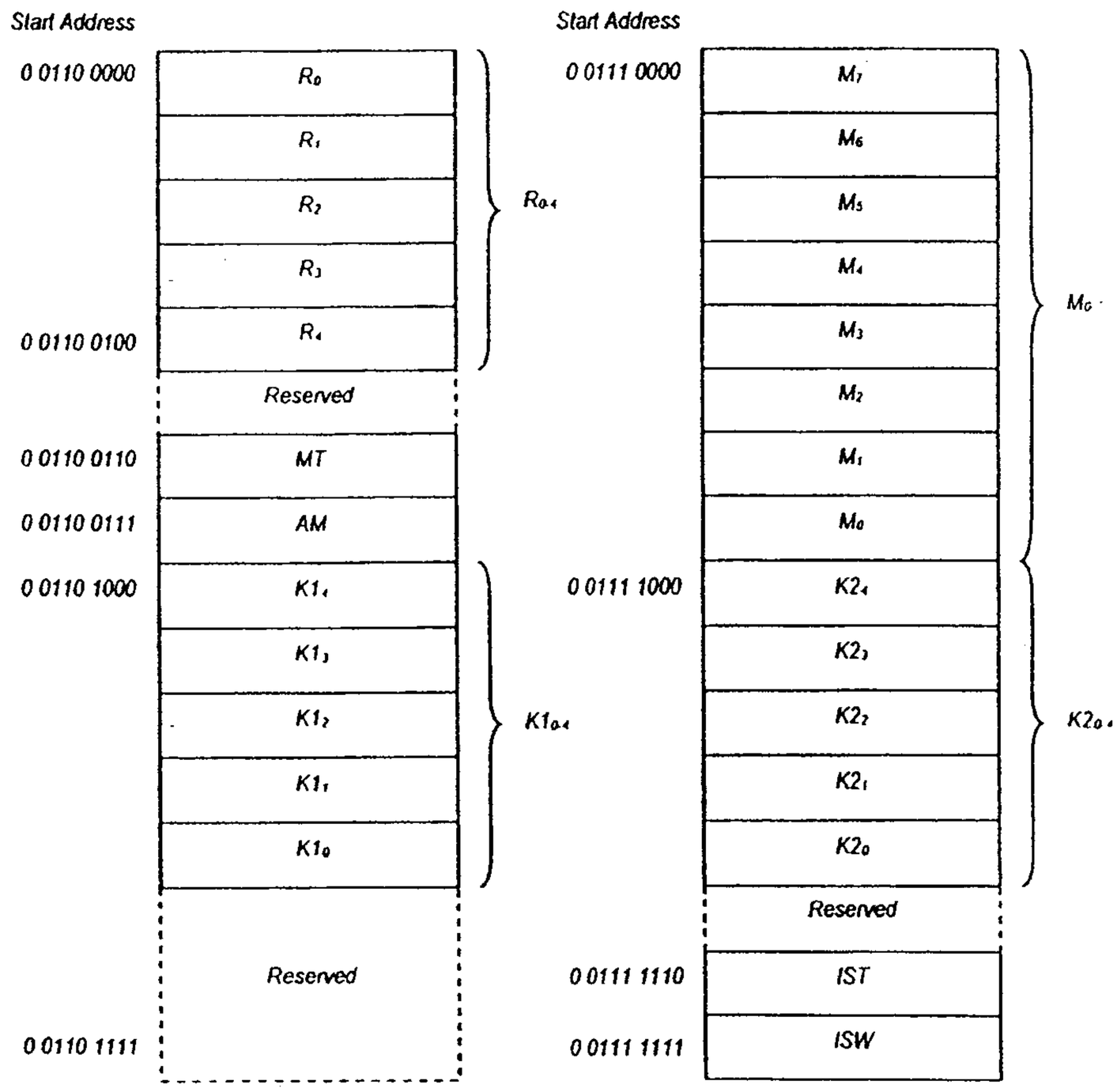
Start Address
0 0110 0000
R0
R1
R2
R3
R4
R0-4
0 0110 0100
Reserved
0 0110 0110
MT
0 0110 0111
AM
0 0110 1000
K1-4
K1
K1
K1
K1
K1-04
0 0110 1111
Reserved
Start Address
0 0111 0000
M7
M6
M5
M4
M3
M2
M1
M0
M0
0 0111 1000
K2-4
K2
K2
K2
K2
K2-04
Reserved
0 0111 1110
IST
0 0111 1111
ISW

FIG. 185

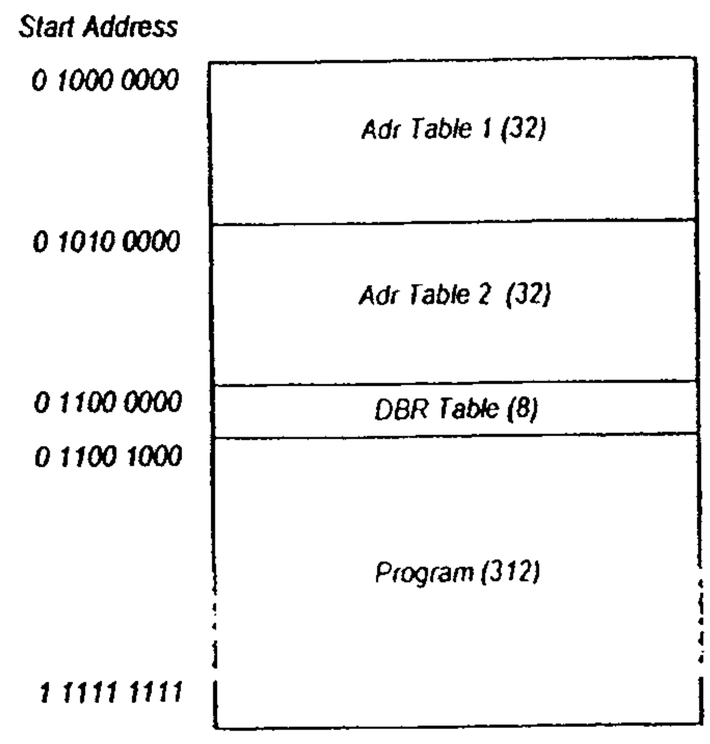
Start Address
0 1000 0000
Adr Table 1 (32)
0 1010 0000
Adr Table 2 (32)
0 1100 0000
DBR Table (8)
0 1100 1000
Program (312)
1 1111 1111

FIG. 186

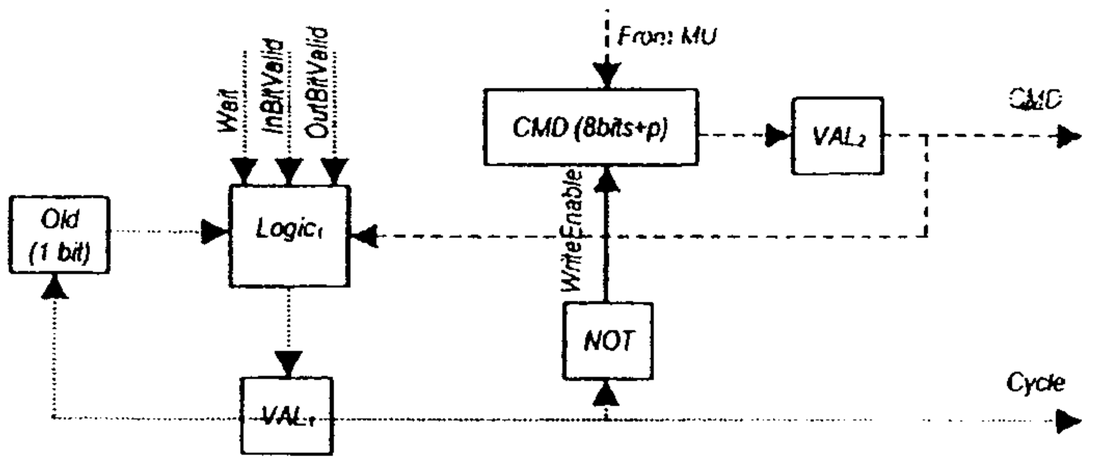

FIG. 187

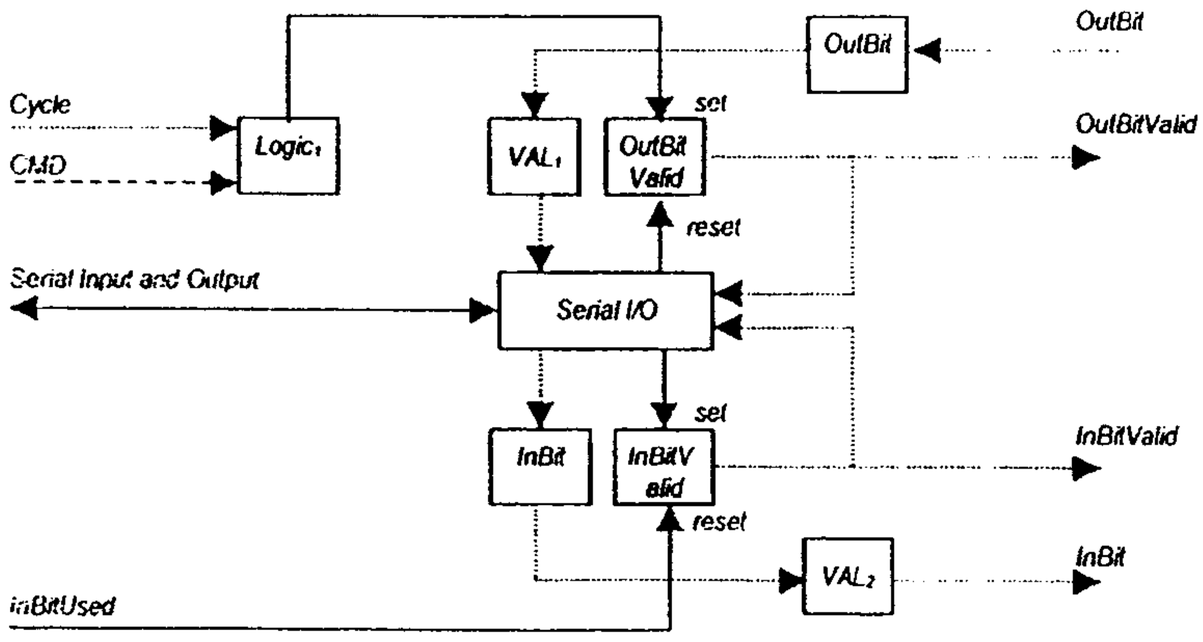

FIG. 188

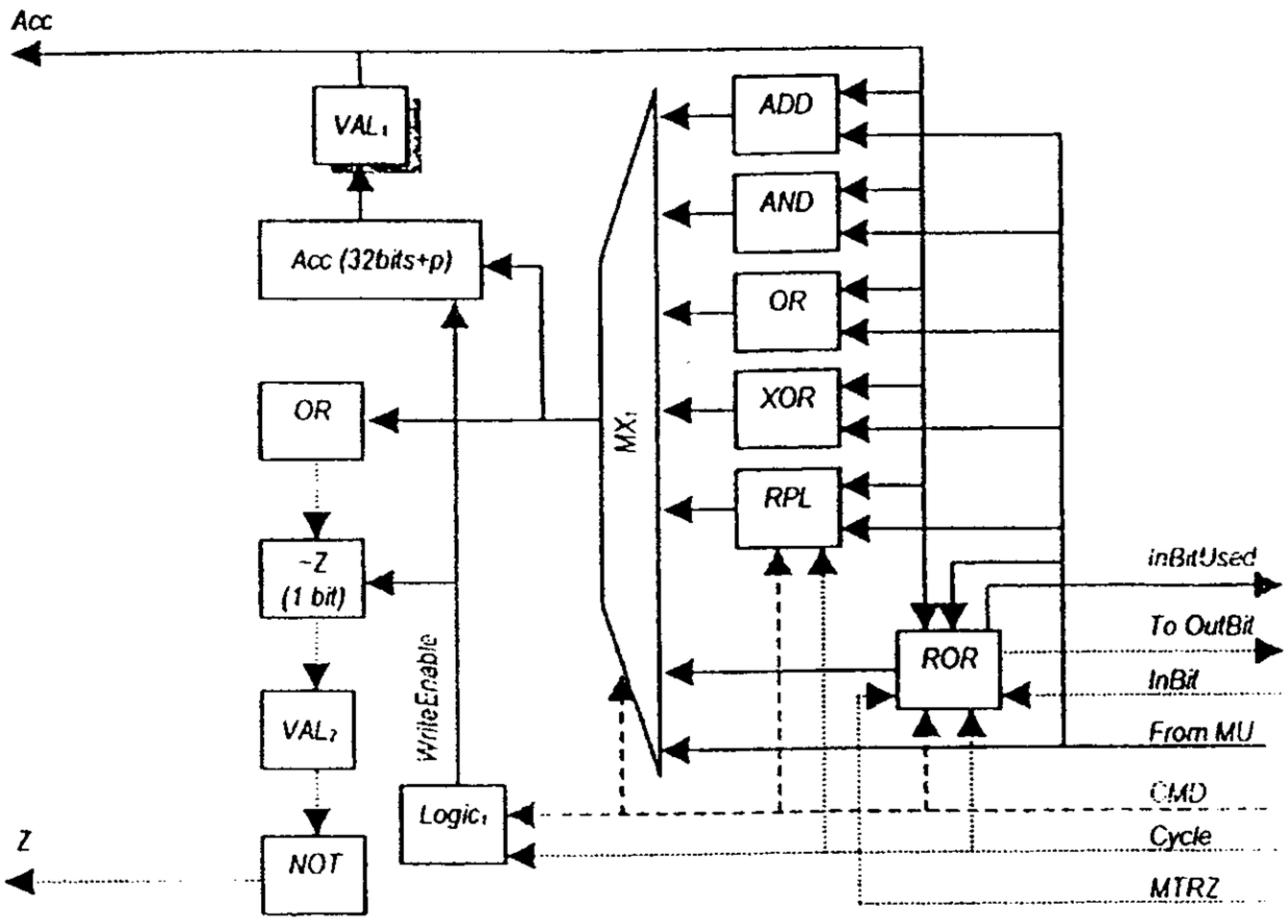
Acc
VAL1
Acc (32bits+p)
OR
-Z
(1 bit)
VAL2
NOT
Z
WriteEnable
Logic1
MX1
ADD
AND
OR
XOR
RPL
ROR
inBitUsed
To OutBit
InBit
From MU
CMD
Cycle
MTRZ

FIG. 189

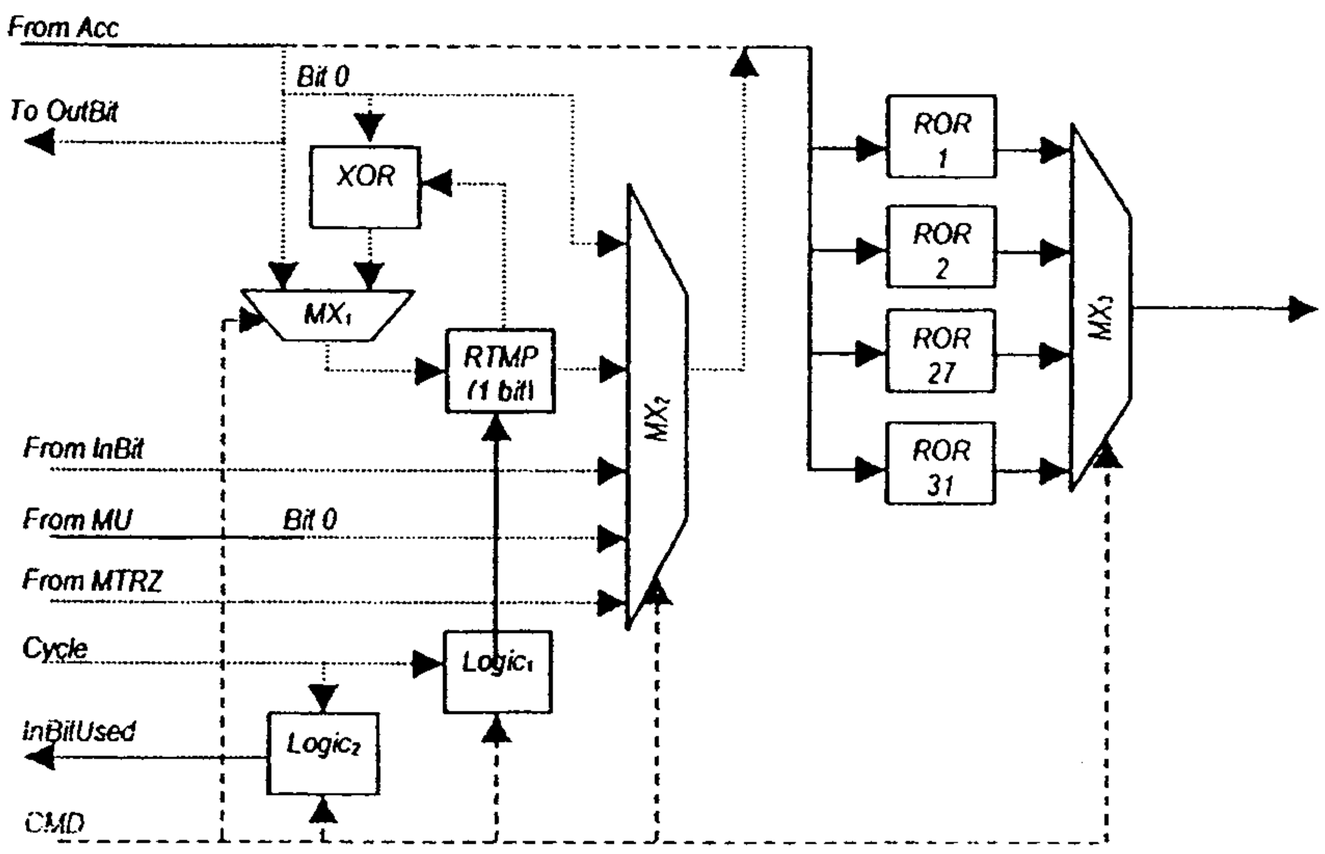
From Acc
Bit 0
To OutBit
XOR
MX1
RTMP
(1 bit)
MX2
From InBit
From MU
Bit 0
From MTRZ
Cycle
Logic1
InBitUsed
Logic2
CMD
ROR
1
ROR
2
ROR
27
ROR
31
MX3

FIG. 190

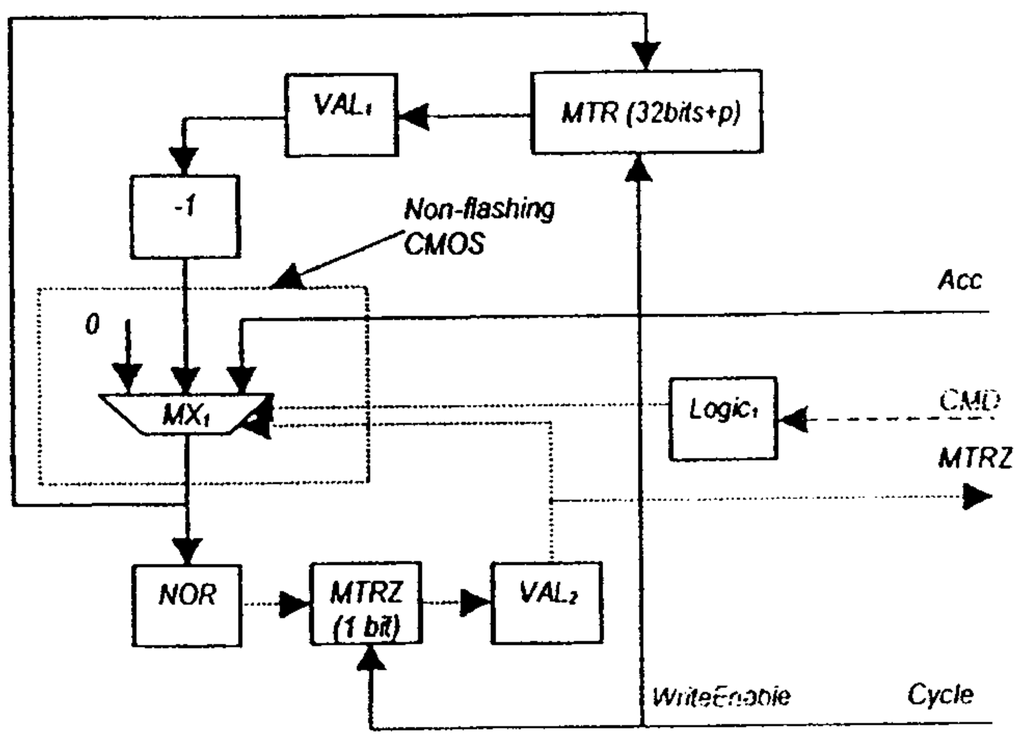
VAL1
MTR (32bits+p)
-1
Non-flashing CMOS
Acc
0
MX1
Logic1
CMD
MTRZ
NOR
MTRZ (1 bit)
VAL2
WriteEnable
Cycle

FIG. 191

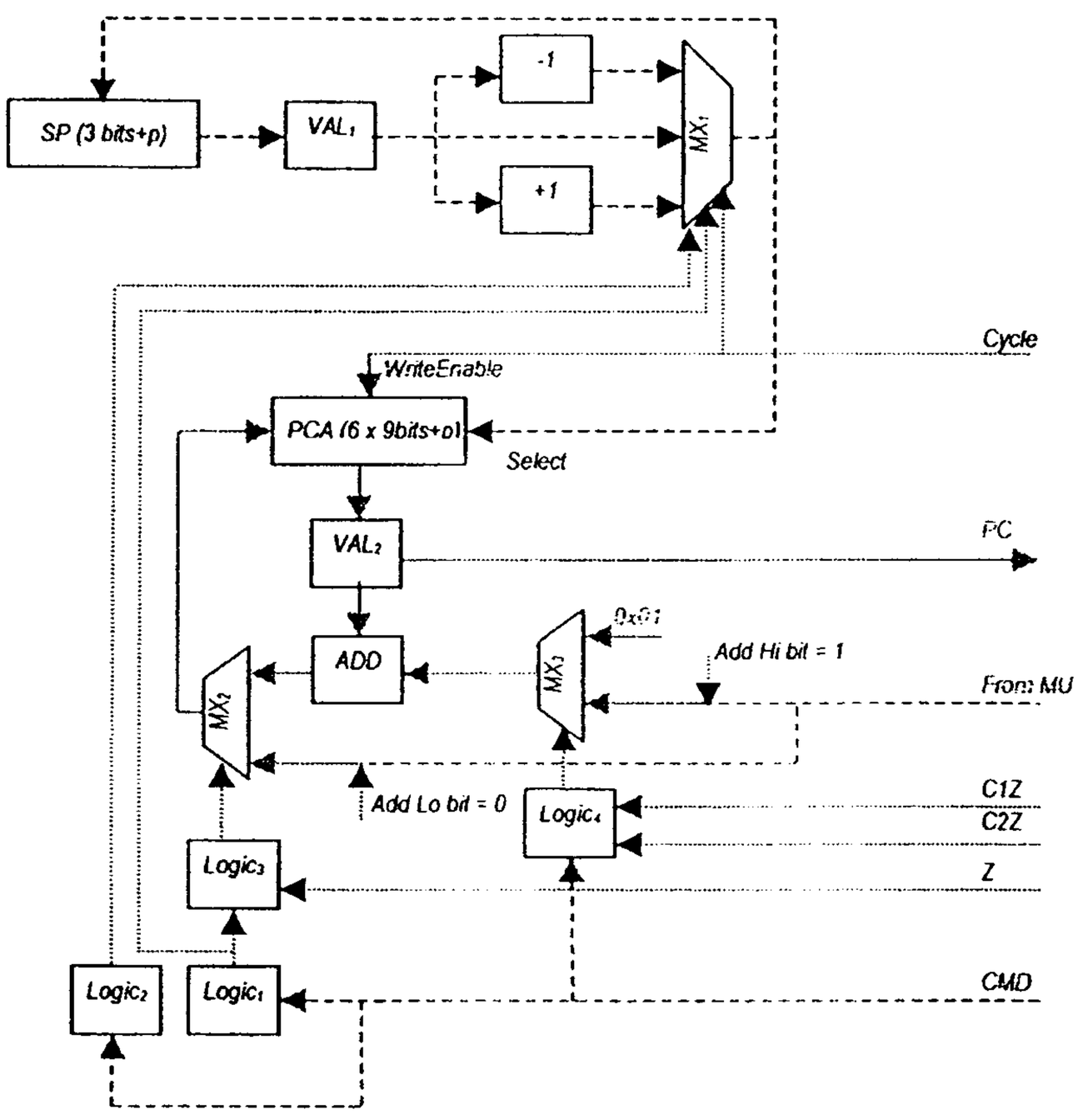
SP (3 bits+p)
VAL1
-1
+1
MX1
Cycle
WriteEnable
PCA (6 x 9bits+p)
Select
VAL2
PC
ADD
0x01
MX3
Add Hi bit = 1
From MU
MX2
Add Lo bit = 0
Logic4
C1Z
C2Z
Z
Logic3
Logic2
Logic1
CMD

FIG. 192

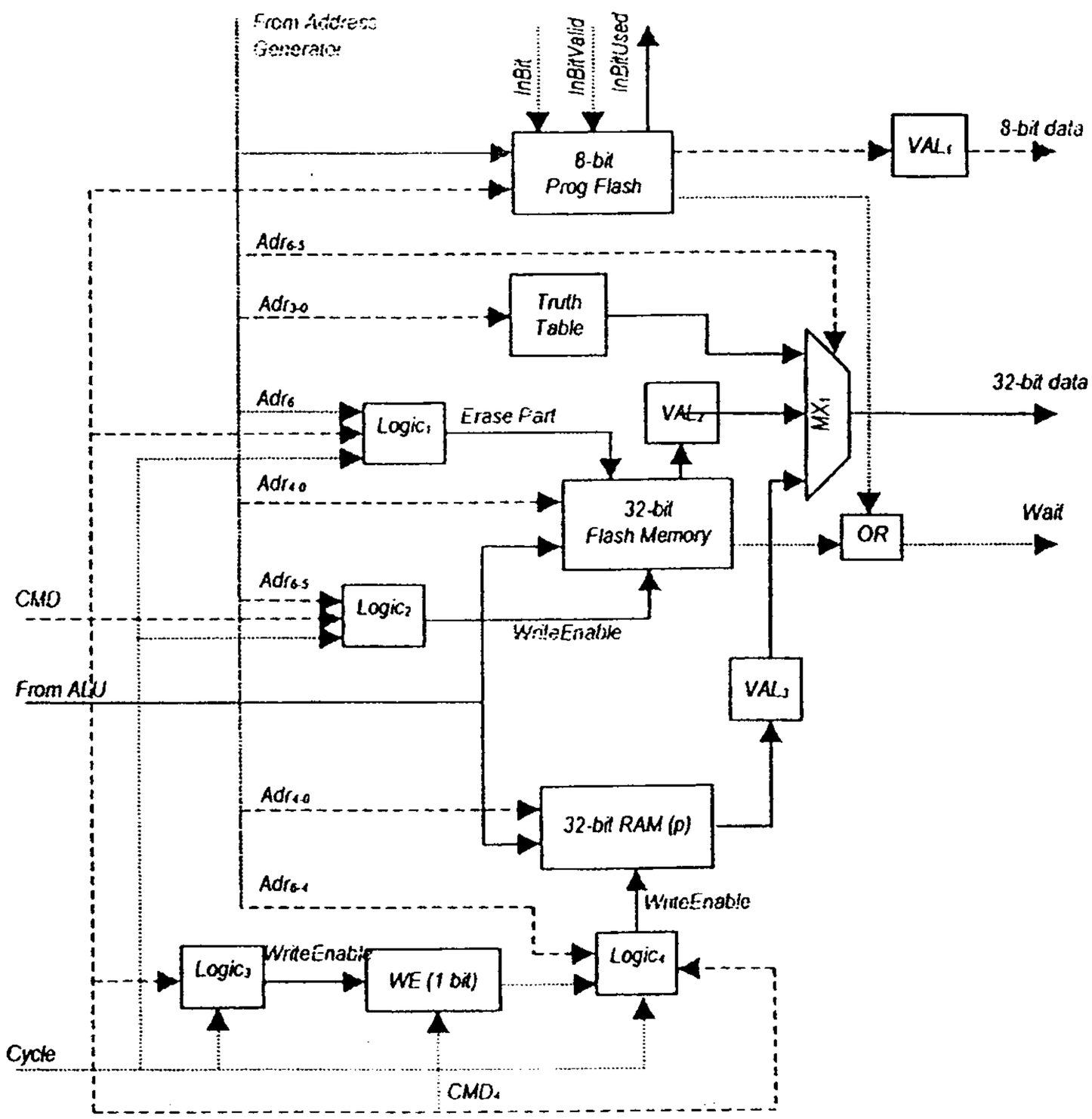
From Address Generator
InBit
InBitValid
InBitUsed
8-bit Prog Flash
VAL1
8-bit data
Adr6-5
Adr3-0
Truth Table
Adr6
Logic1
Erase Part
VAL2
MX1
32-bit data
Adr4-0
32-bit Flash Memory
OR
Wait
Adr6-5
CMD
Logic2
WriteEnable
From ALU
VAL3
Adr4-0
32-bit RAM (p)
Adr6-4
WriteEnable
Logic3
WriteEnable
WE (1 bit)
Logic4
Cycle
CMD4

FIG. 193

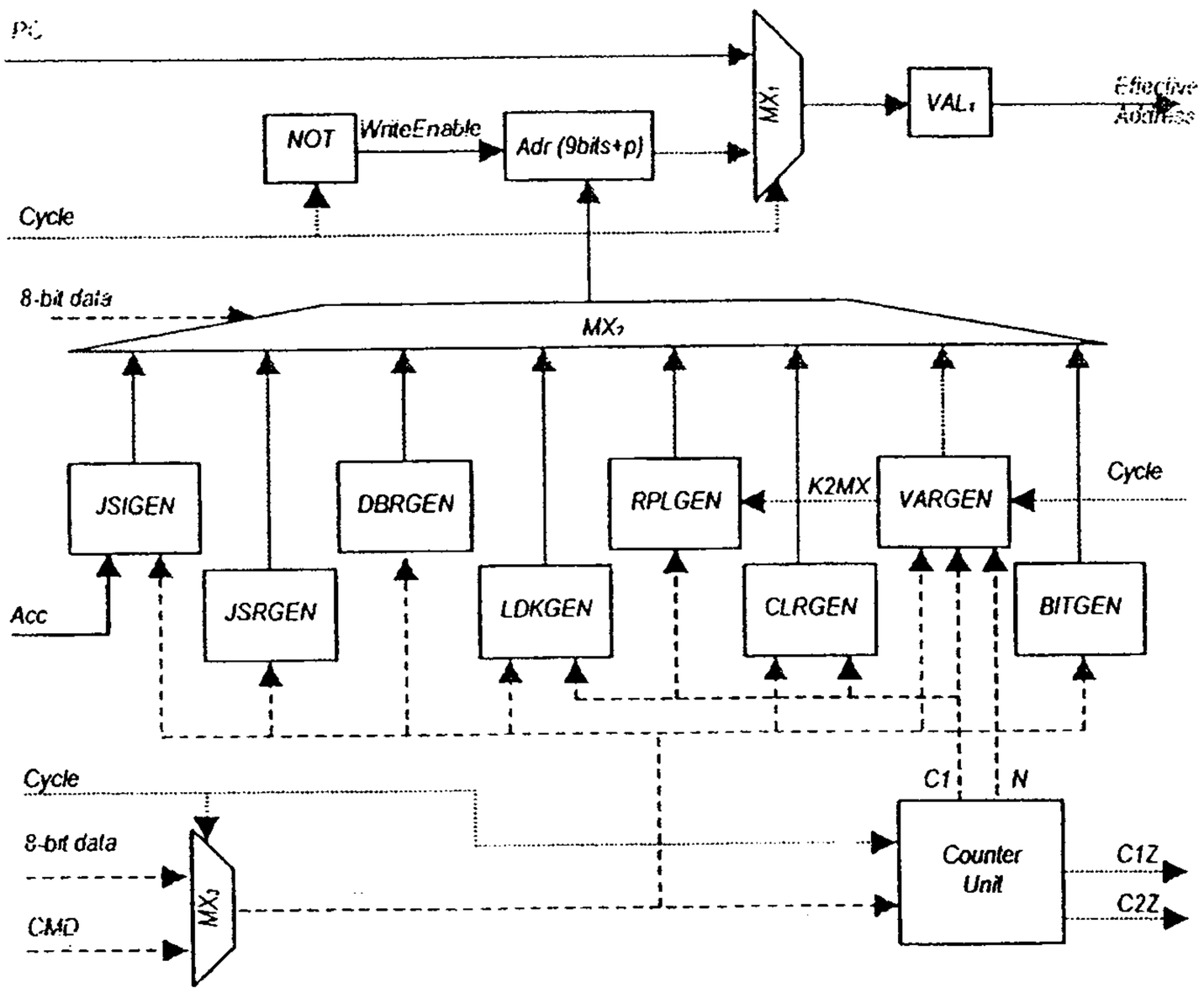
PC
NOT
WriteEnable
Adr (9bits+p)
MX1
VAL1
Effective Address
Cycle
8-bit data
MX2
JSIGEN
DBRGEN
RPLGEN
K2MX
VARGEN
Cycle
Acc
JSRGEN
LDKGEN
CLRGEN
BITGEN
Cycle
C1
N
8-bit data
CMD
MX3
Counter Unit
C1Z
C2Z

FIG. 194

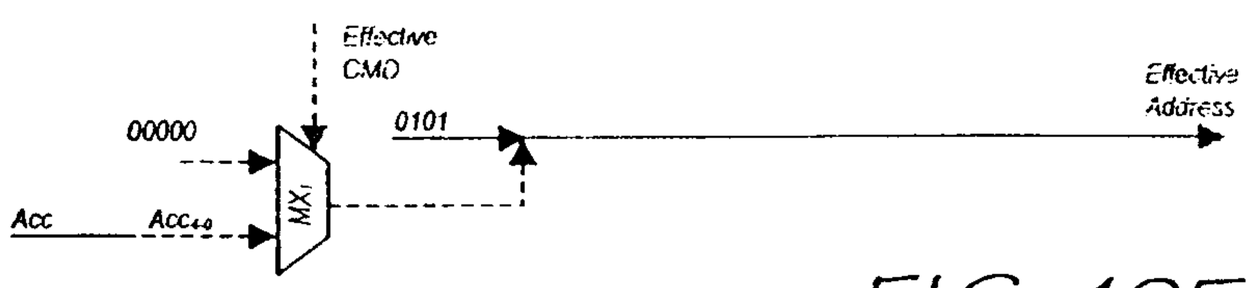

FIG. 195

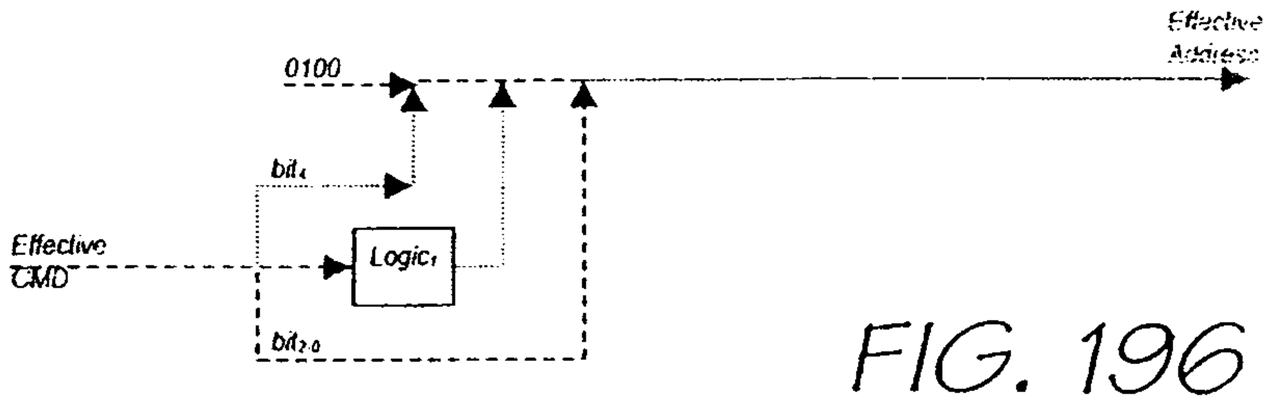

FIG. 196

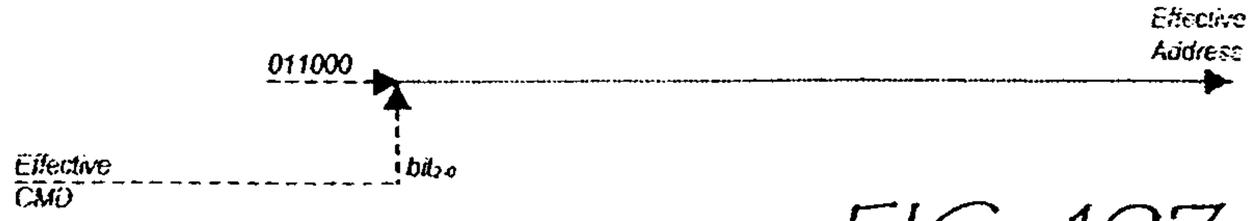

FIG. 197

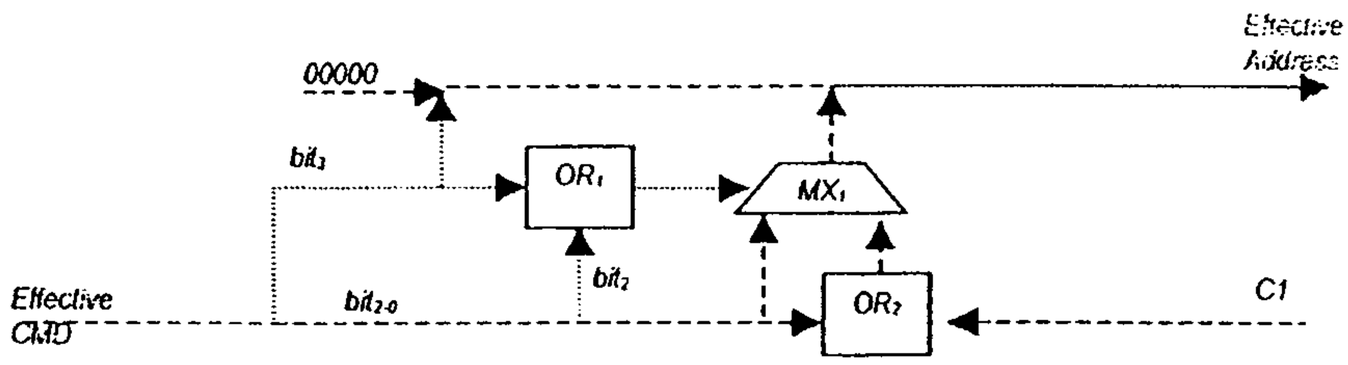

FIG. 198

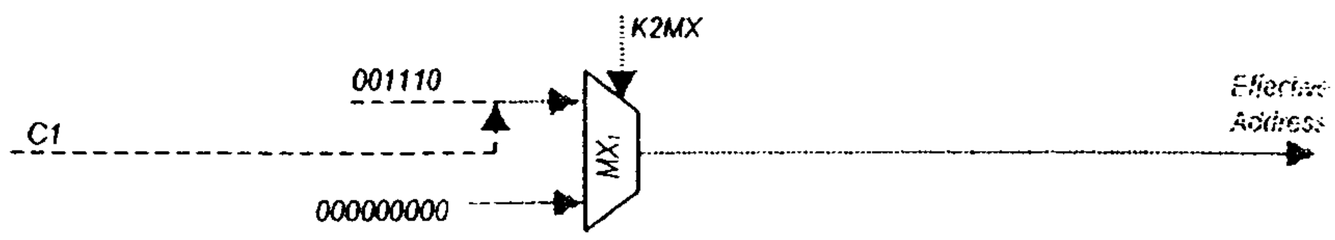

FIG. 199

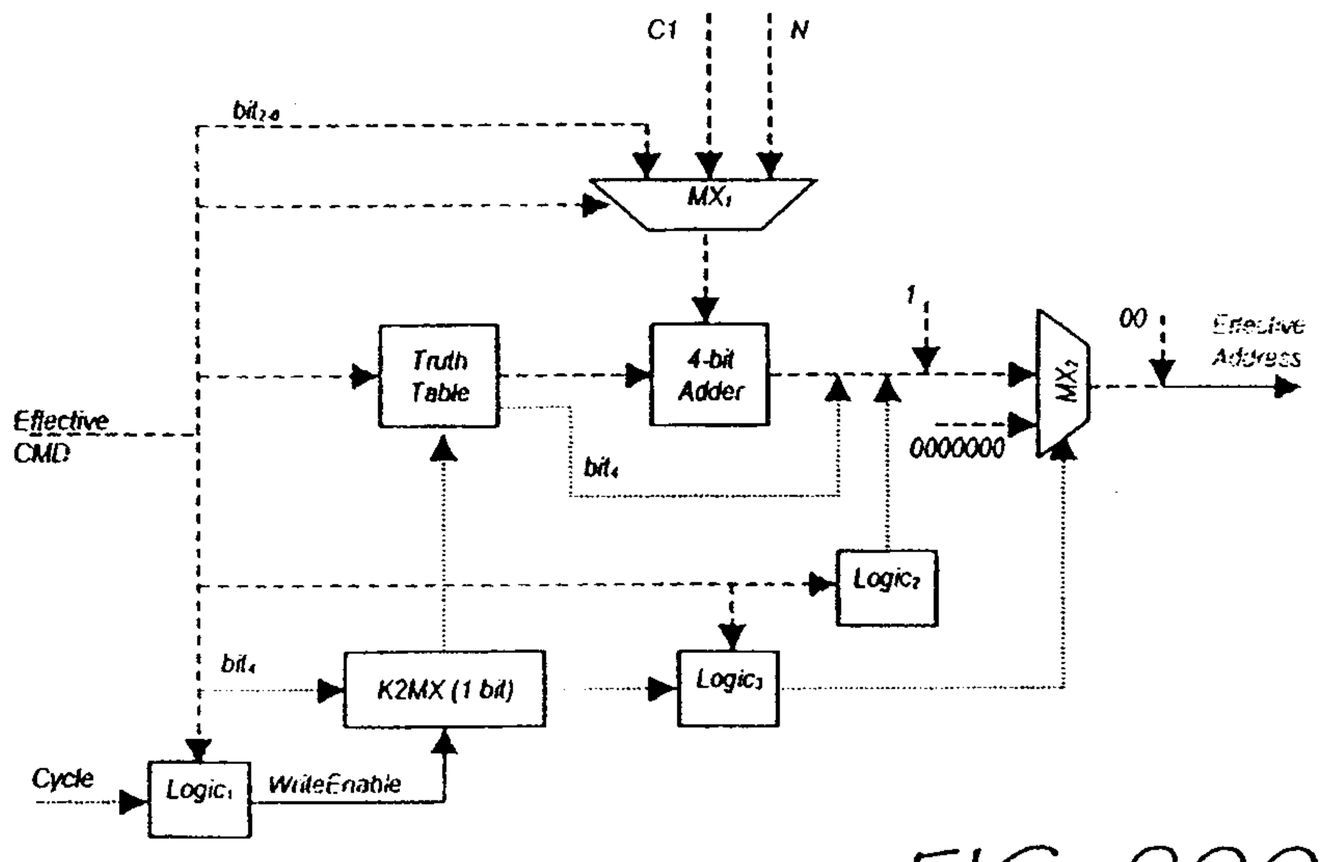

FIG. 200

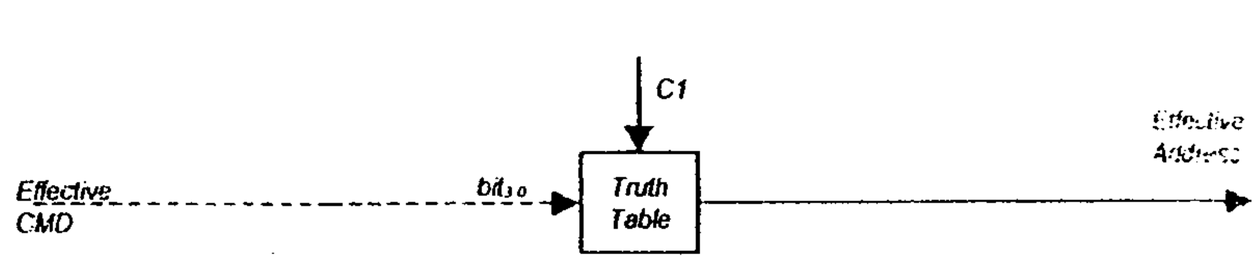

FIG. 201

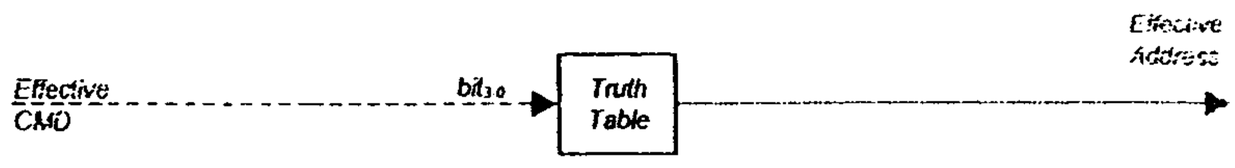

FIG. 202

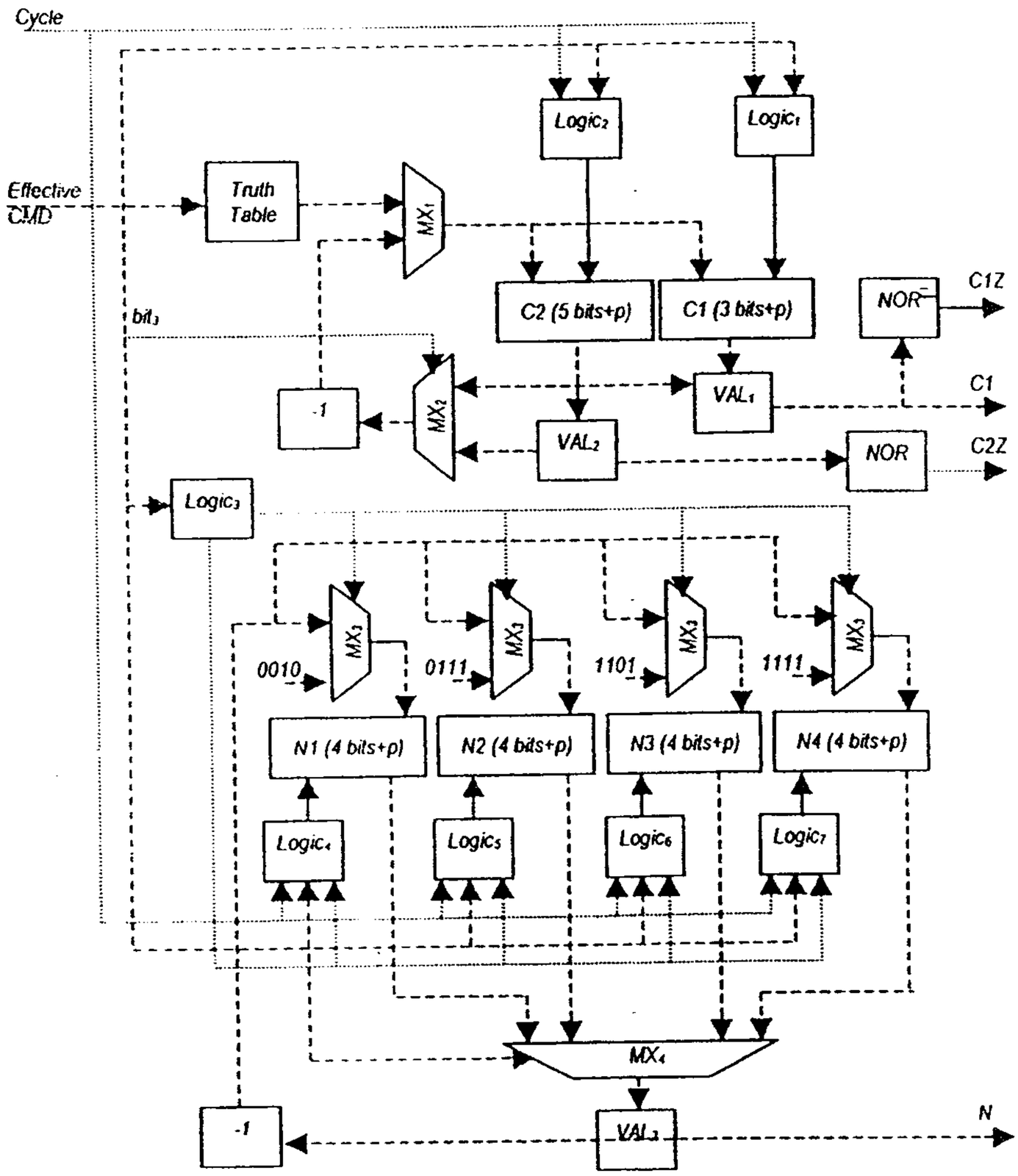
Cycle
Effective CMD
Truth Table
MX1
Logic2
Logic1
C2 (5 bits+p)
C1 (3 bits+p)
NOR
C1Z
bit3
-1
MX2
VAL1
C1
VAL2
NOR
C2Z
Logic3
MX3
0010
0111
1101
1111
N1 (4 bits+p)
N2 (4 bits+p)
N3 (4 bits+p)
N4 (4 bits+p)
Logic4
Logic5
Logic6
Logic7
MX4
-1
VAL3
N

FIG. 203

705

Data Type	Bits
Factory code	16
Batch number	32
Serial number	48
Manufacturing date	16
Media length	24
Media type	8
Preprinted media length	16
Cyan ink viscosity	8
Magenta ink viscosity	8
Yellow ink viscosity	8
Cyan drop volume	8
Magenta drop volume	8
Yellow drop volume	8
Cyan ink color	24
Magenta ink color	24
Yellow ink color	24
Remaining-media length indicator	16
Authentication key	128
Copyrightable bit pattern	512
Reserved for camera use	88
Total	**1024**

728

FIG. 204

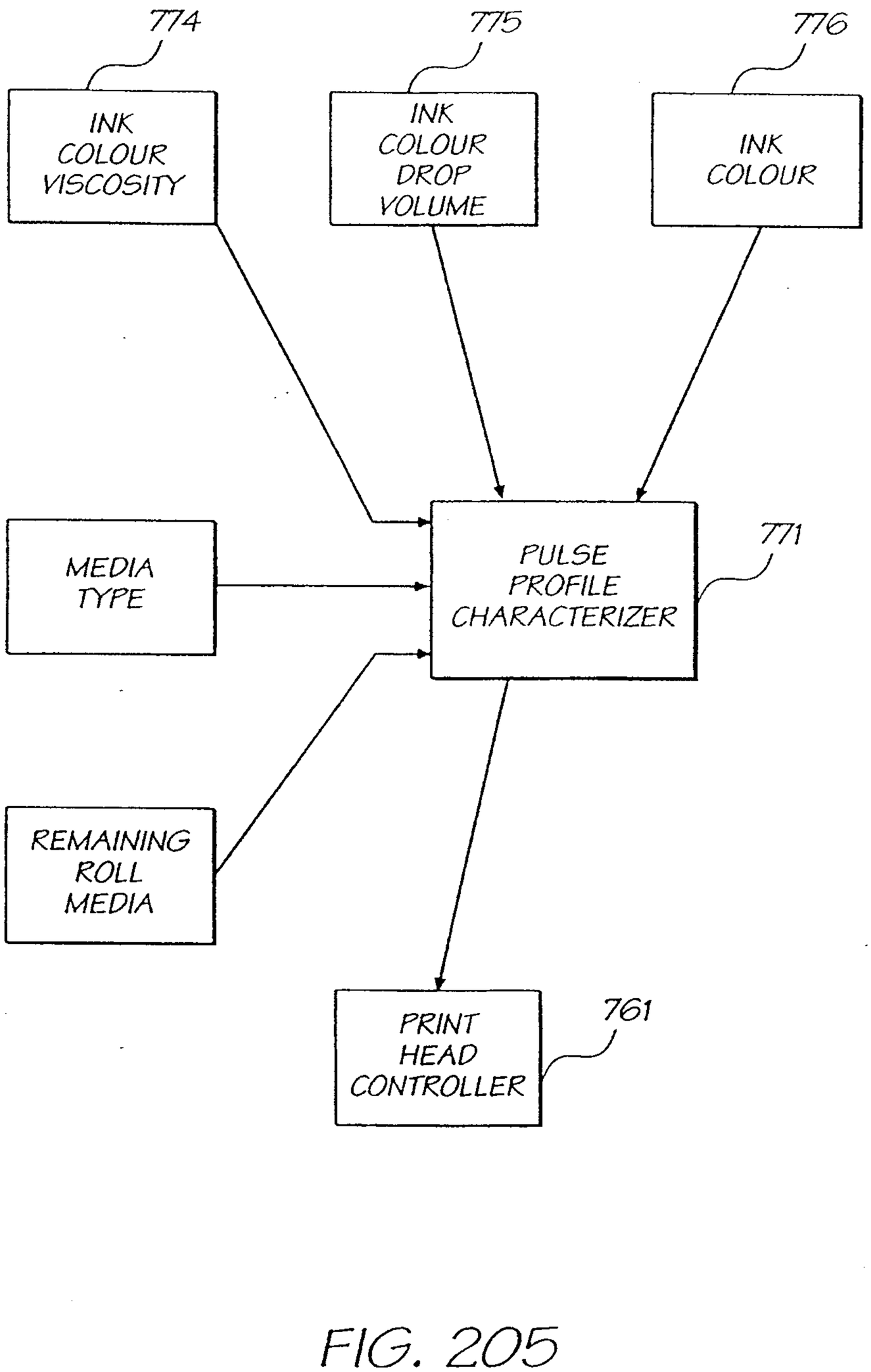
774
775
776
INK COLOUR VISCOSITY
INK COLOUR DROP VOLUME
INK COLOUR
MEDIA TYPE
PULSE PROFILE CHARACTERIZER
771
REMAINING ROLL MEDIA
PRINT HEAD CONTROLLER
761

FIG. 205

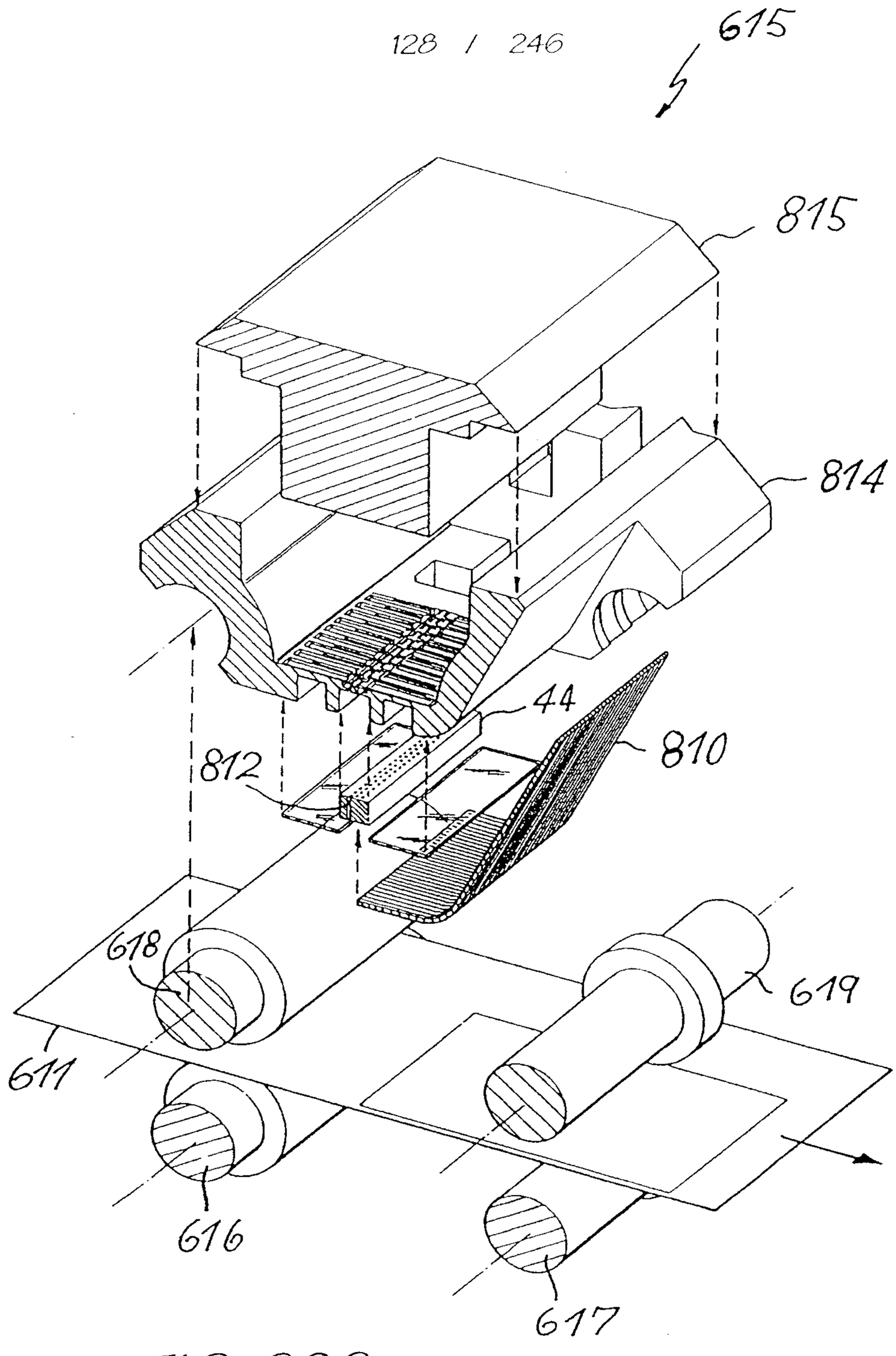

FIG 20G

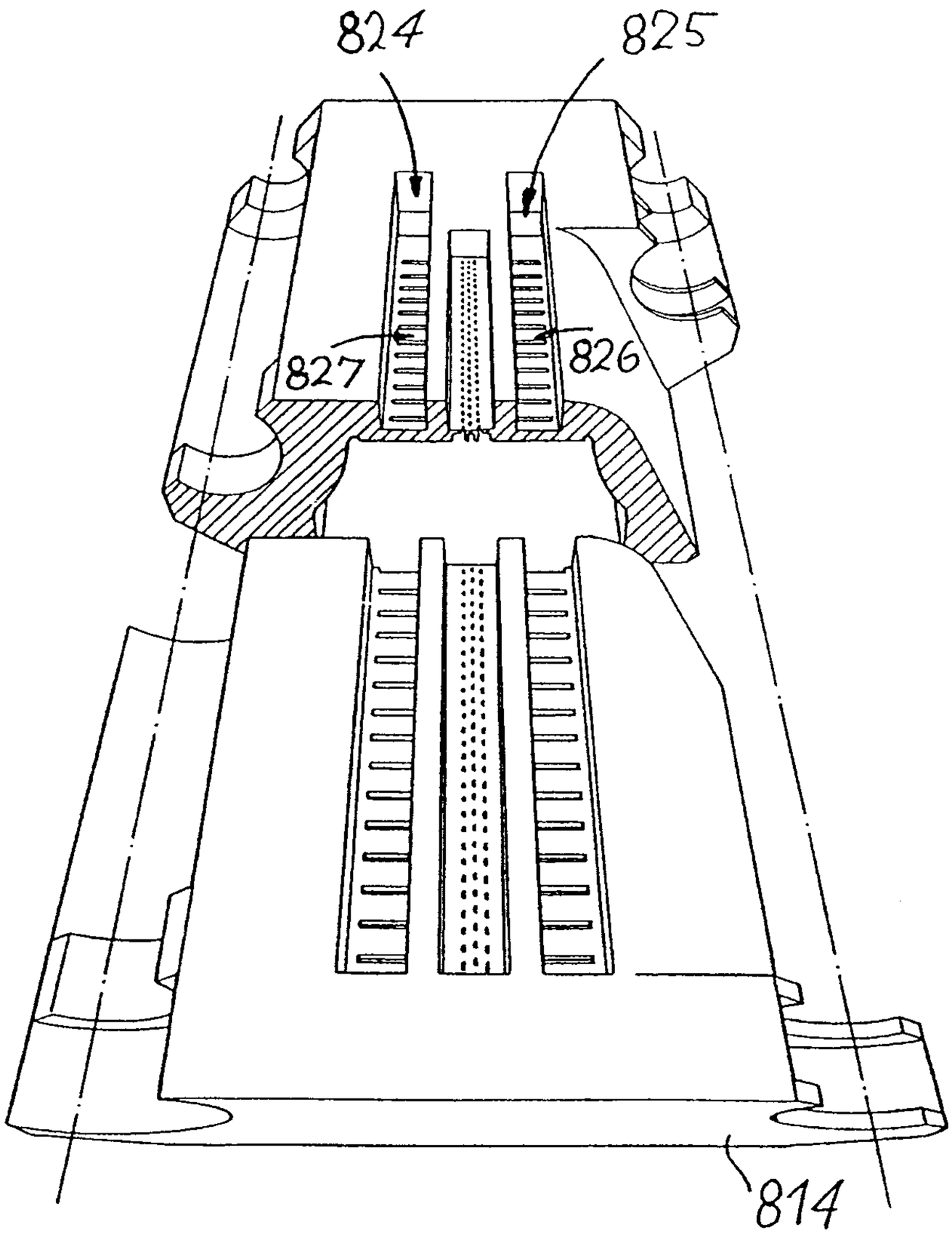

FIG. 207

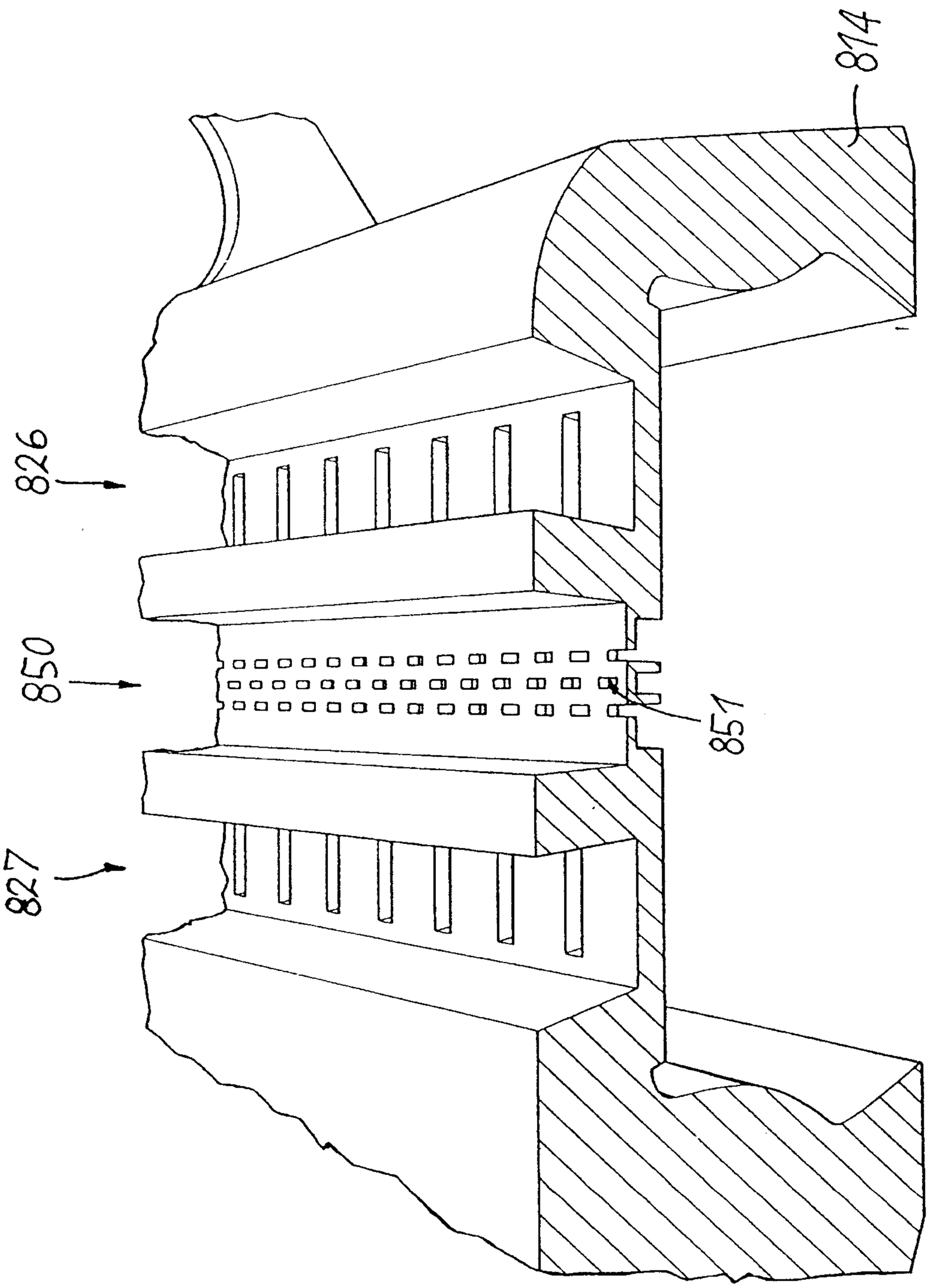

FIG. 208

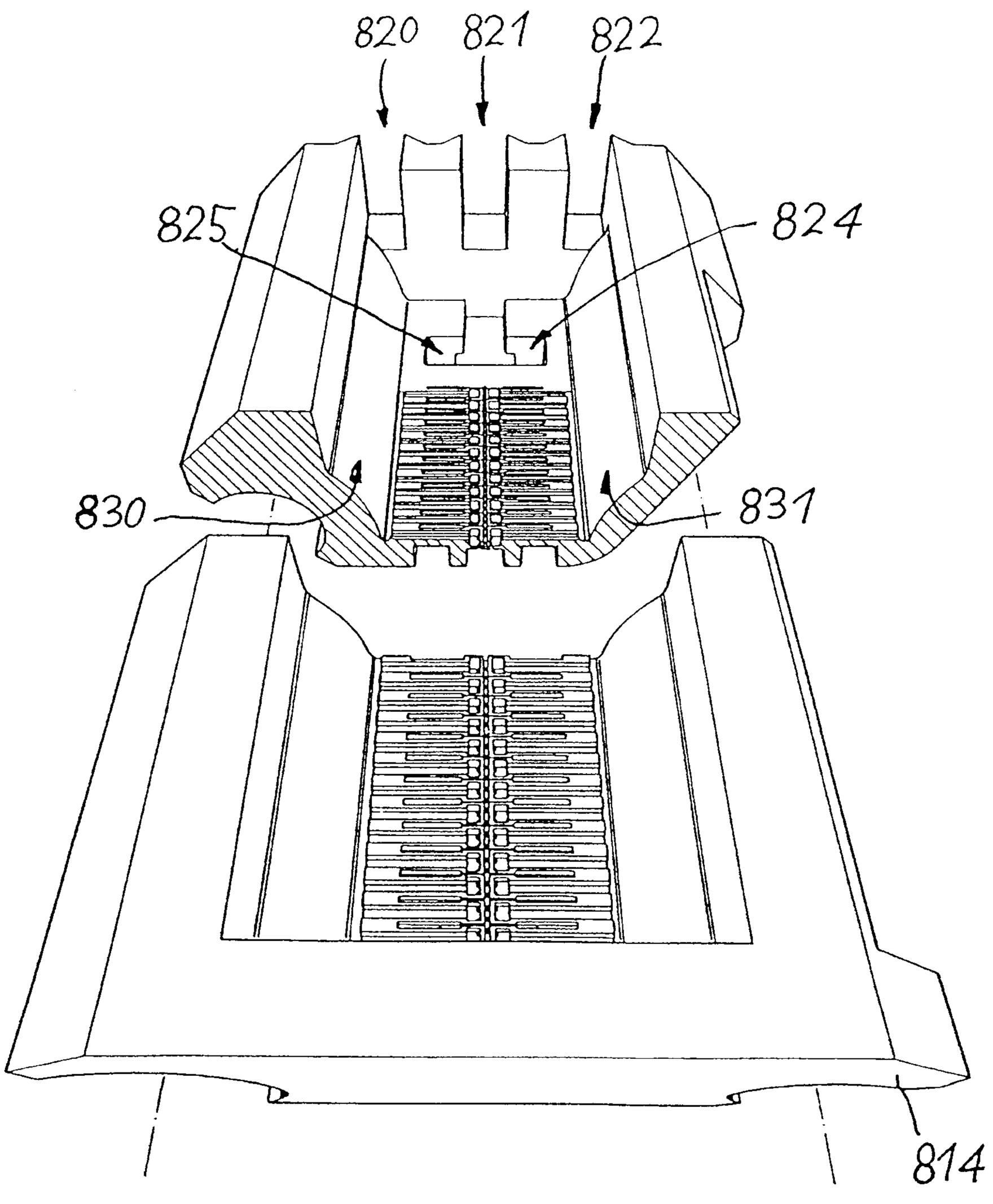

FIG. 209

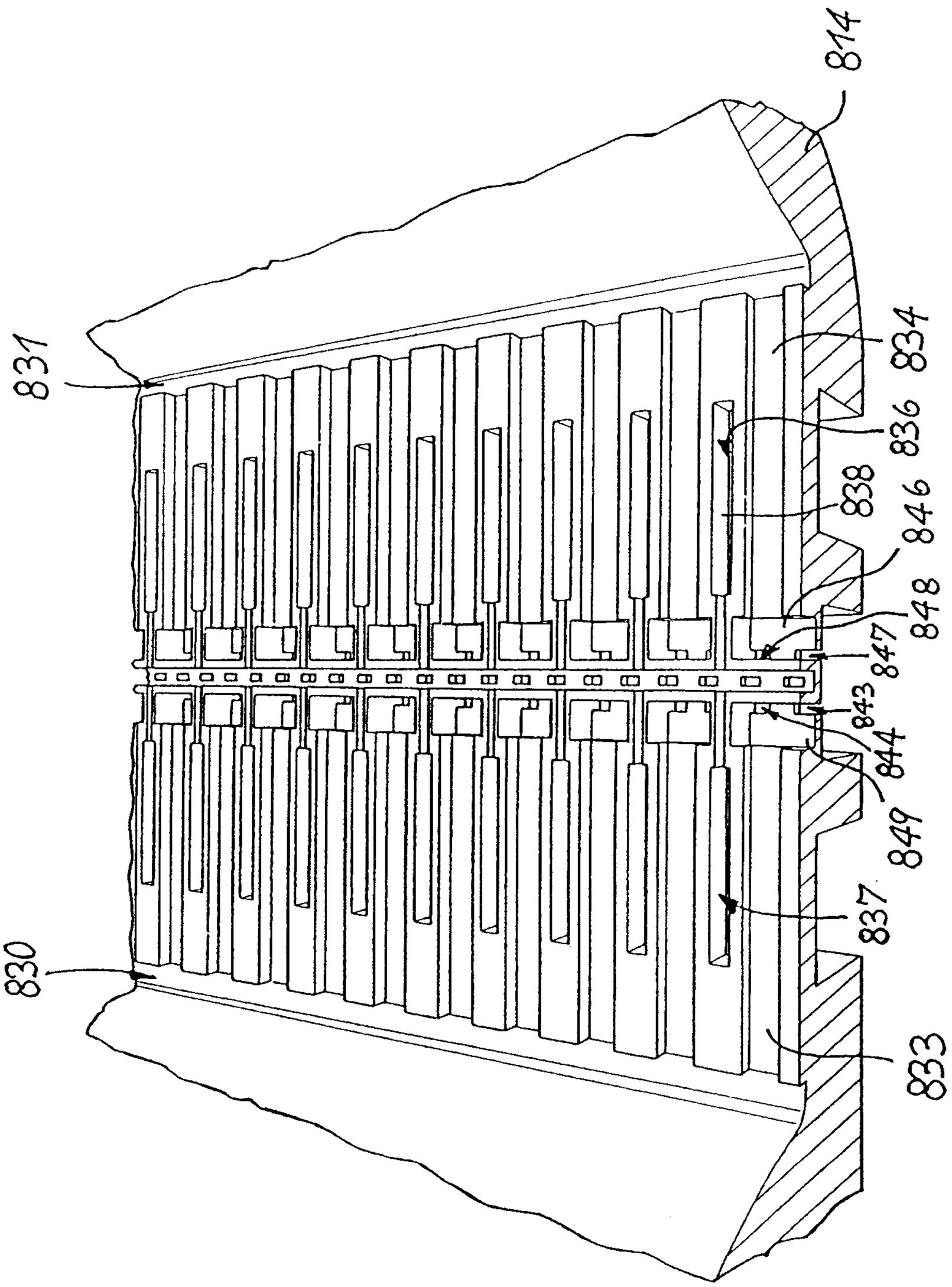

FIG. 210

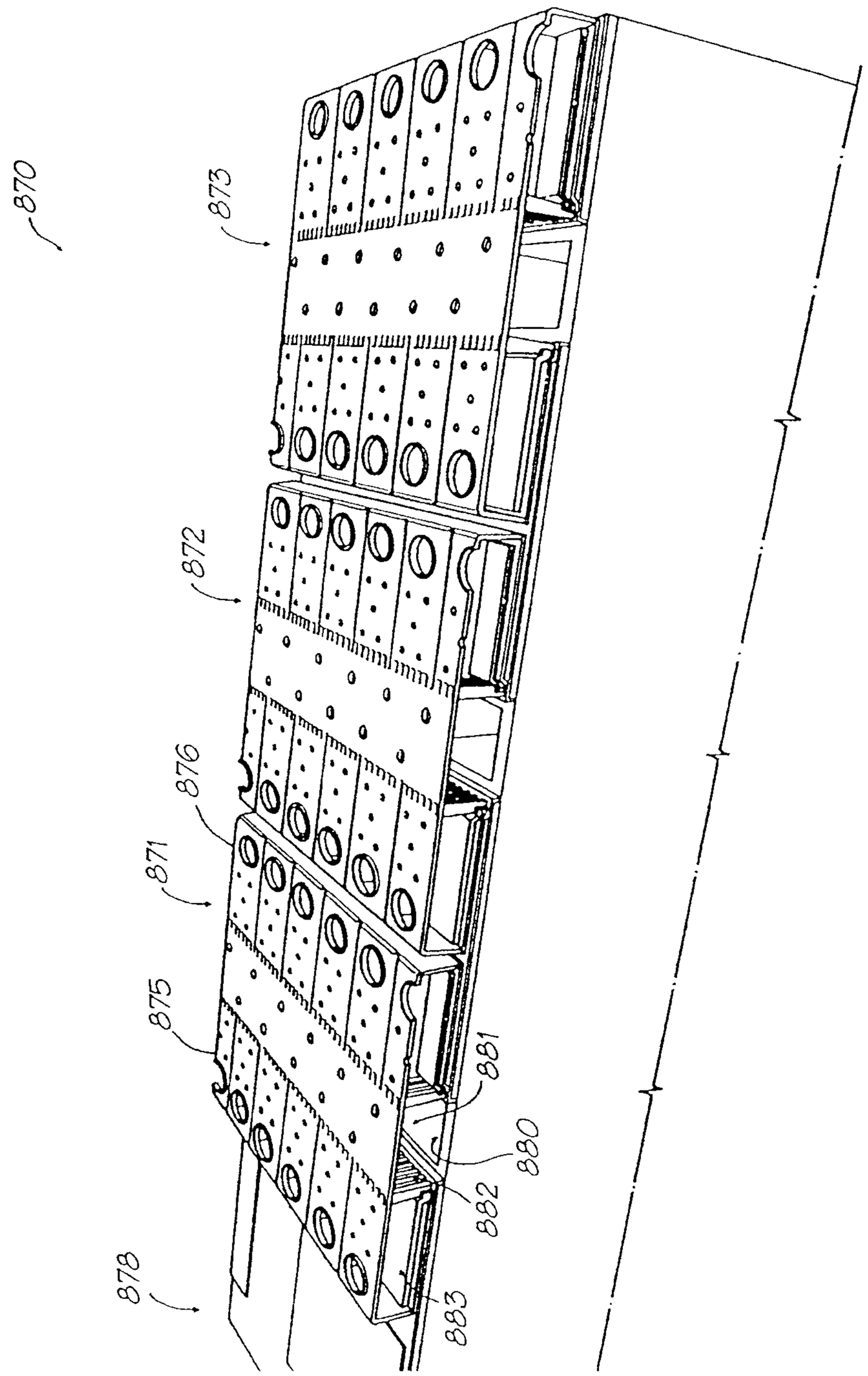

FIG. 211

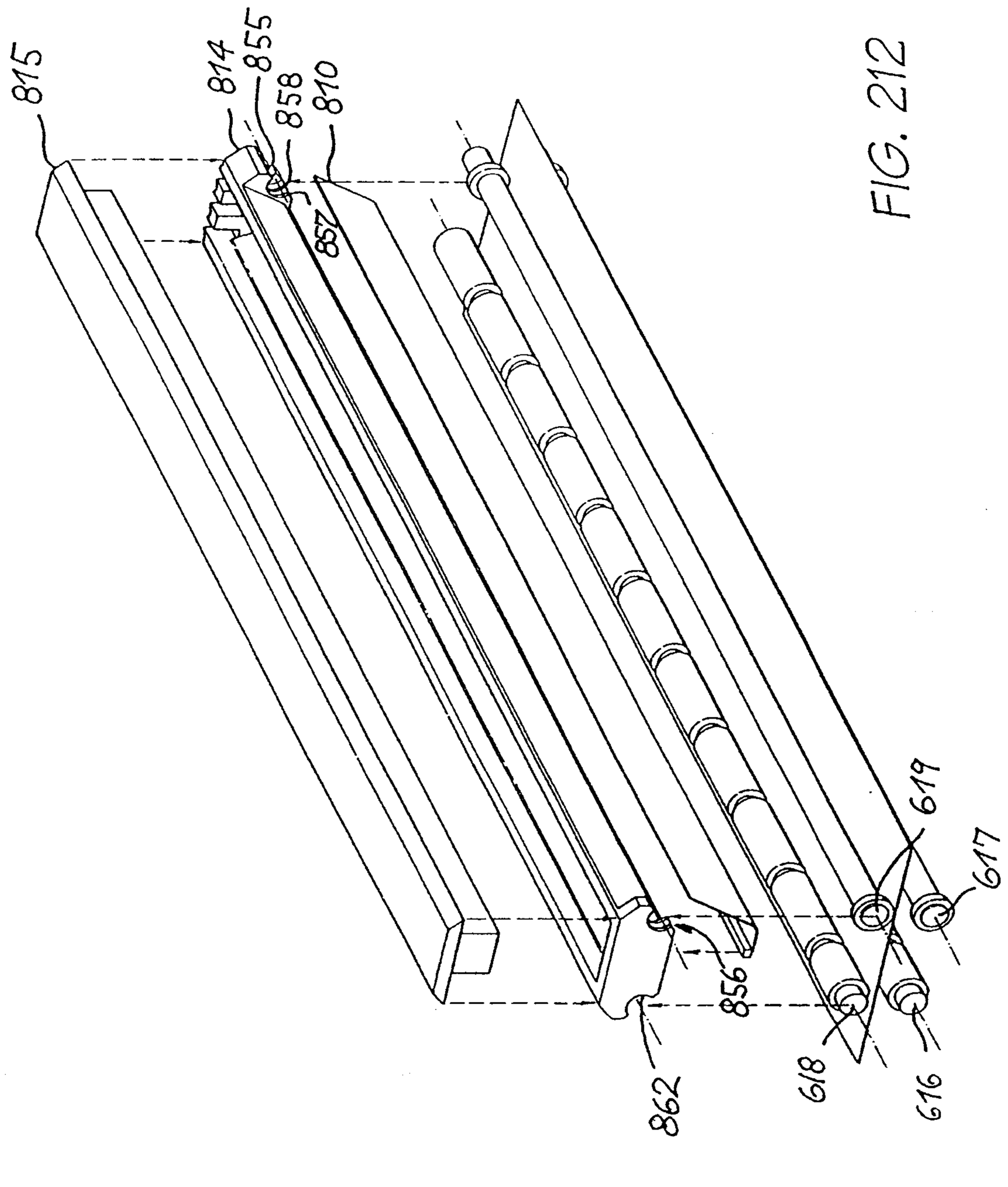

FIG. 212

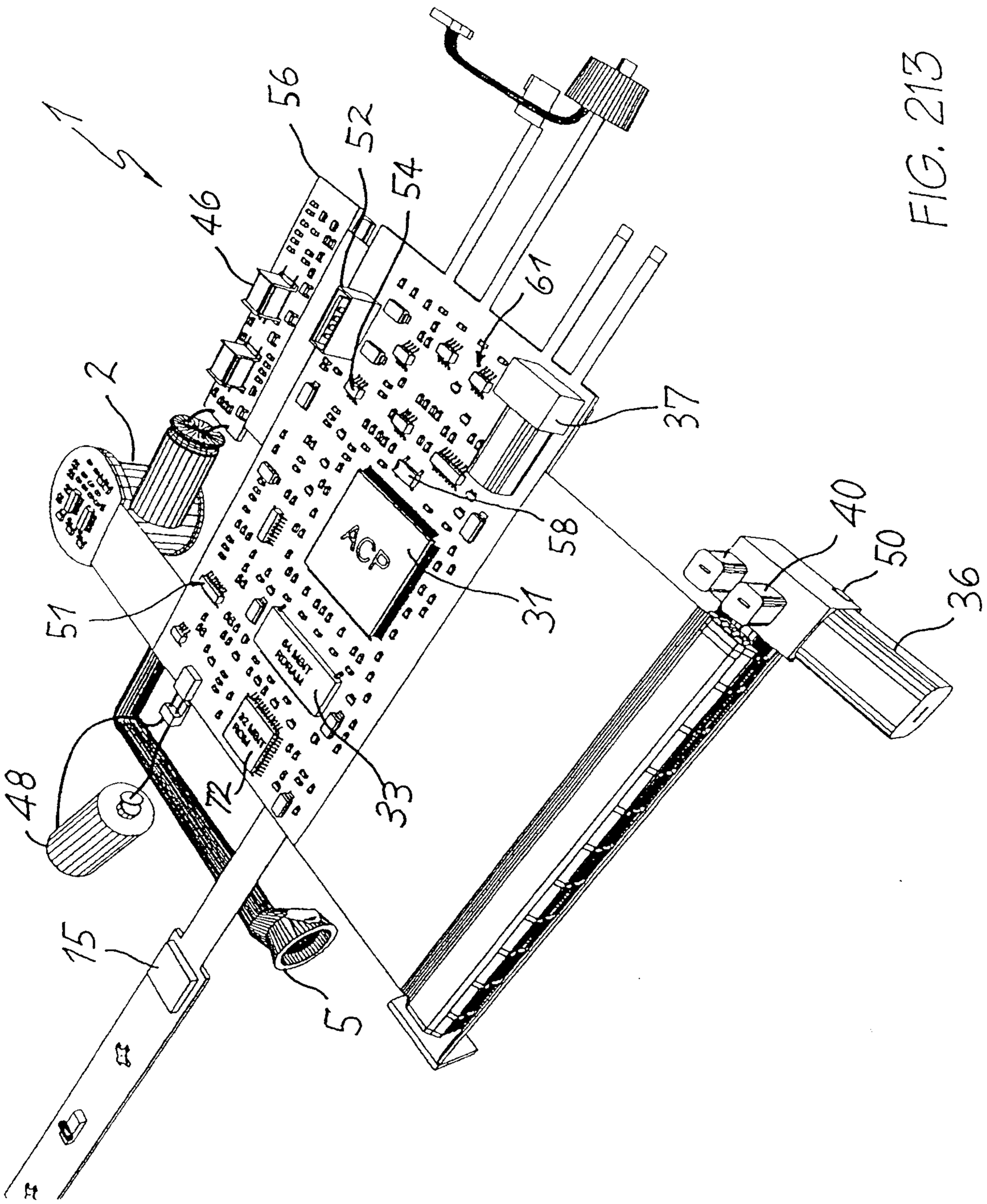

FIG. 213

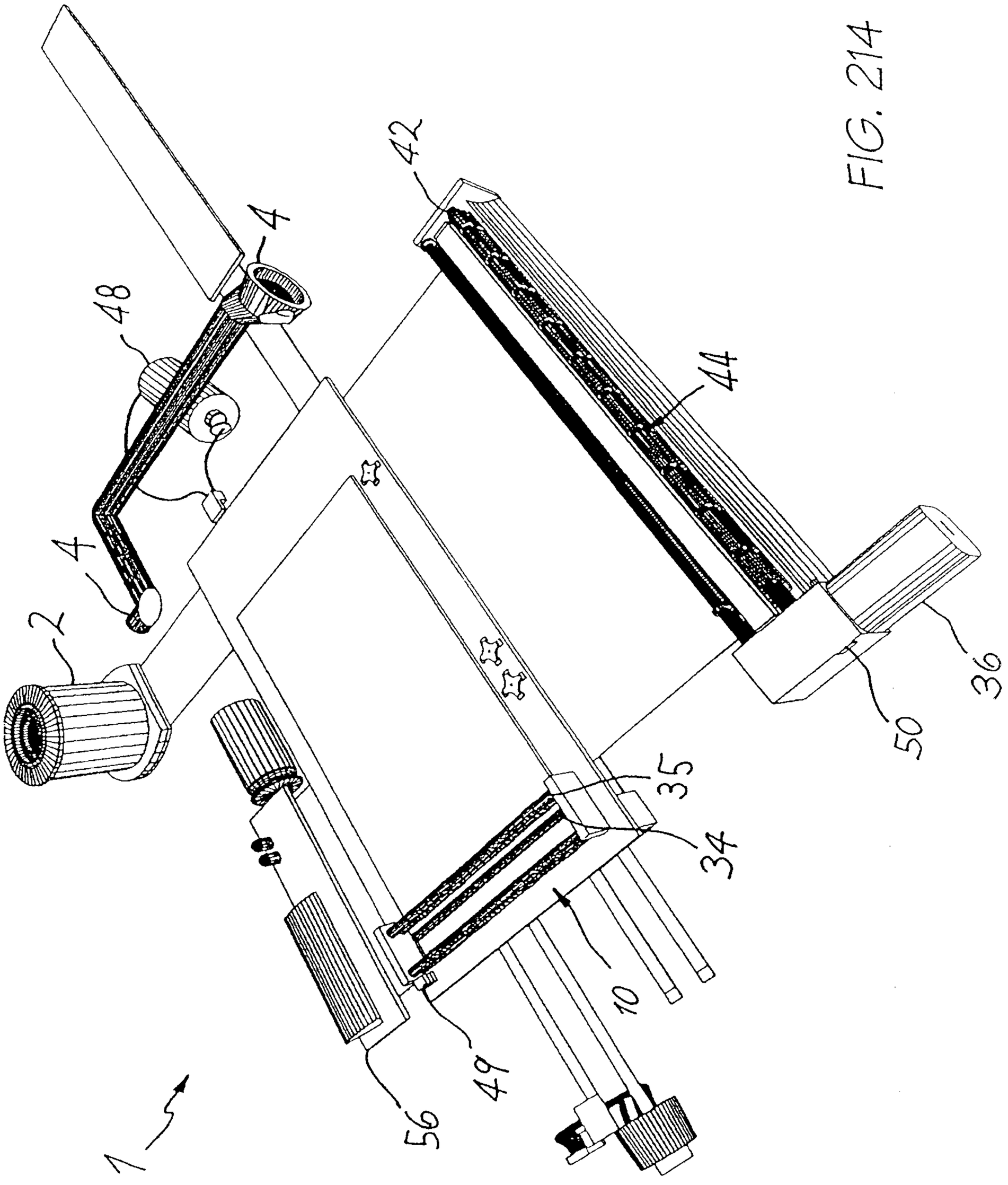

FIG. 214

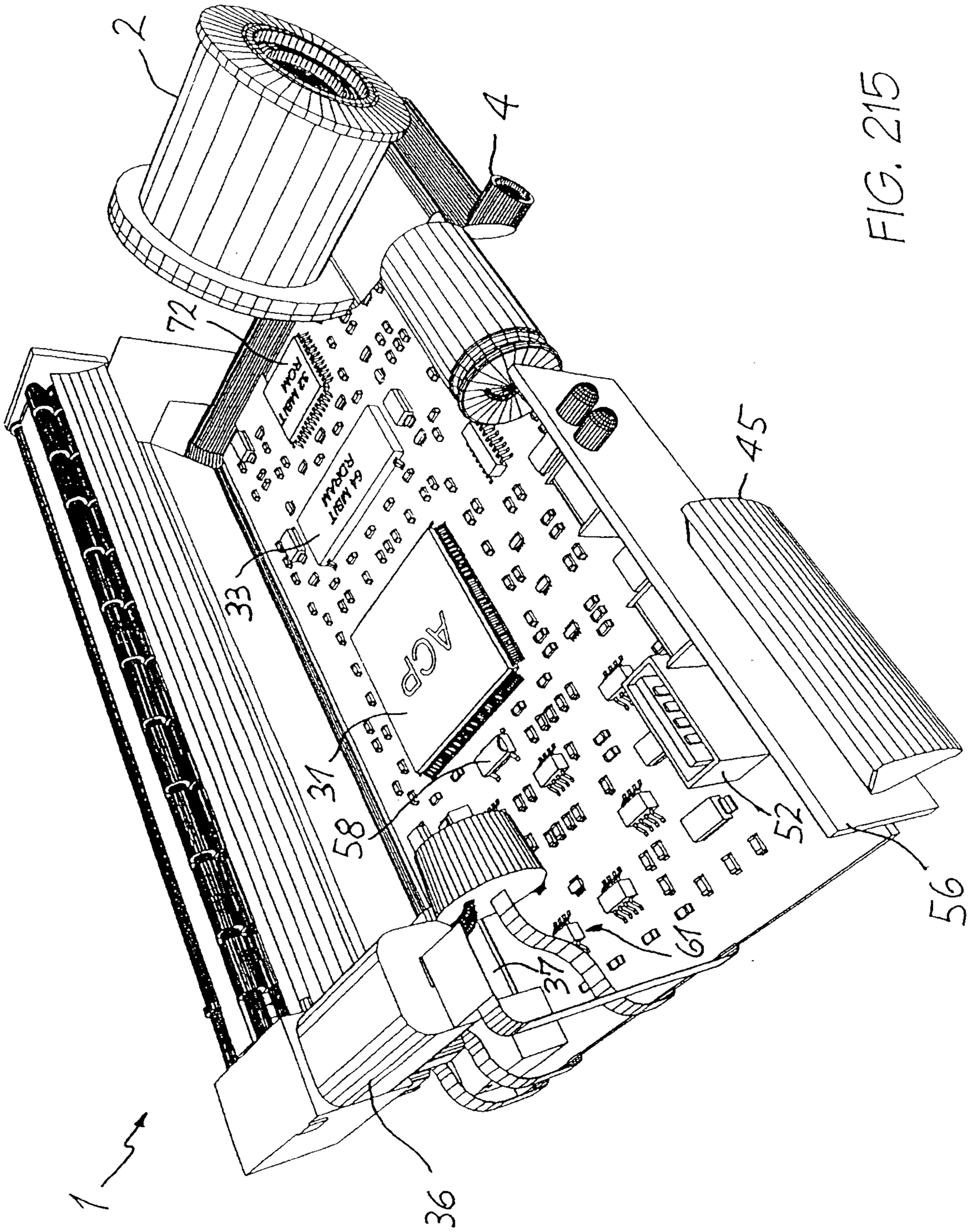

FIG. 215

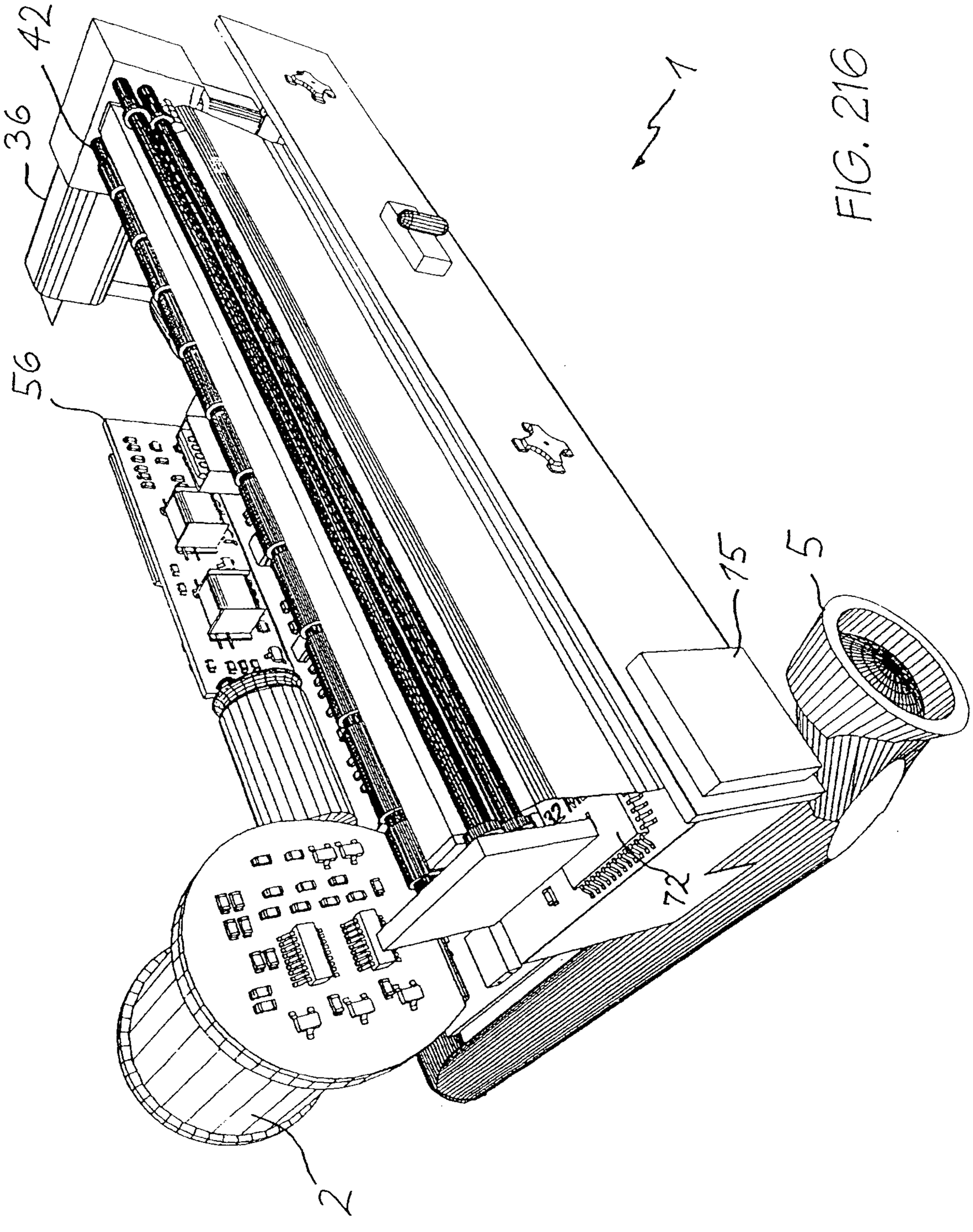

FIG. 1

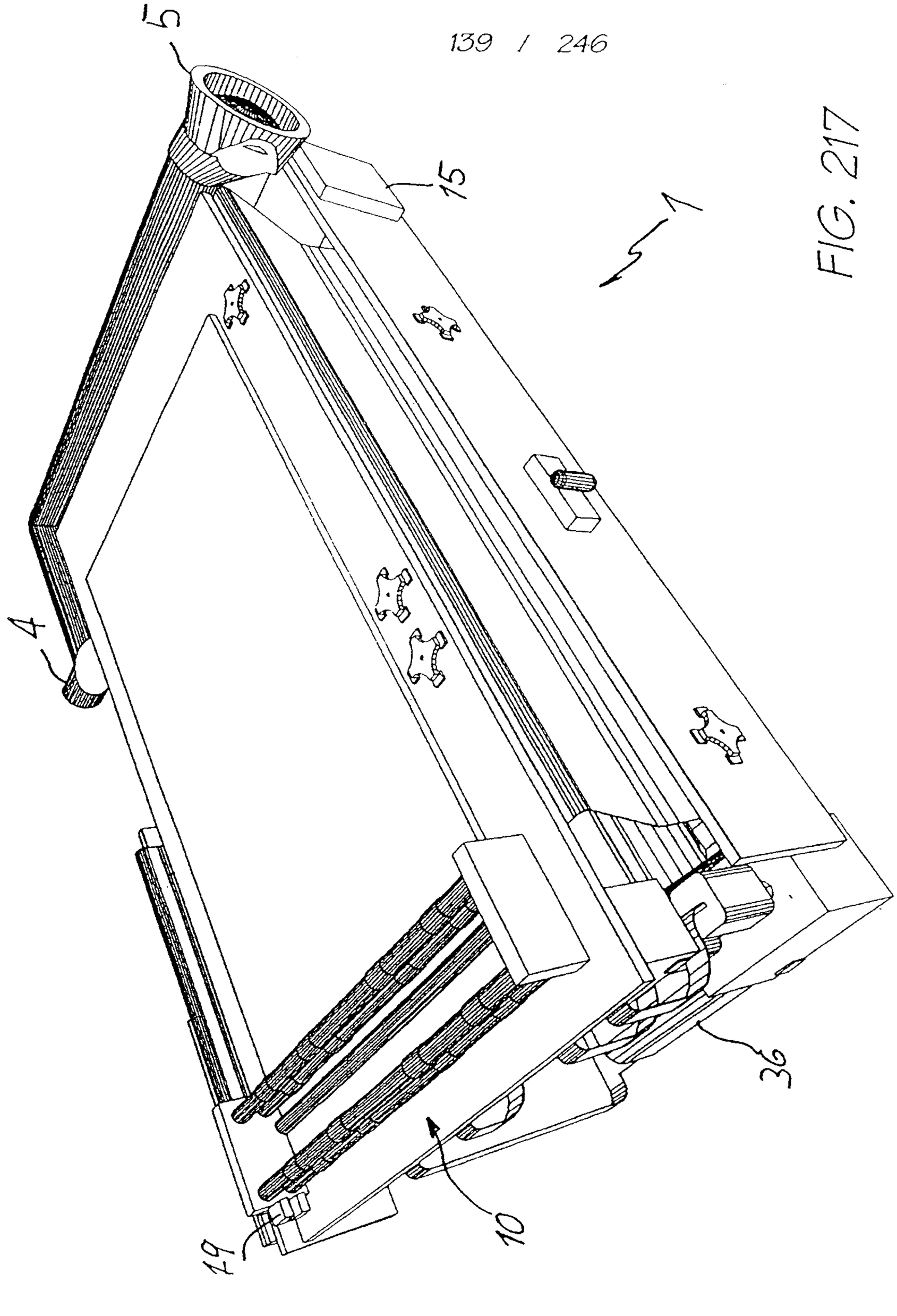

FIG. 2

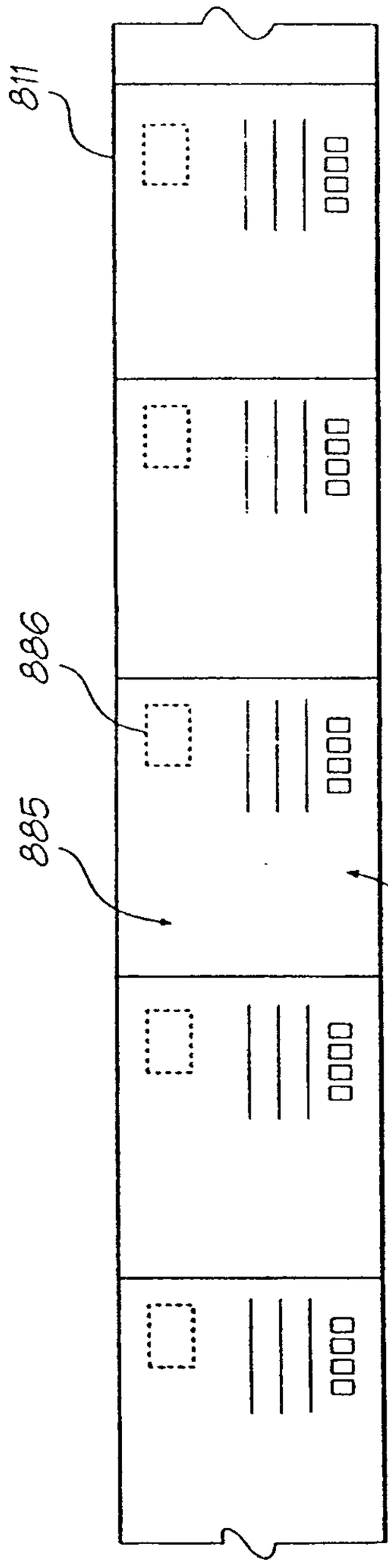

FIG. 218

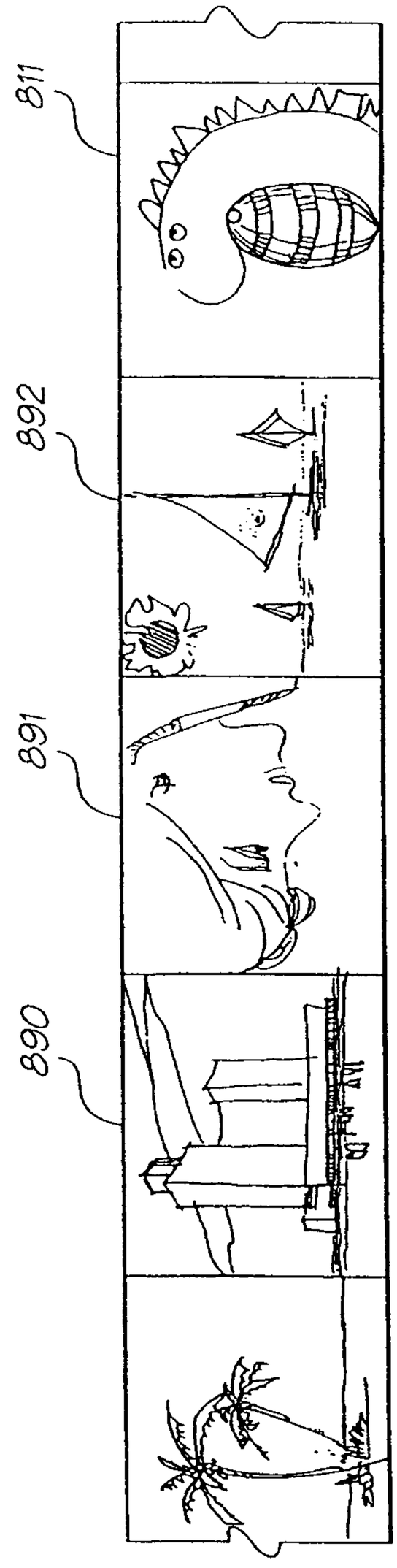

FIG. 219

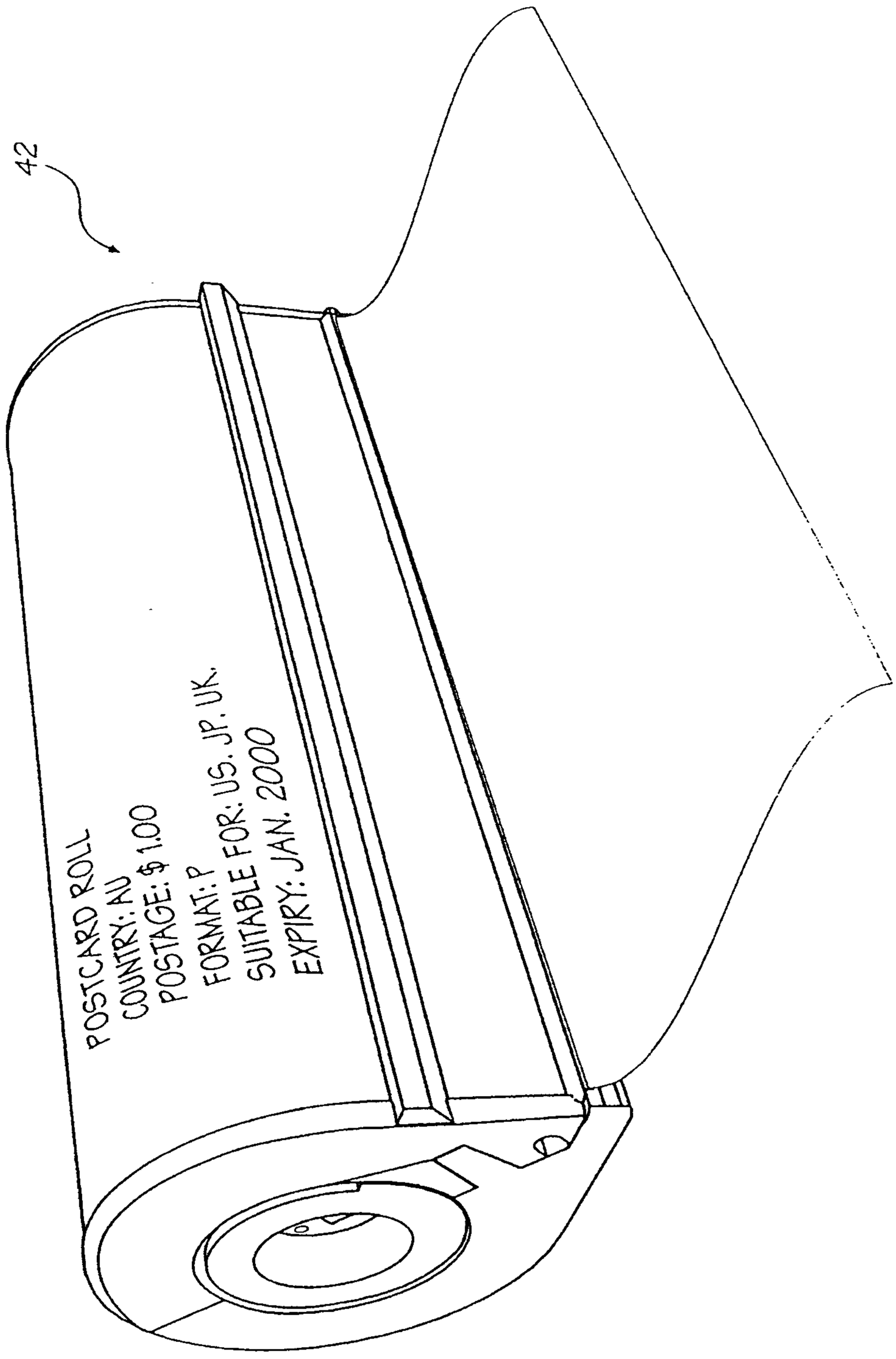
42
POSTCARD ROLL
COUNTRY: AU
POSTAGE: $1.00
FORMAT: P
SUITABLE FOR: US. JP. UK.
EXPIRY: JAN. 2000

FIG. 220

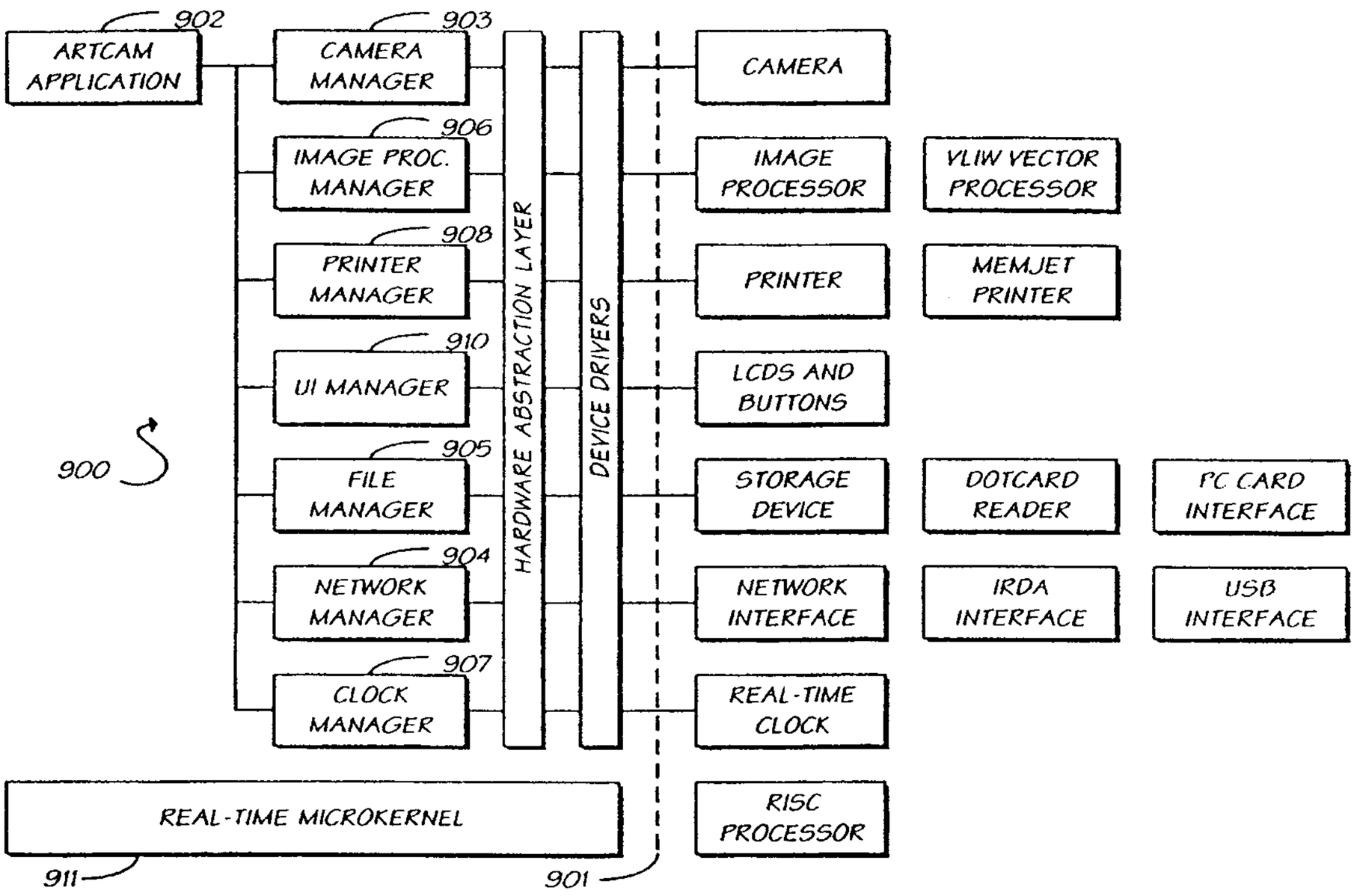
902
ARTCAM APPLICATION
903
CAMERA MANAGER
906
IMAGE PROC. MANAGER
908
PRINTER MANAGER
910
UI MANAGER
905
FILE MANAGER
904
NETWORK MANAGER
907
CLOCK MANAGER
900
HARDWARE ABSTRACTION LAYER
DEVICE DRIVERS
CAMERA
IMAGE PROCESSOR
VLIW VECTOR PROCESSOR
PRINTER
MEMJET PRINTER
LCDS AND BUTTONS
STORAGE DEVICE
DOTCARD READER
PC CARD INTERFACE
NETWORK INTERFACE
IRDA INTERFACE
USB INTERFACE
REAL-TIME CLOCK
RISC PROCESSOR
REAL-TIME MICROKERNEL
911
901

FIG. 221

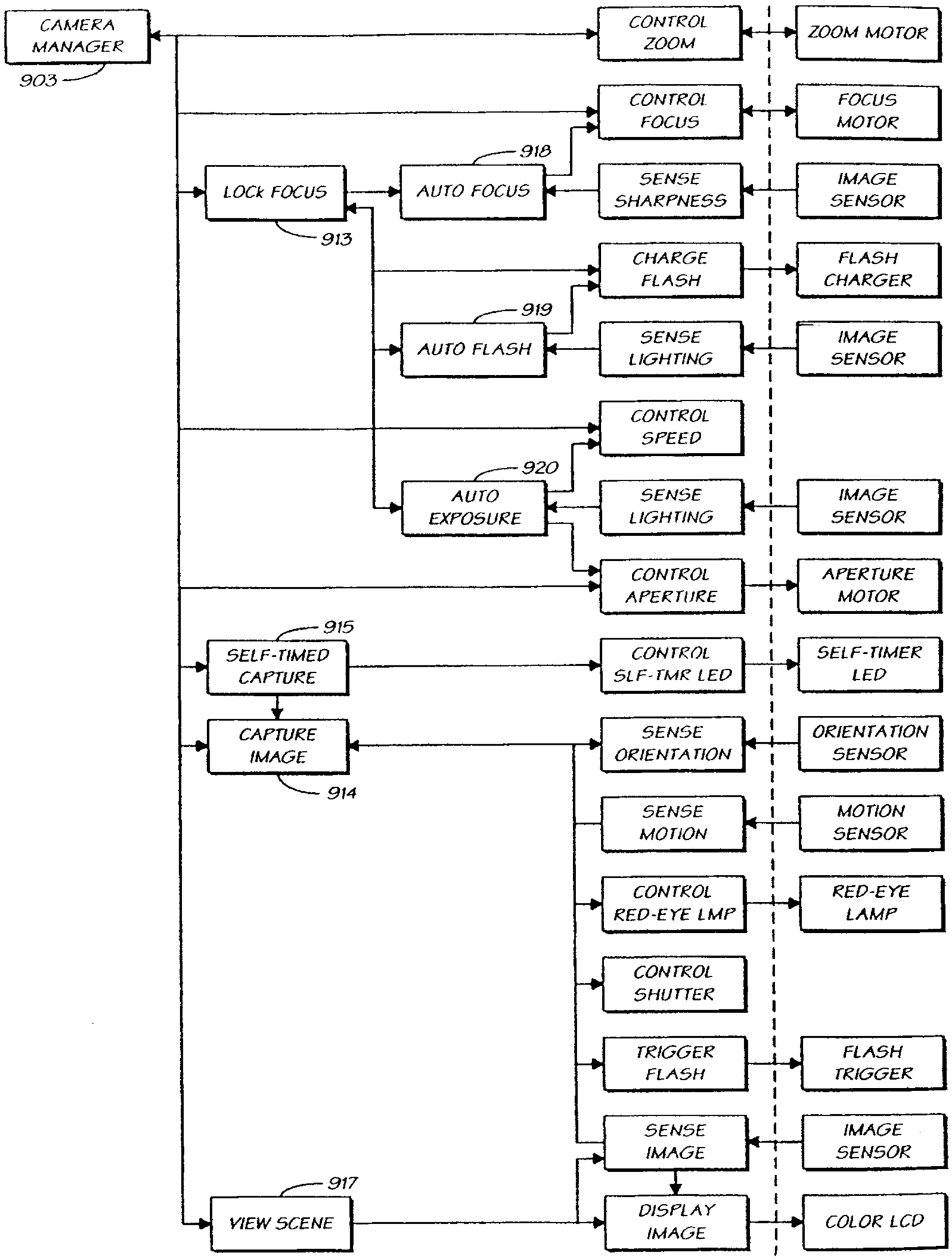
CAMERA MANAGER
903
CONTROL ZOOM
ZOOM MOTOR
CONTROL FOCUS
FOCUS MOTOR
918
LOCk FOCUS
AUTO FOCUS
SENSE SHARPNESS
IMAGE SENSOR
913
CHARGE FLASH
FLASH CHARGER
919
AUTO FLASH
SENSE LIGHTING
IMAGE SENSOR
CONTROL SPEED
920
AUTO EXPOSURE
SENSE LIGHTING
IMAGE SENSOR
CONTROL APERTURE
APERTURE MOTOR
915
SELF-TIMED CAPTURE
CONTROL SLF-TMR LED
SELF-TIMER LED
CAPTURE IMAGE
914
SENSE ORIENTATION
ORIENTATION SENSOR
SENSE MOTION
MOTION SENSOR
CONTROL RED-EYE LMP
RED-EYE LAMP
CONTROL SHUTTER
TRIGGER FLASH
FLASH TRIGGER
SENSE IMAGE
IMAGE SENSOR
917
VIEW SCENE
DISPLAY IMAGE
COLOR LCD

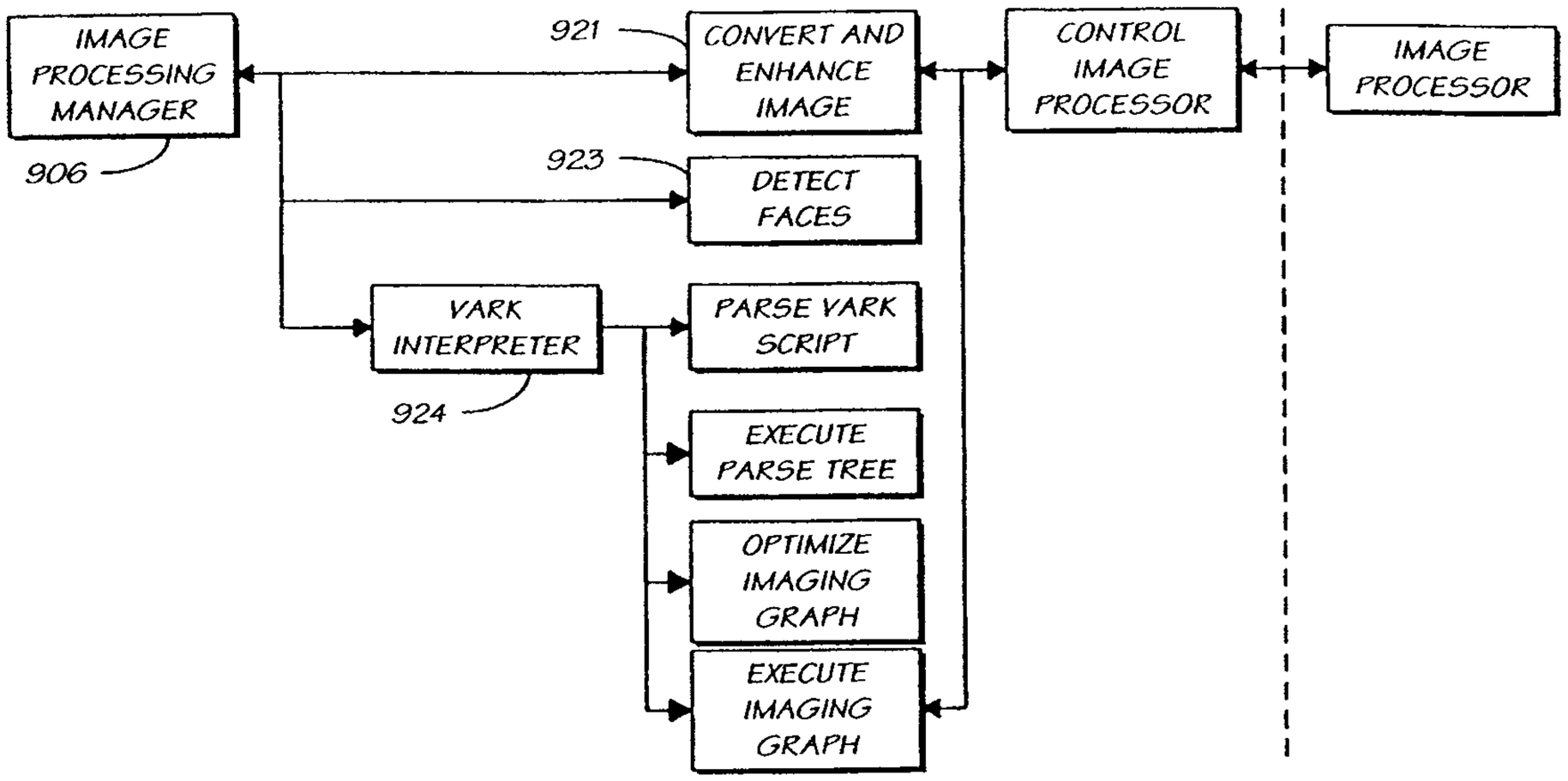
IMAGE PROCESSING MANAGER
906
921
CONVERT AND ENHANCE IMAGE
923
DETECT FACES
VARK INTERPRETER
924
PARSE VARK SCRIPT
EXECUTE PARSE TREE
OPTIMIZE IMAGING GRAPH
EXECUTE IMAGING GRAPH
CONTROL IMAGE PROCESSOR
IMAGE PROCESSOR

FIG. 223

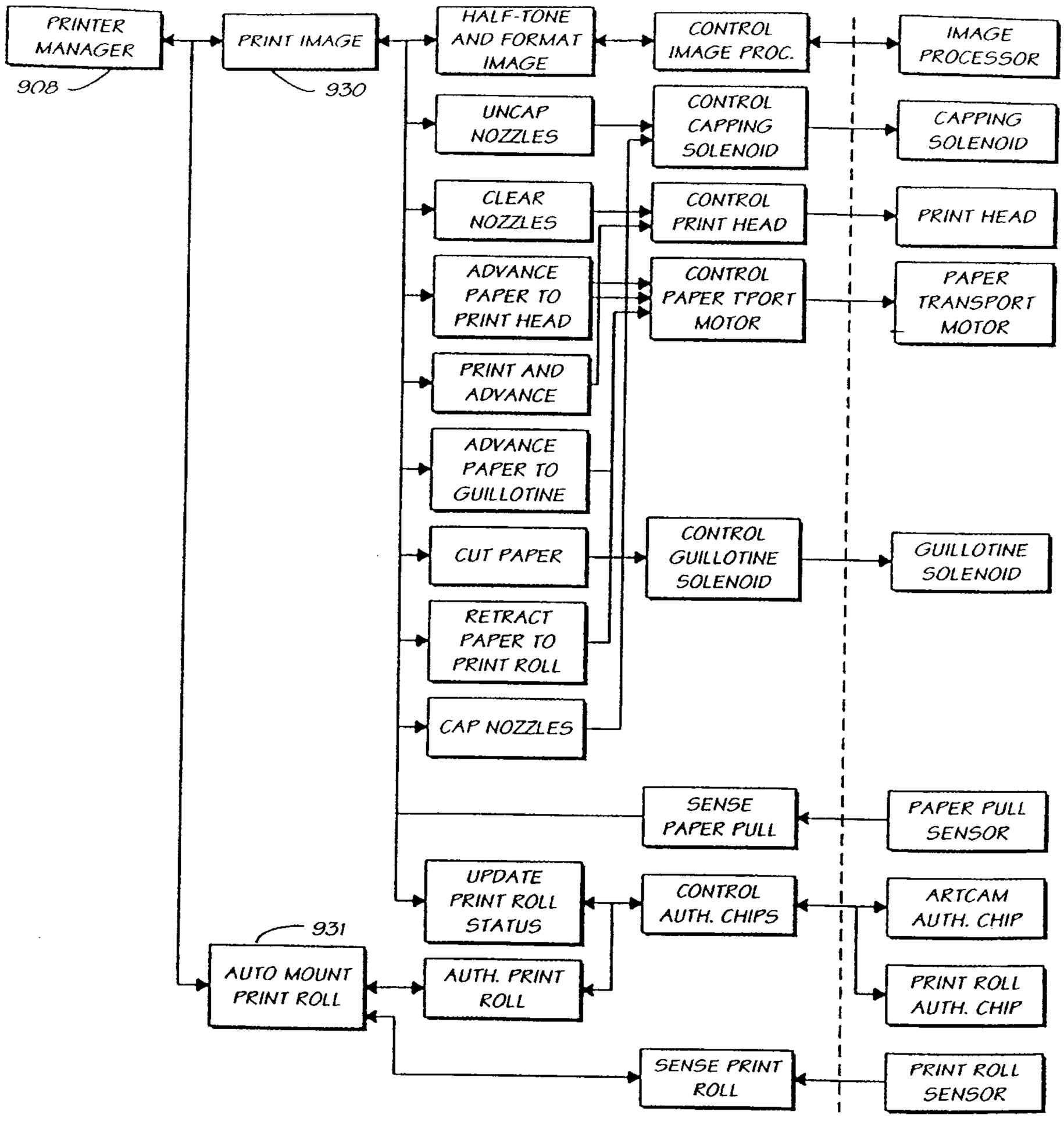
PRINTER MANAGER
908
PRINT IMAGE
930
HALF-TONE AND FORMAT IMAGE
CONTROL IMAGE PROC.
IMAGE PROCESSOR
UNCAP NOZZLES
CONTROL CAPPING SOLENOID
CAPPING SOLENOID
CLEAR NOZZLES
CONTROL PRINT HEAD
PRINT HEAD
ADVANCE PAPER TO PRINT HEAD
CONTROL PAPER TPORT MOTOR
PAPER TRANSPORT MOTOR
PRINT AND ADVANCE
ADVANCE PAPER TO GUILLOTINE
CUT PAPER
CONTROL GUILLOTINE SOLENOID
GUILLOTINE SOLENOID
RETRACT PAPER TO PRINT ROLL
CAP NOZZLES
SENSE PAPER PULL
PAPER PULL SENSOR
UPDATE PRINT ROLL STATUS
CONTROL AUTH. CHIPS
ARTCAM AUTH. CHIP
PRINT ROLL AUTH. CHIP
931
AUTO MOUNT PRINT ROLL
AUTH. PRINT ROLL
SENSE PRINT ROLL
PRINT ROLL SENSOR

FIG. 224

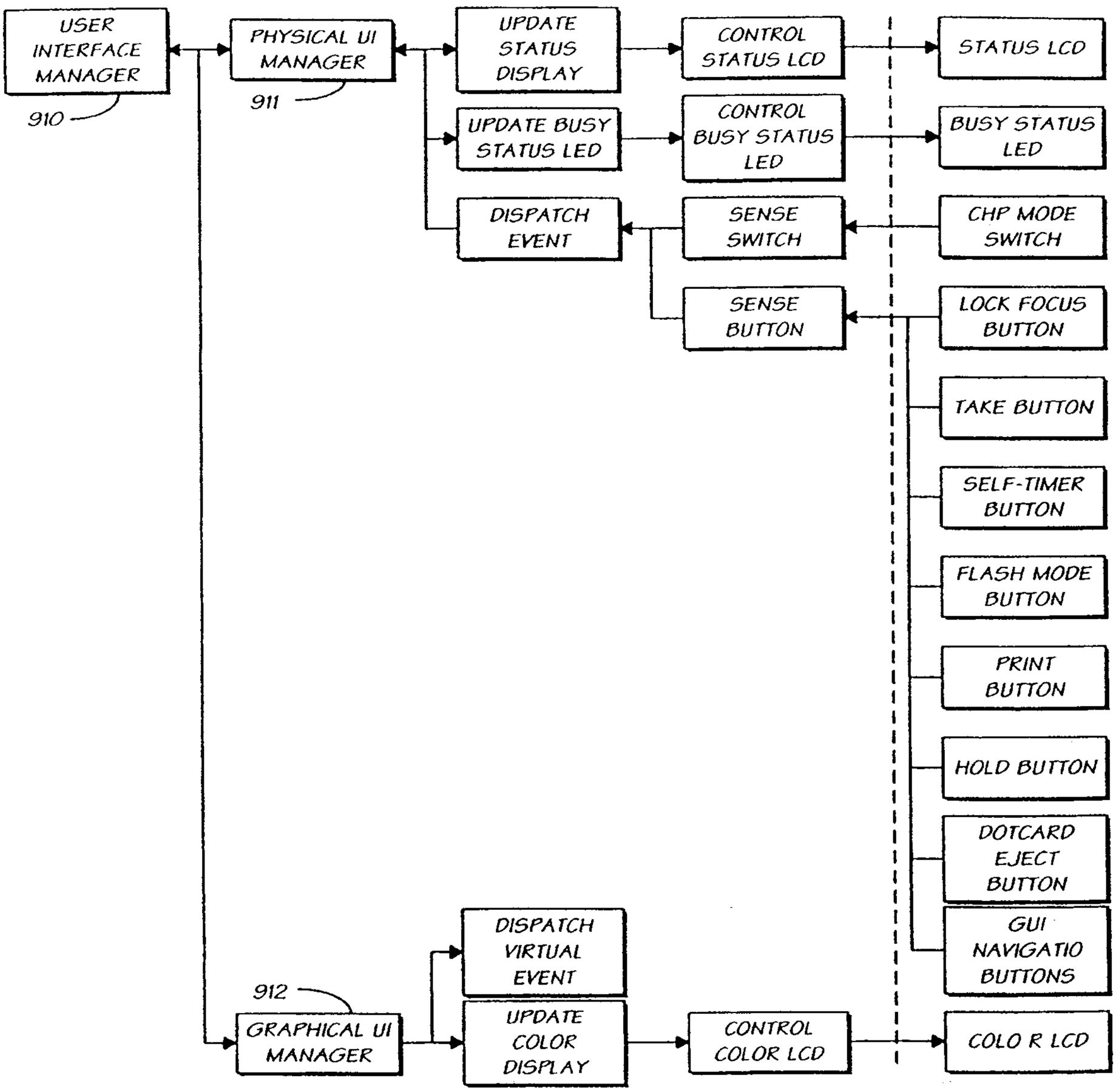
USER INTERFACE MANAGER
910
PHYSICAL UI MANAGER
911
UPDATE STATUS DISPLAY
UPDATE BUSY STATUS LED
DISPATCH EVENT
CONTROL STATUS LCD
CONTROL BUSY STATUS LED
SENSE SWITCH
SENSE BUTTON
STATUS LCD
BUSY STATUS LED
CHP MODE SWITCH
LOCK FOCUS BUTTON
TAKE BUTTON
SELF-TIMER BUTTON
FLASH MODE BUTTON
PRINT BUTTON
HOLD BUTTON
DOTCARD EJECT BUTTON
GUI NAVIGATIO BUTTONS
912
GRAPHICAL UI MANAGER
DISPATCH VIRTUAL EVENT
UPDATE COLOR DISPLAY
CONTROL COLOR LCD
COLO R LCD

FIG. 225

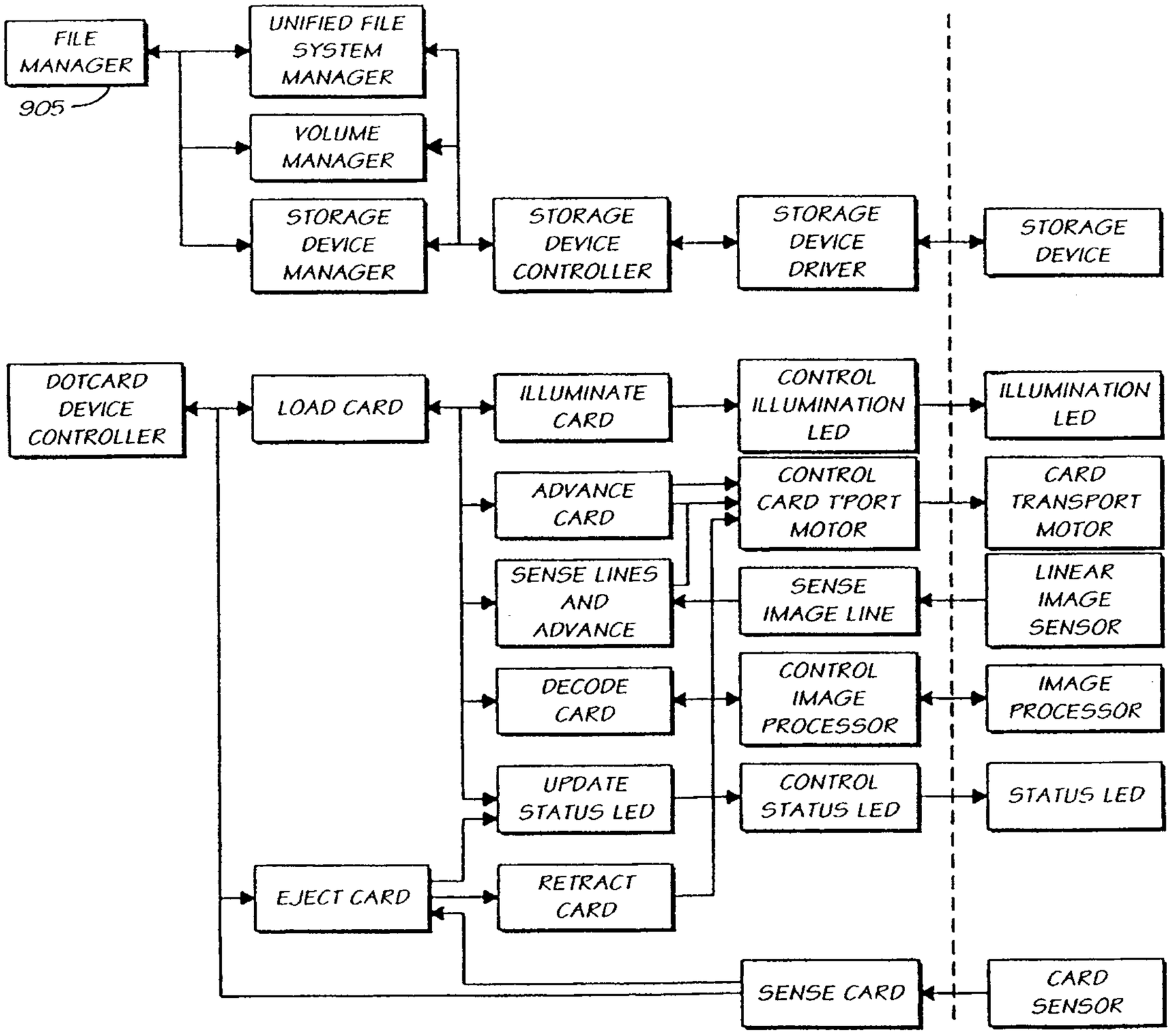
FILE MANAGER
905
UNIFIED FILE SYSTEM MANAGER
VOLUME MANAGER
STORAGE DEVICE MANAGER
STORAGE DEVICE CONTROLLER
STORAGE DEVICE DRIVER
STORAGE DEVICE
DOTCARD DEVICE CONTROLLER
LOAD CARD
ILLUMINATE CARD
ADVANCE CARD
SENSE LINES AND ADVANCE
DECODE CARD
UPDATE STATUS LED
EJECT CARD
RETRACT CARD
SENSE CARD
CONTROL ILLUMINATION LED
CONTROL CARD T'PORT MOTOR
SENSE IMAGE LINE
CONTROL IMAGE PROCESSOR
CONTROL STATUS LED
CARD SENSOR
ILLUMINATION LED
CARD TRANSPORT MOTOR
LINEAR IMAGE SENSOR
IMAGE PROCESSOR
STATUS LED

FIG. 226

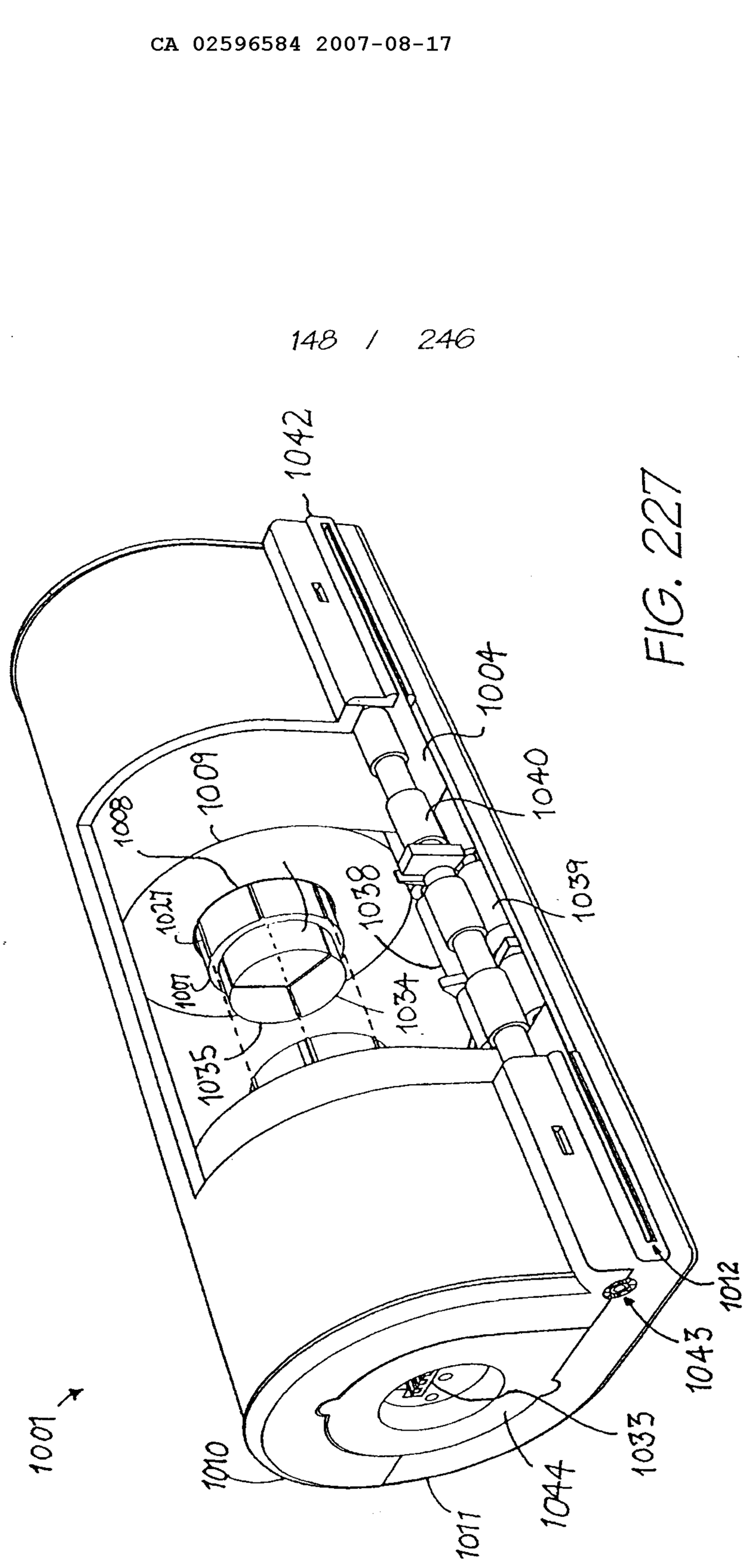
1042
1004
1040
1039
1009
1008
1038
1027
1007
1034
1035
1001
1010
1011
1044
1033
1043
1012

FIG. 227

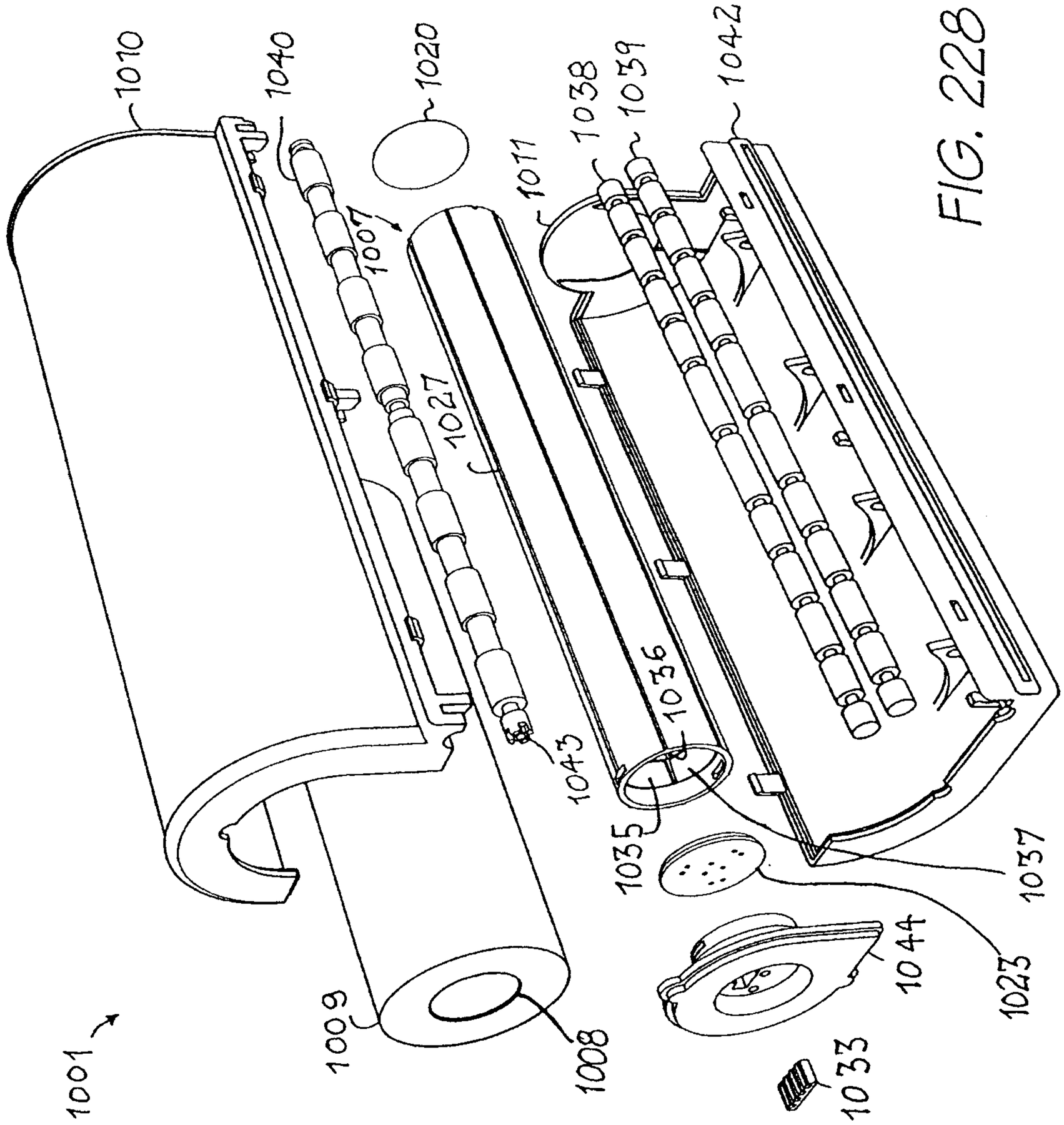
1001
1010
1040
1020
1007
1027
1011
1038
1039
1042
1043
1036
1035
1009
1008
1033
1044
1023
1037

FIG. 228

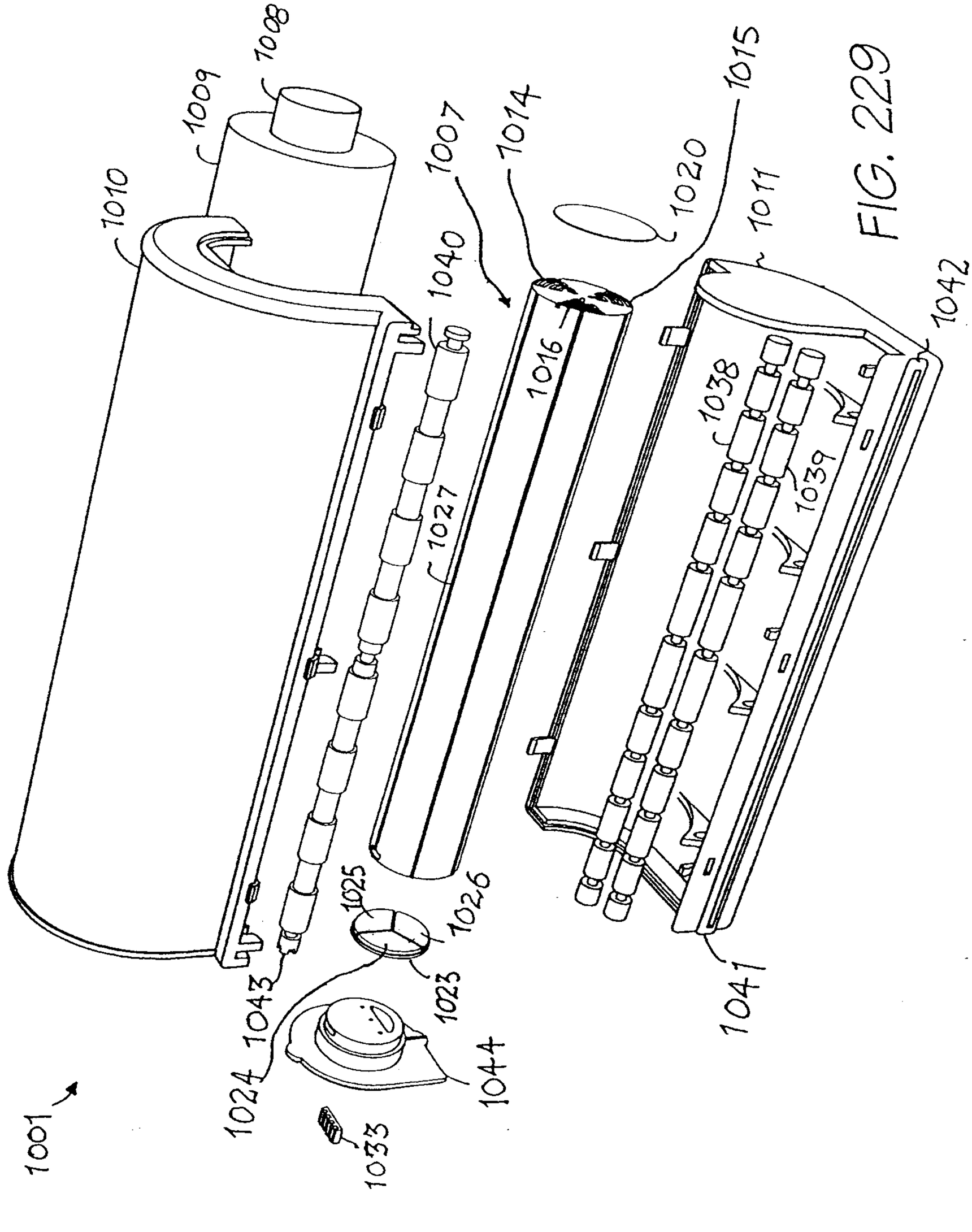
1001
1009
1008
1010
1007
1014
1015
1020
1011
1040
1016
1038
1042
1027
1039
1025
1026
1043
1023
1024
1044
1041
1033

FIG. 229

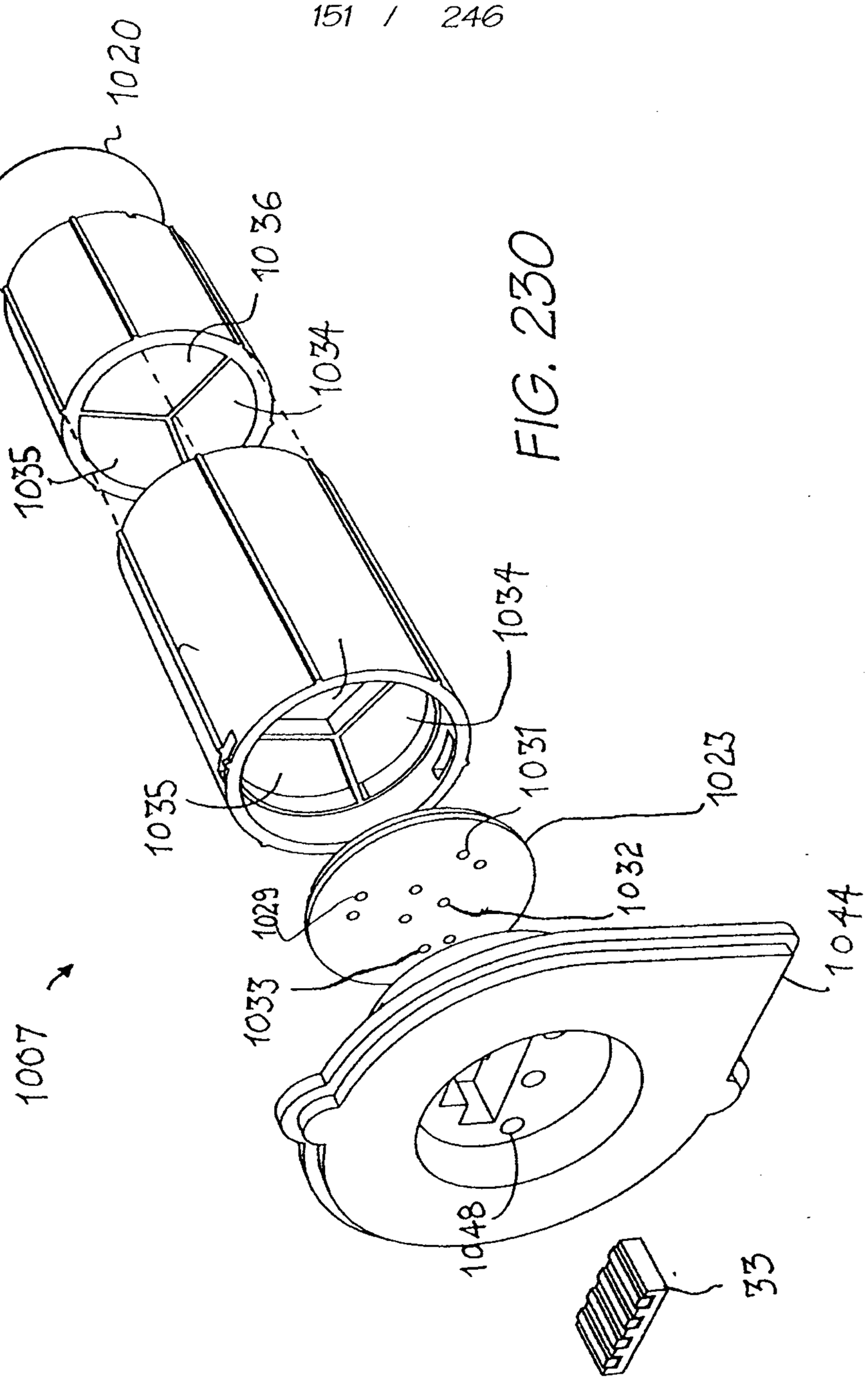
1020
1036
1034
1035
1034
1035
1031
1023
1029
1032
1033
1044
1048
1007
33

FIG. 230

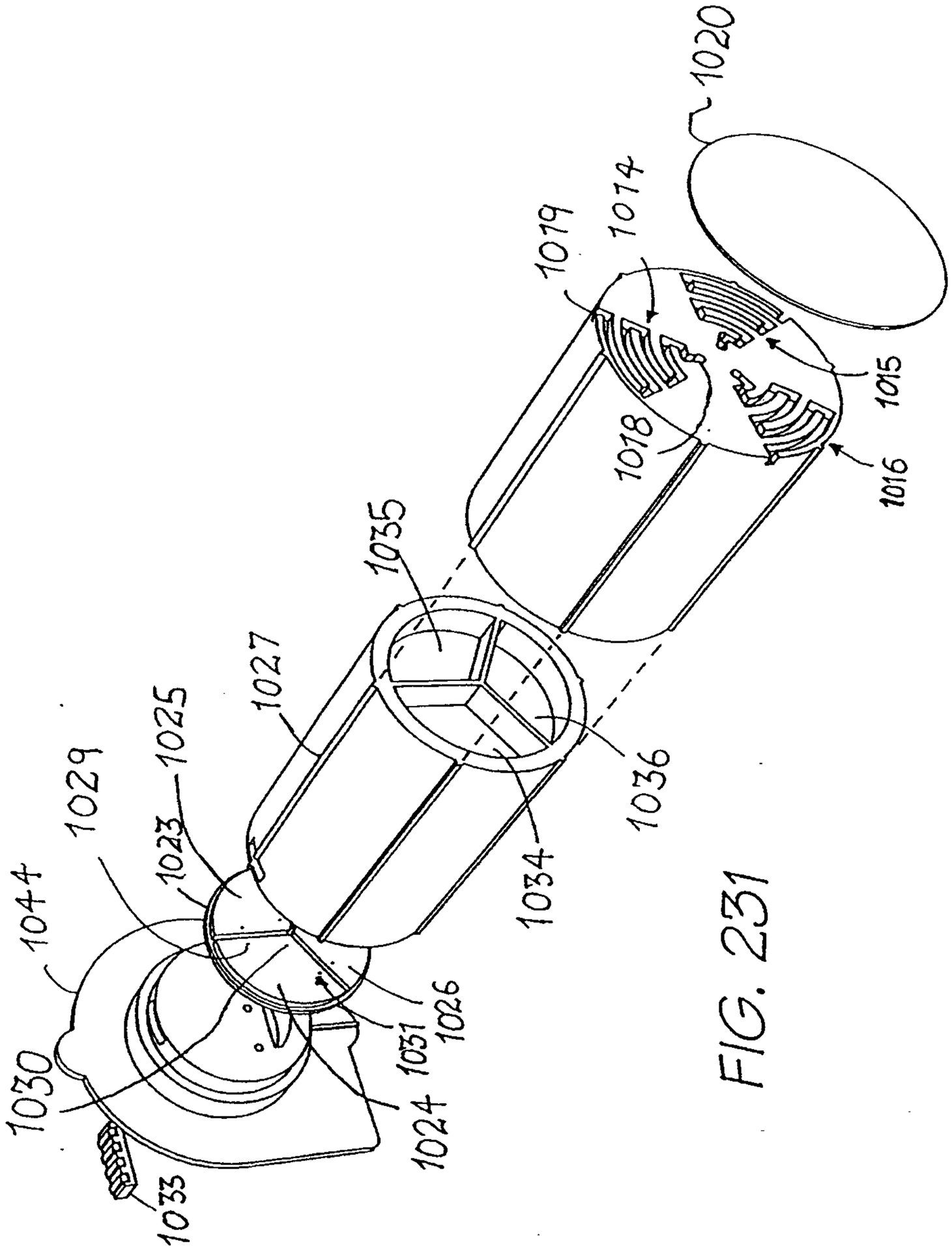
1020
1019
1014
1015
1018
1016
1035
1027
1025
1029
1023
1044
1030
1033
1026
1031
1024
1034
1036

FIG. 231

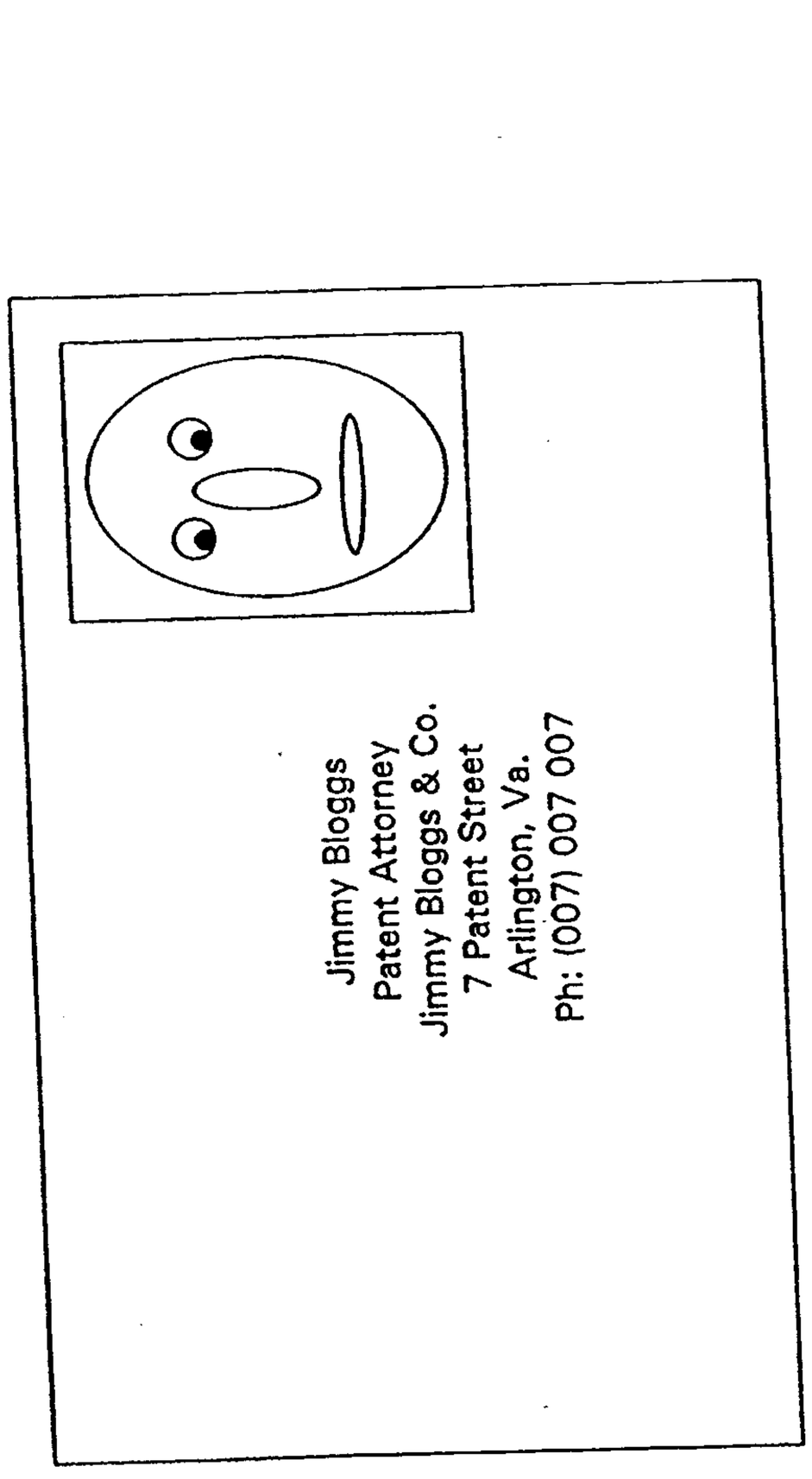
Jimmy Bloggs
Patent Attorney
Jimmy Bloggs & Co.
7 Patent Street
Arlington, Va.
Ph: (007) 007 007

FIG. 232

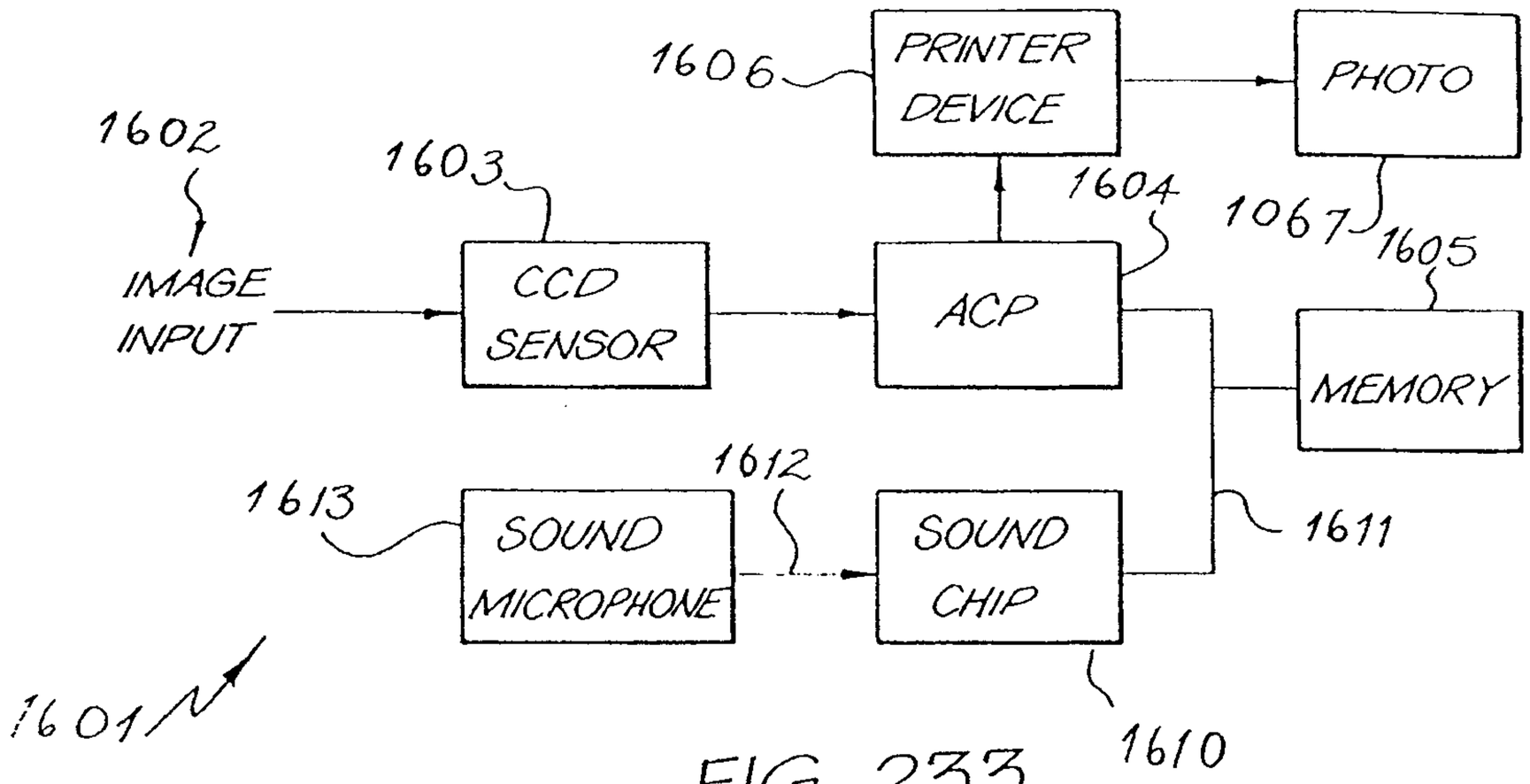

FIG. 233

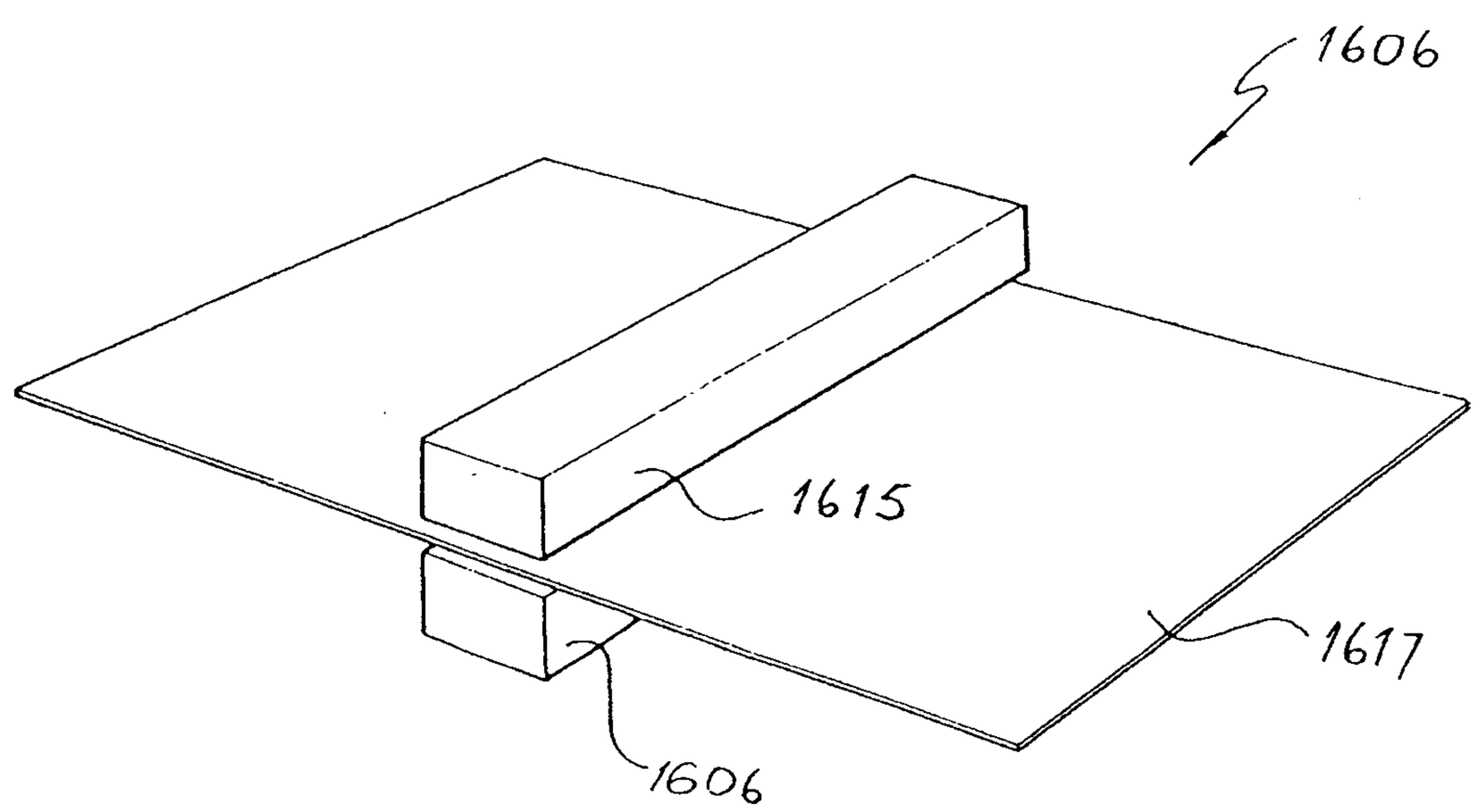

FIG. 234

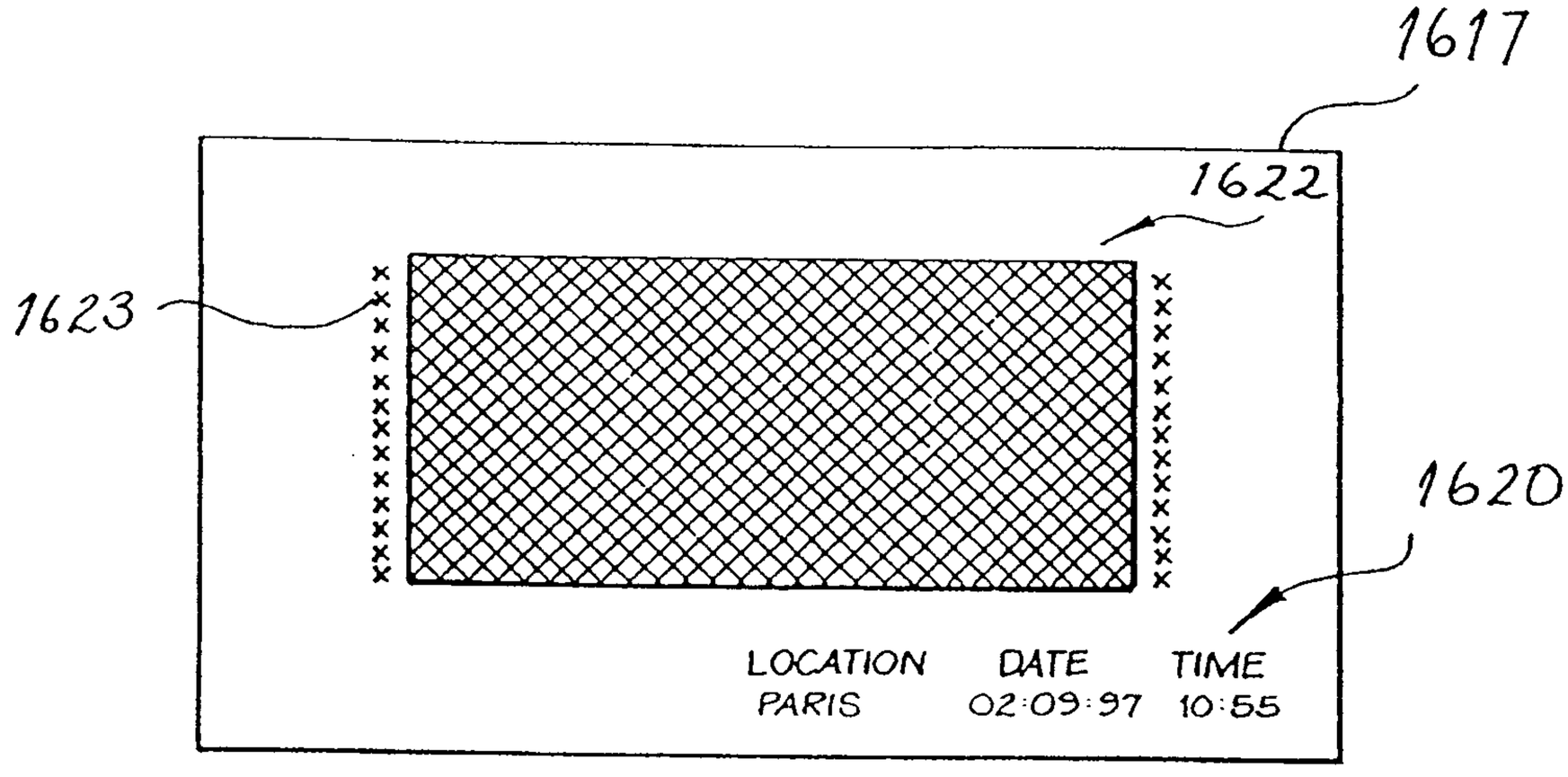

FIG. 235

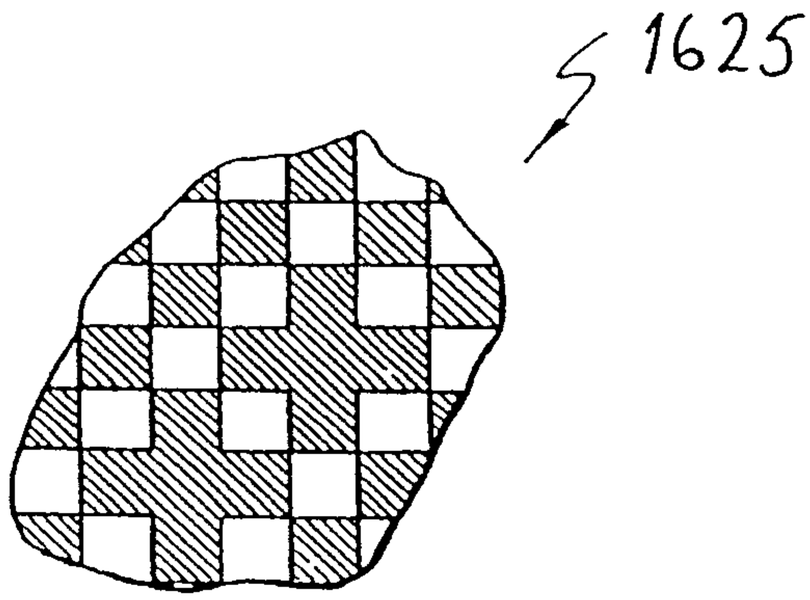

FIG. 236

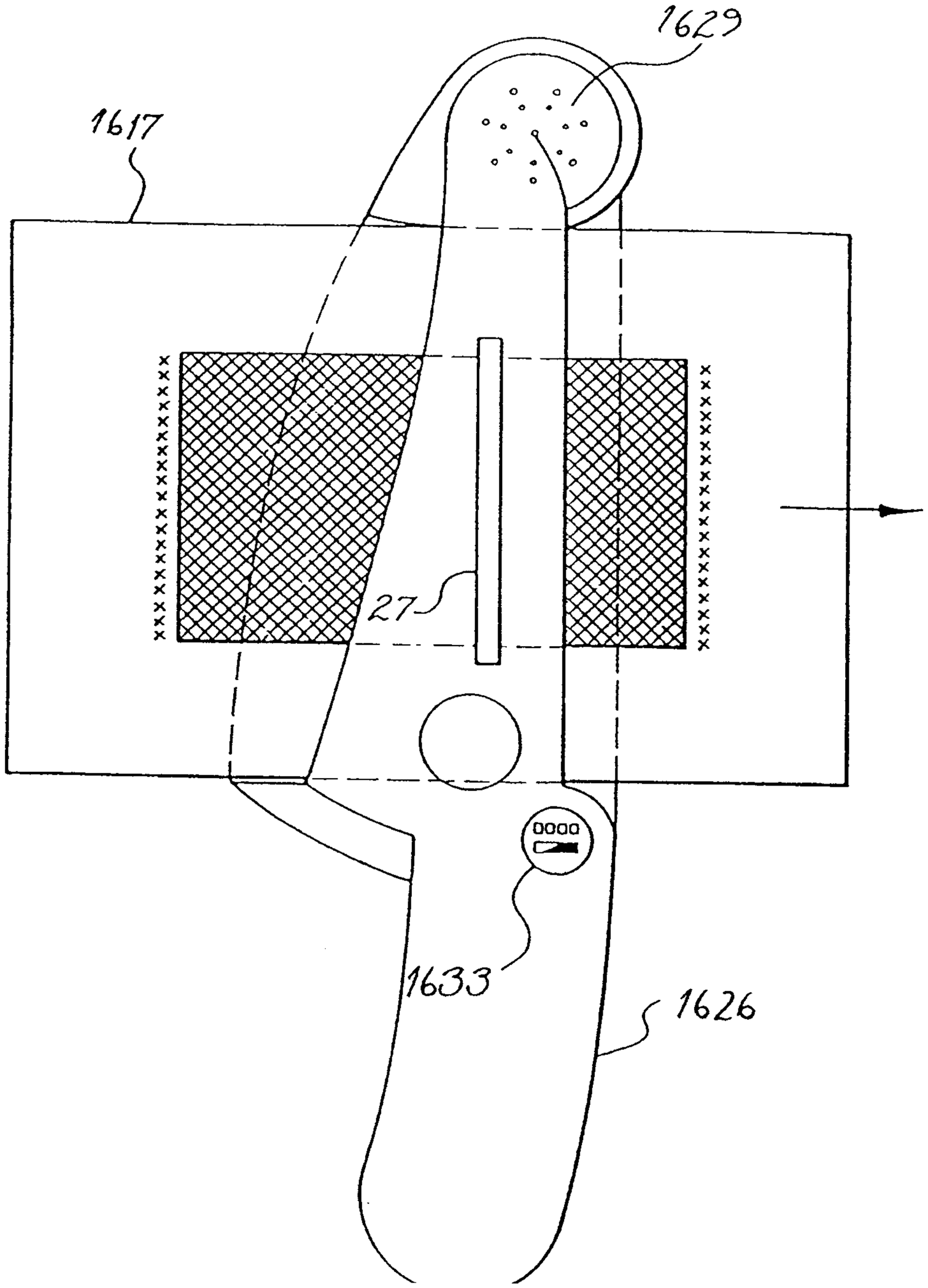
1629
1617
27
1633
1626

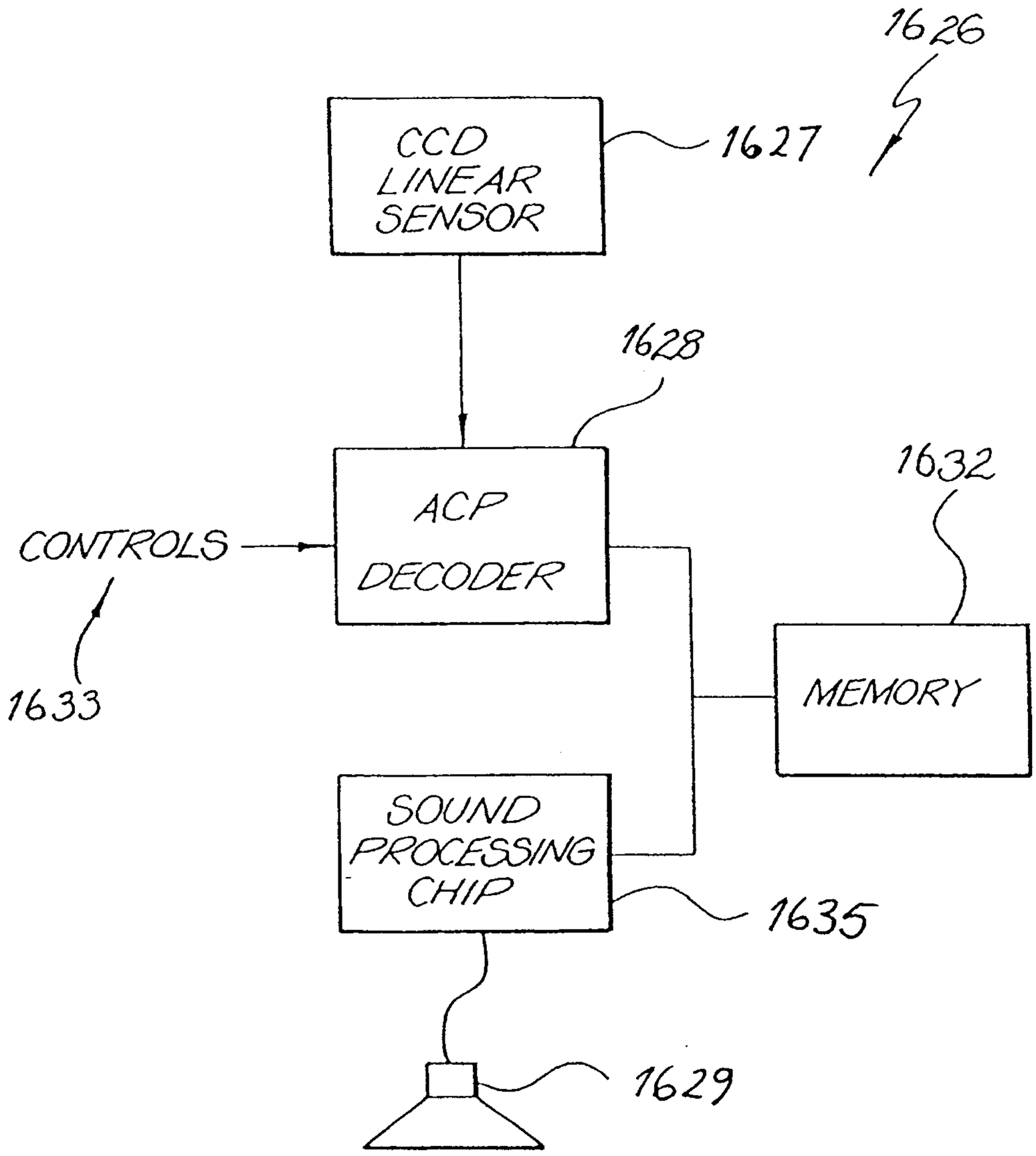
1626
CCD LINEAR SENSOR
1627
1628
ACP DECODER
CONTROLS
1633
1632
MEMORY
SOUND PROCESSING CHIP
1635
1629

FIG. 238

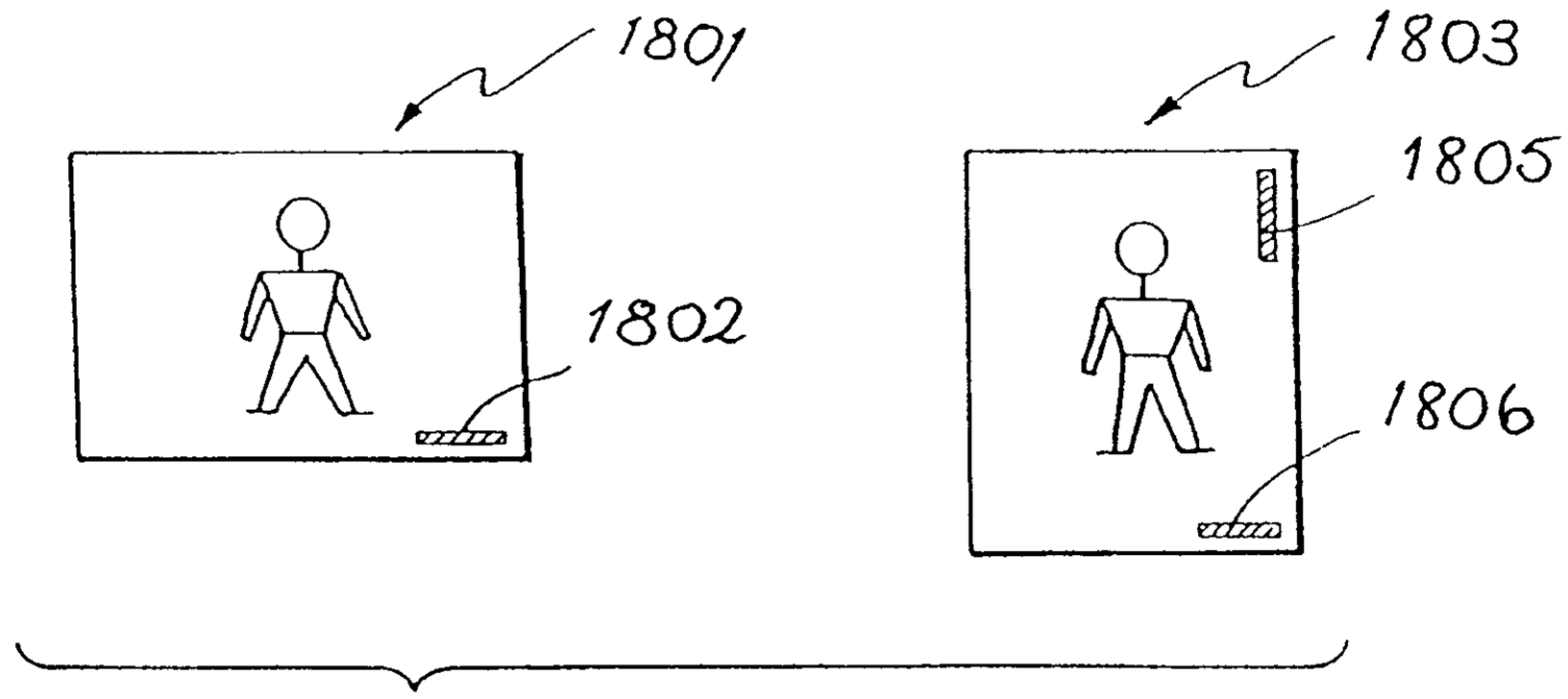

FIG. 239

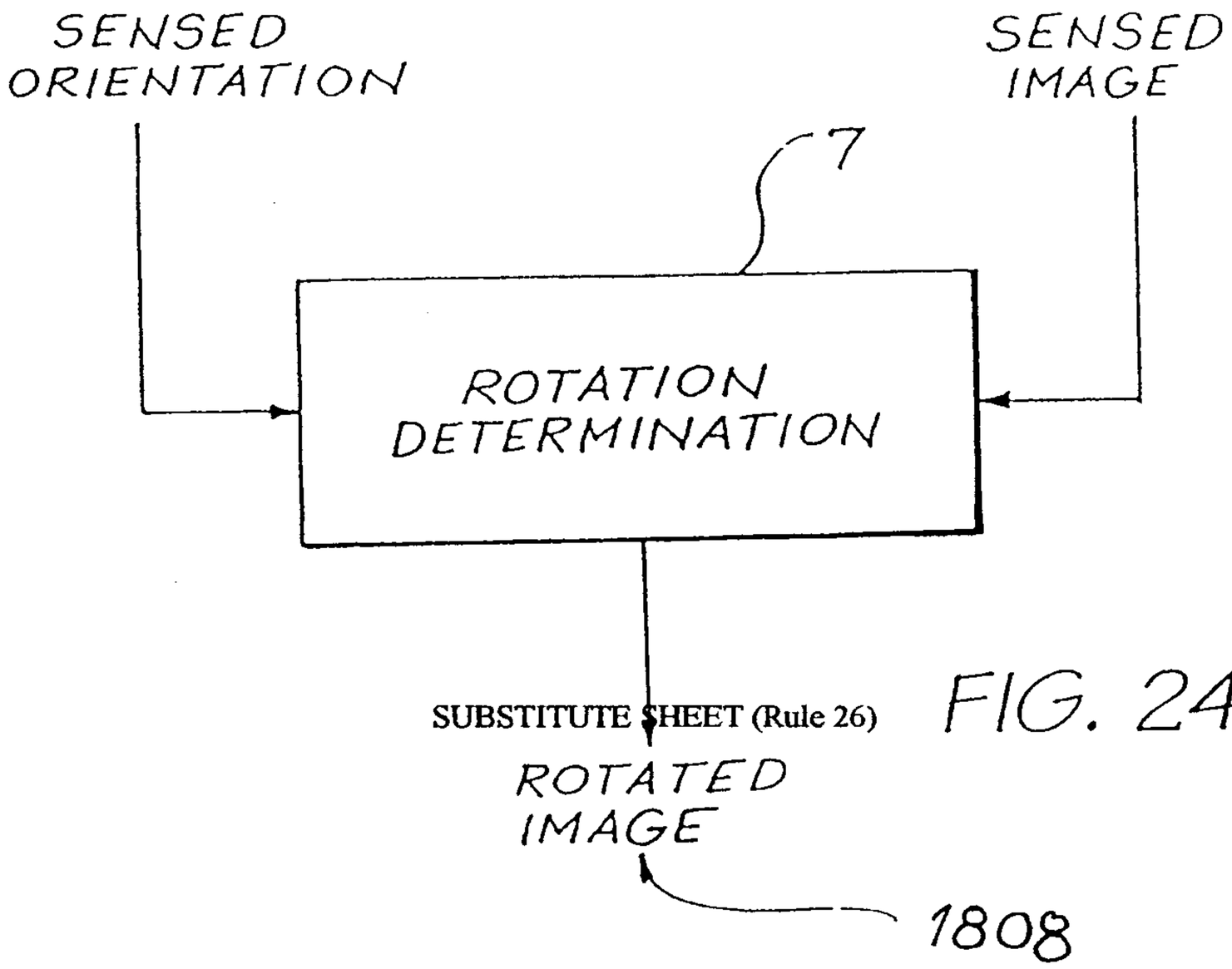

FIG. 240

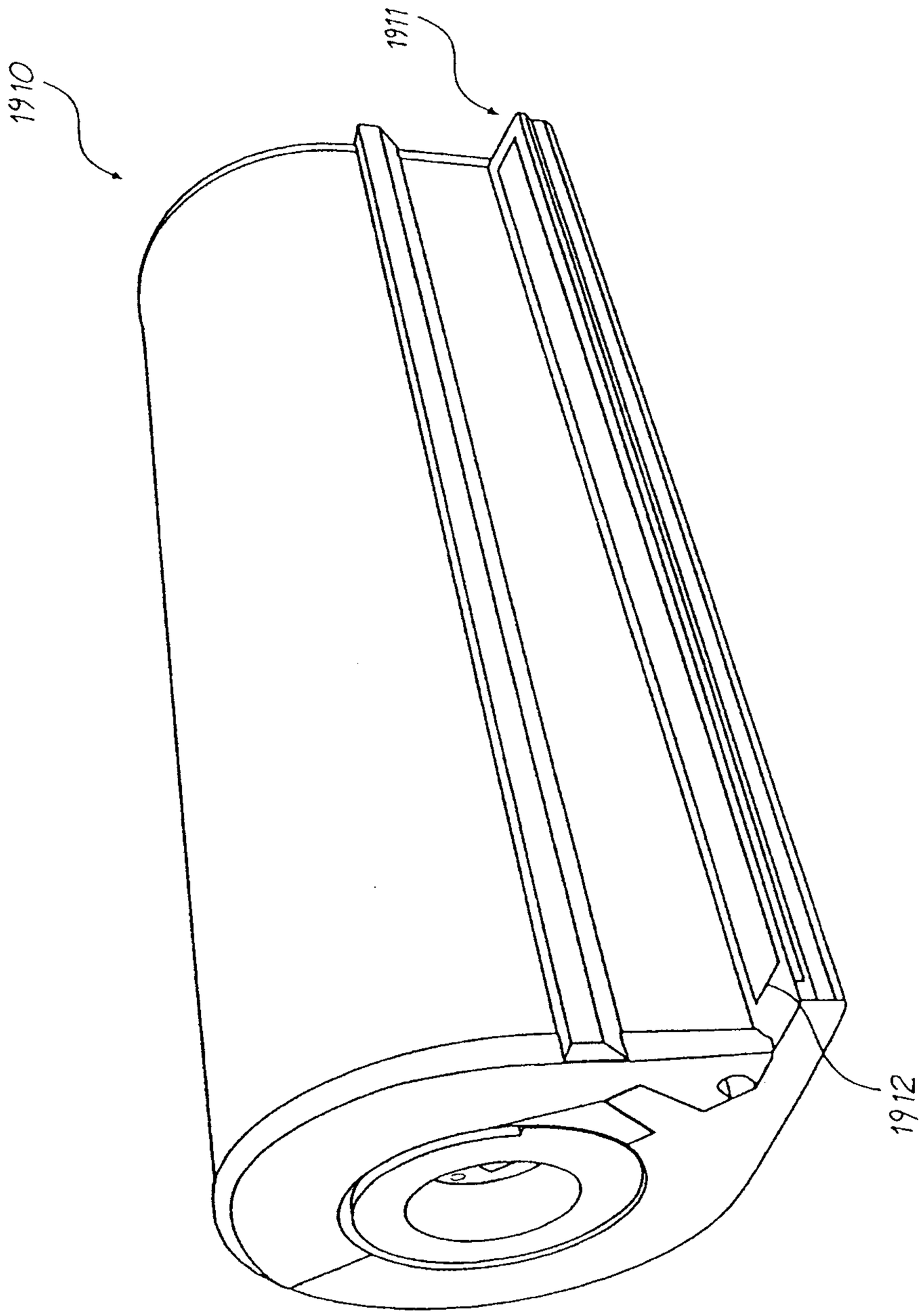

FIG. 241

160 / 246

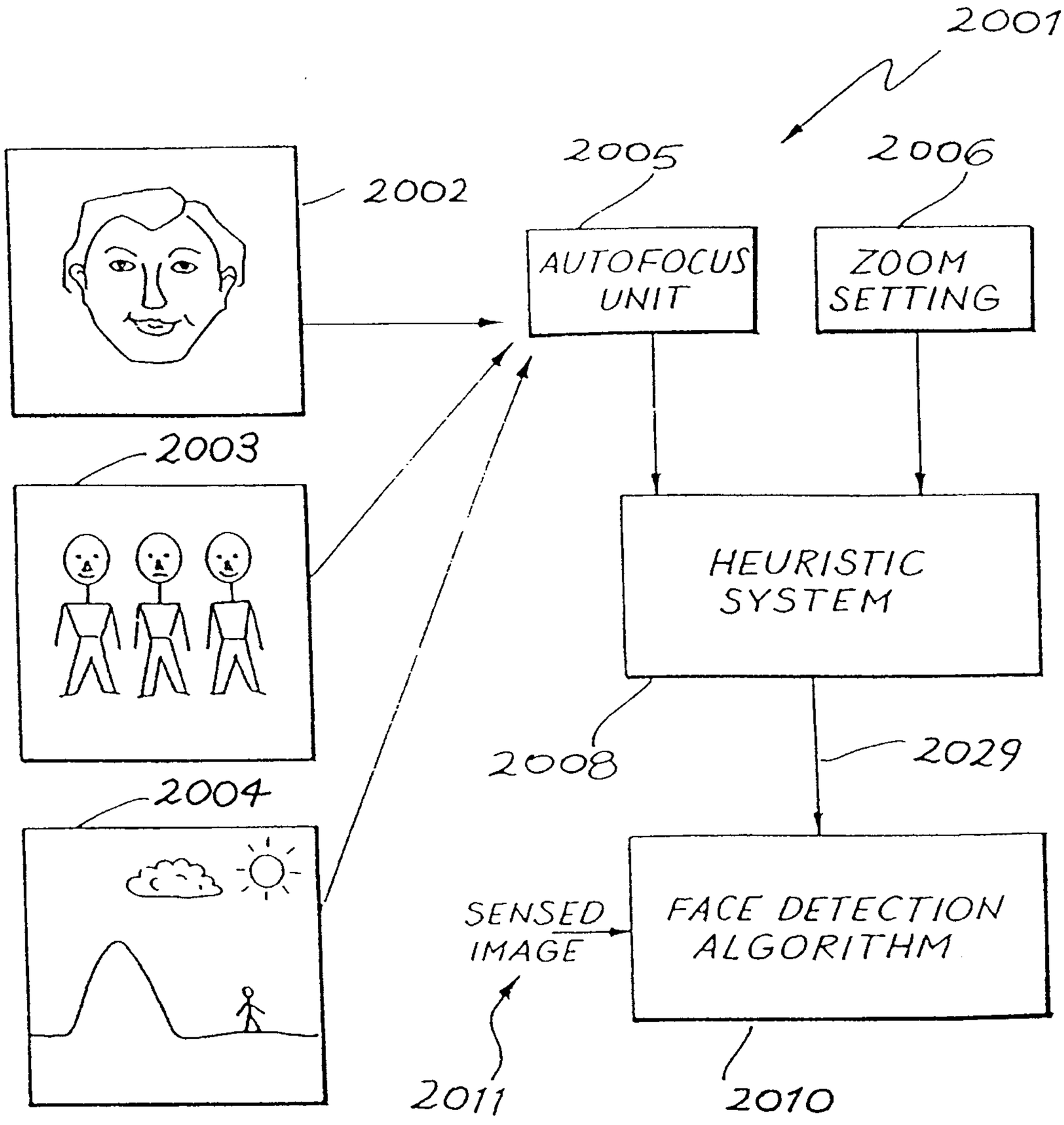

FIG. 242

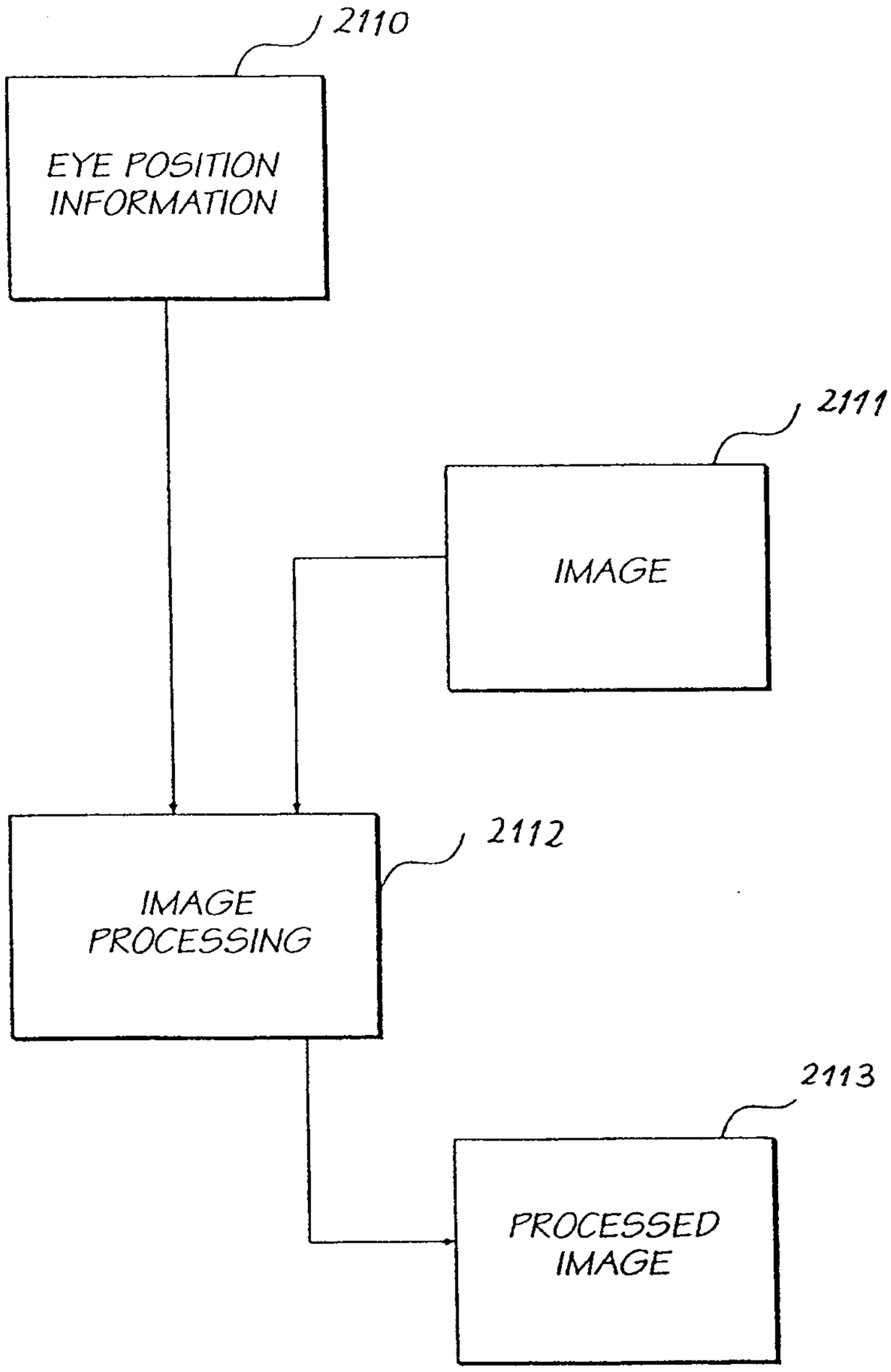
2110
EYE POSITION INFORMATION
2111
IMAGE
2112
IMAGE PROCESSING
2113
PROCESSED IMAGE

FIG. 243

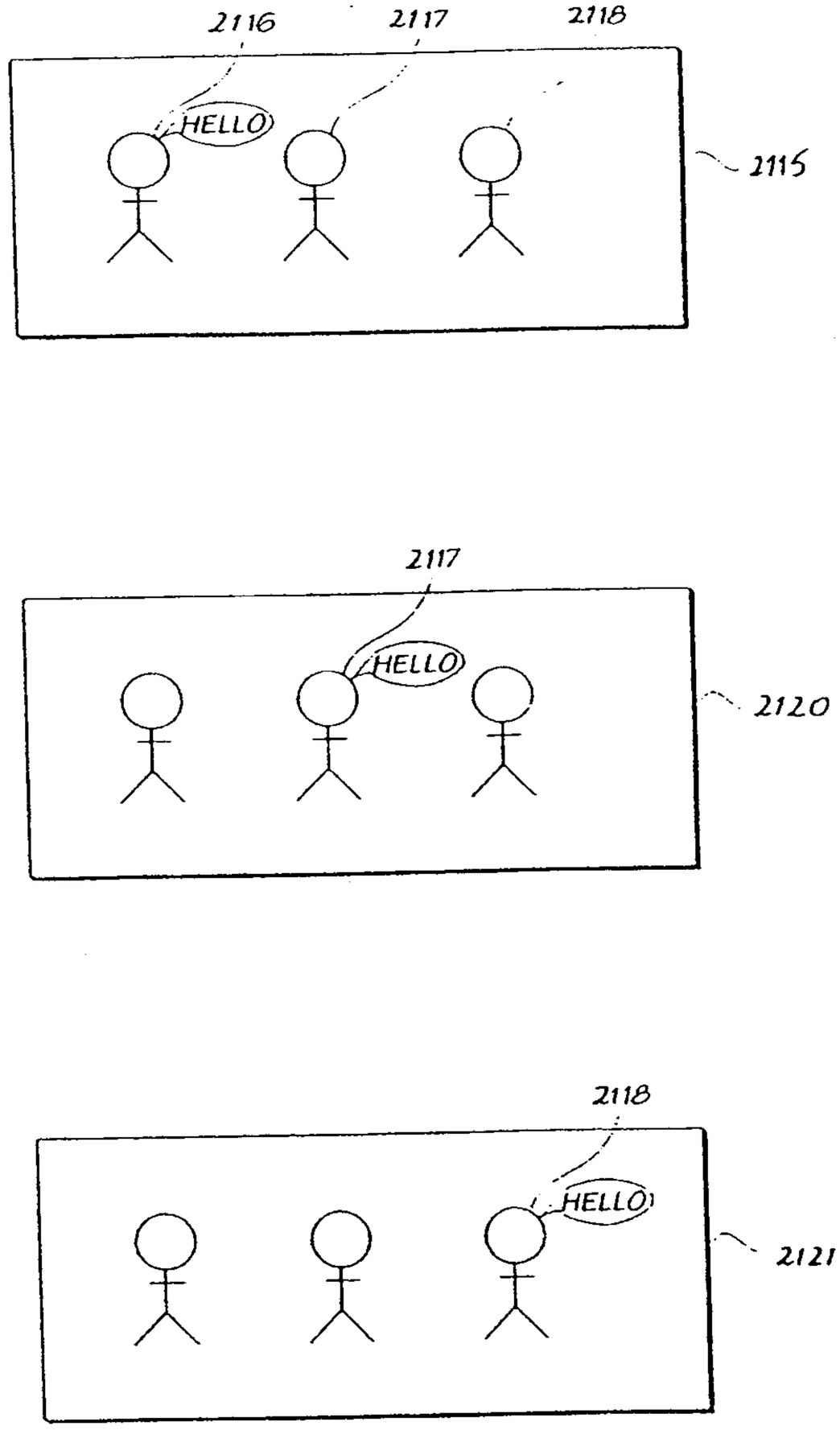

FIG. 244

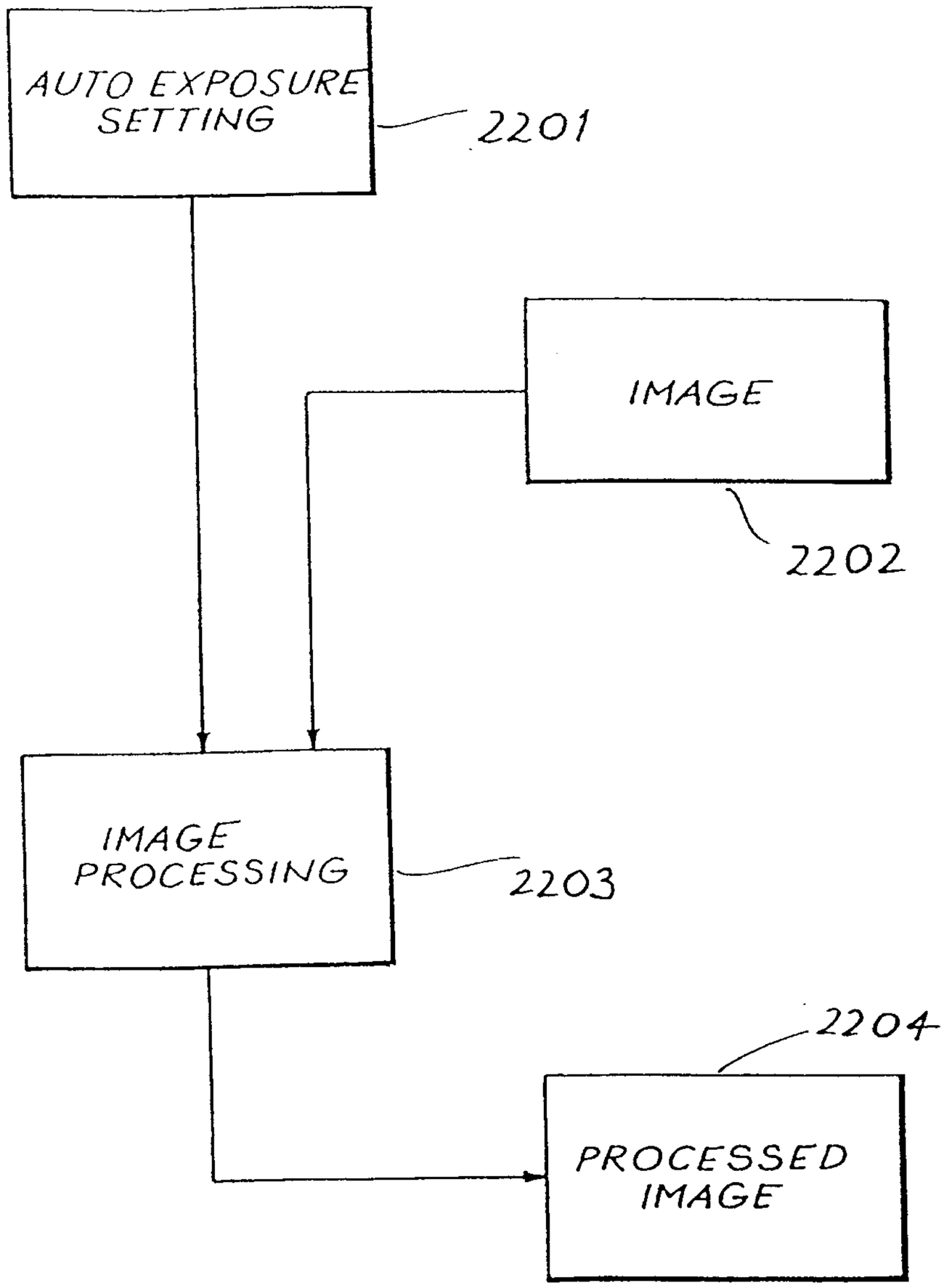
AUTO EXPOSURE SETTING
2201
IMAGE
2202
IMAGE PROCESSING
2203
2204
PROCESSED IMAGE

FIG. 245

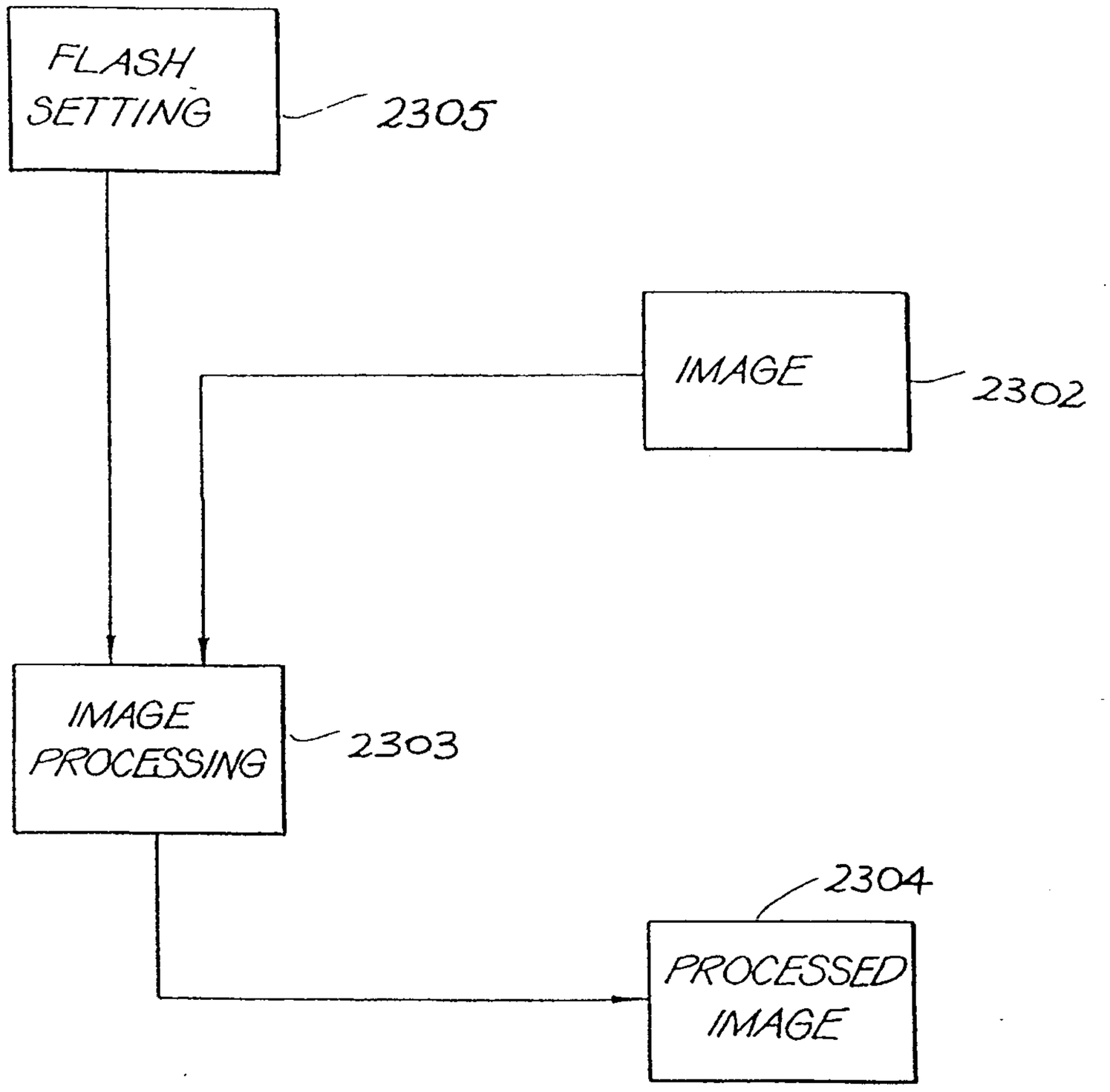
FLASH SETTING
2305
IMAGE
2302
IMAGE PROCESSING
2303
2304
PROCESSED IMAGE

FIG. 246

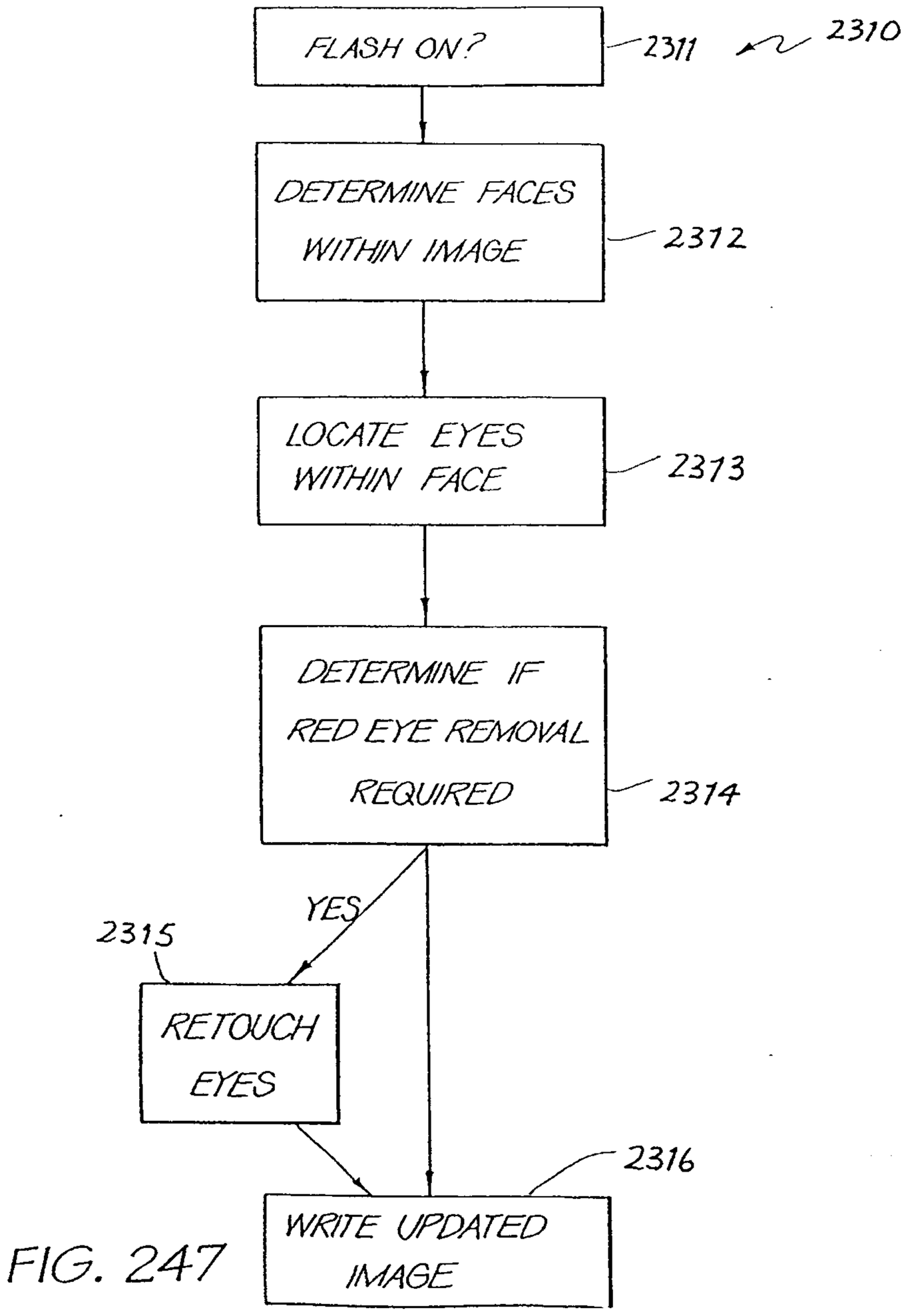
FLASH ON?
2311
2310
DETERMINE FACES WITHIN IMAGE
2312
LOCATE EYES WITHIN FACE
2313
DETERMINE IF RED EYE REMOVAL REQUIRED
2314
YES
2315
RETOUCH EYES
2316
WRITE UPDATED IMAGE

FIG. 247

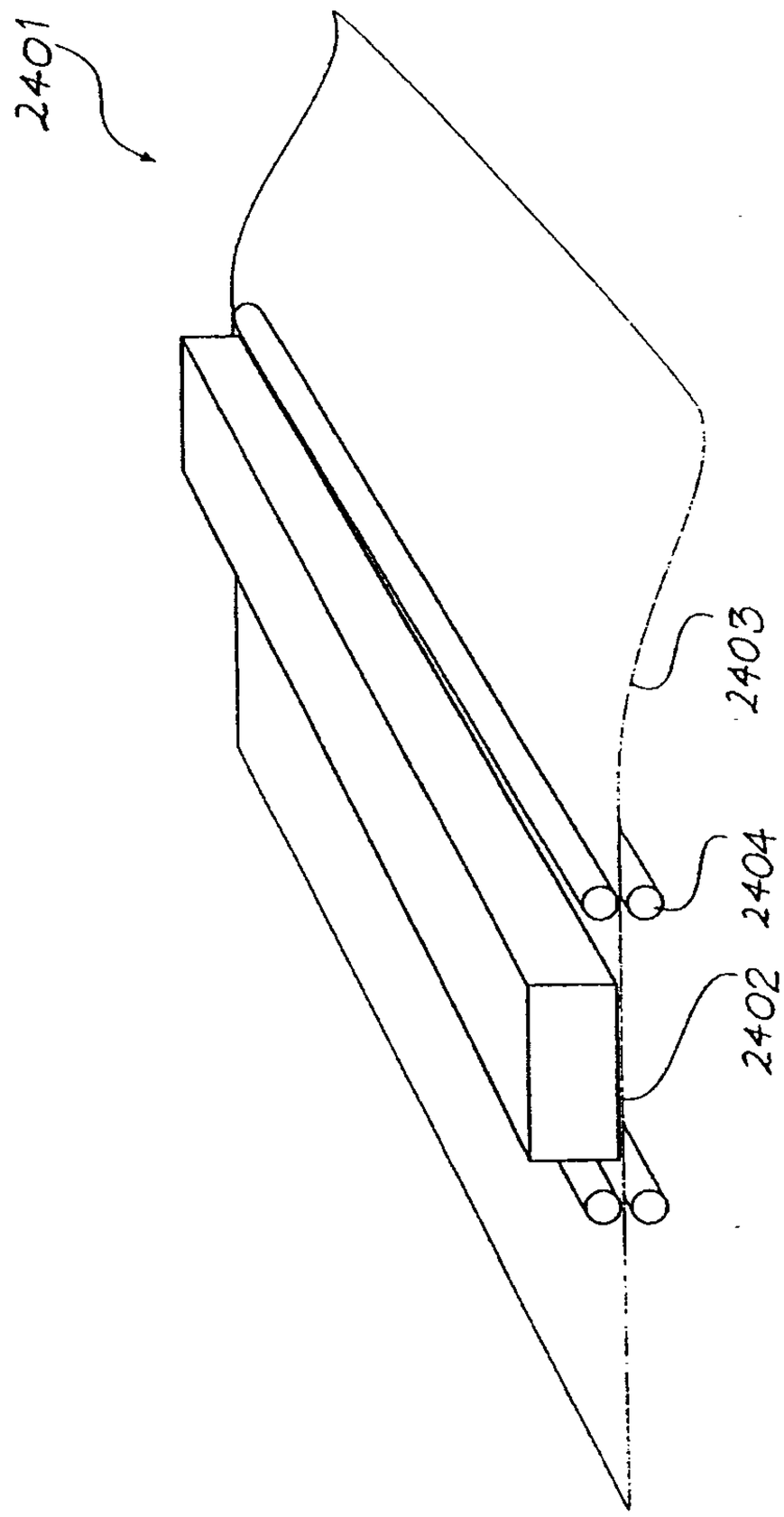

FIG. 248

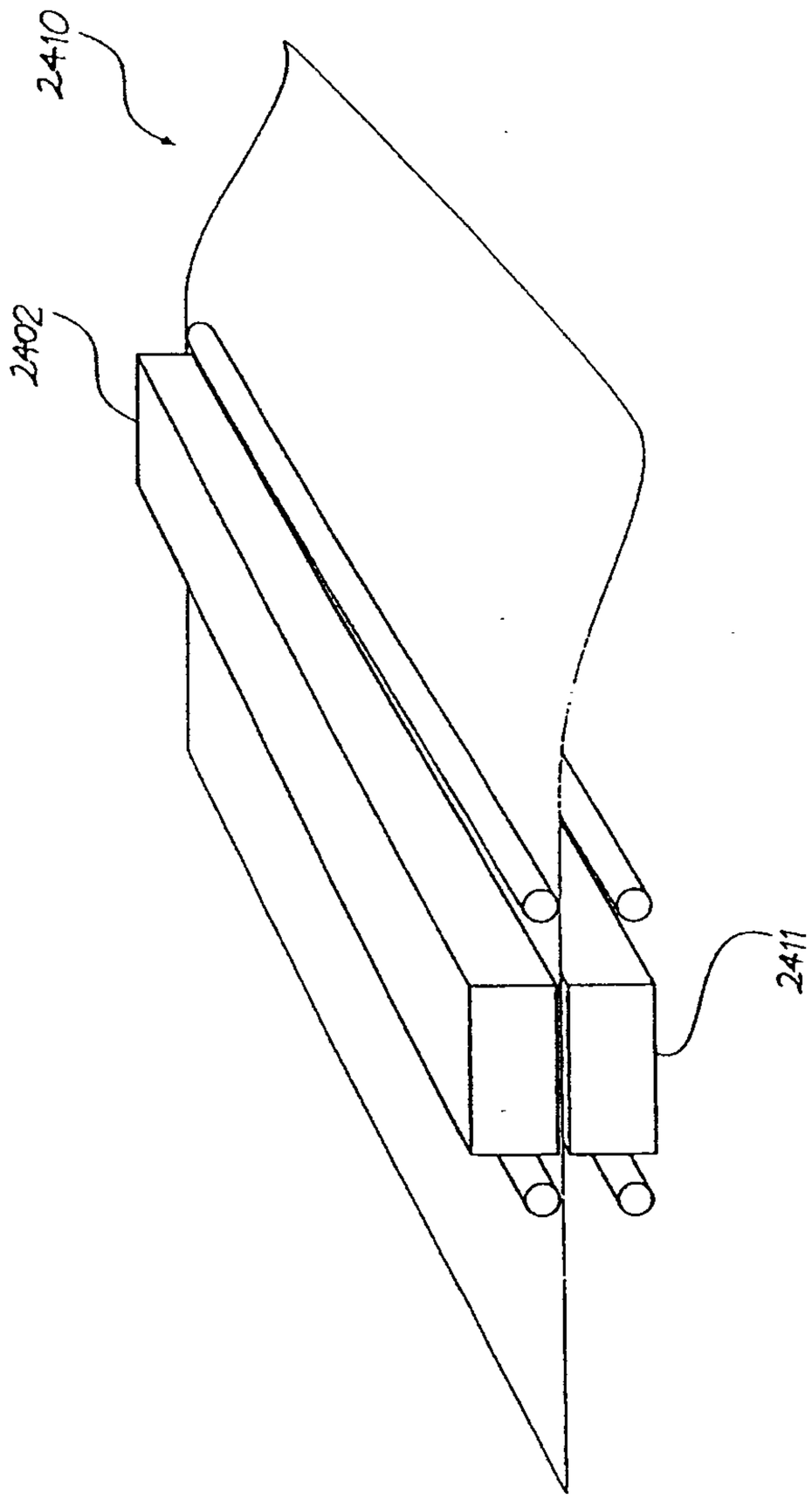

FIG. 249

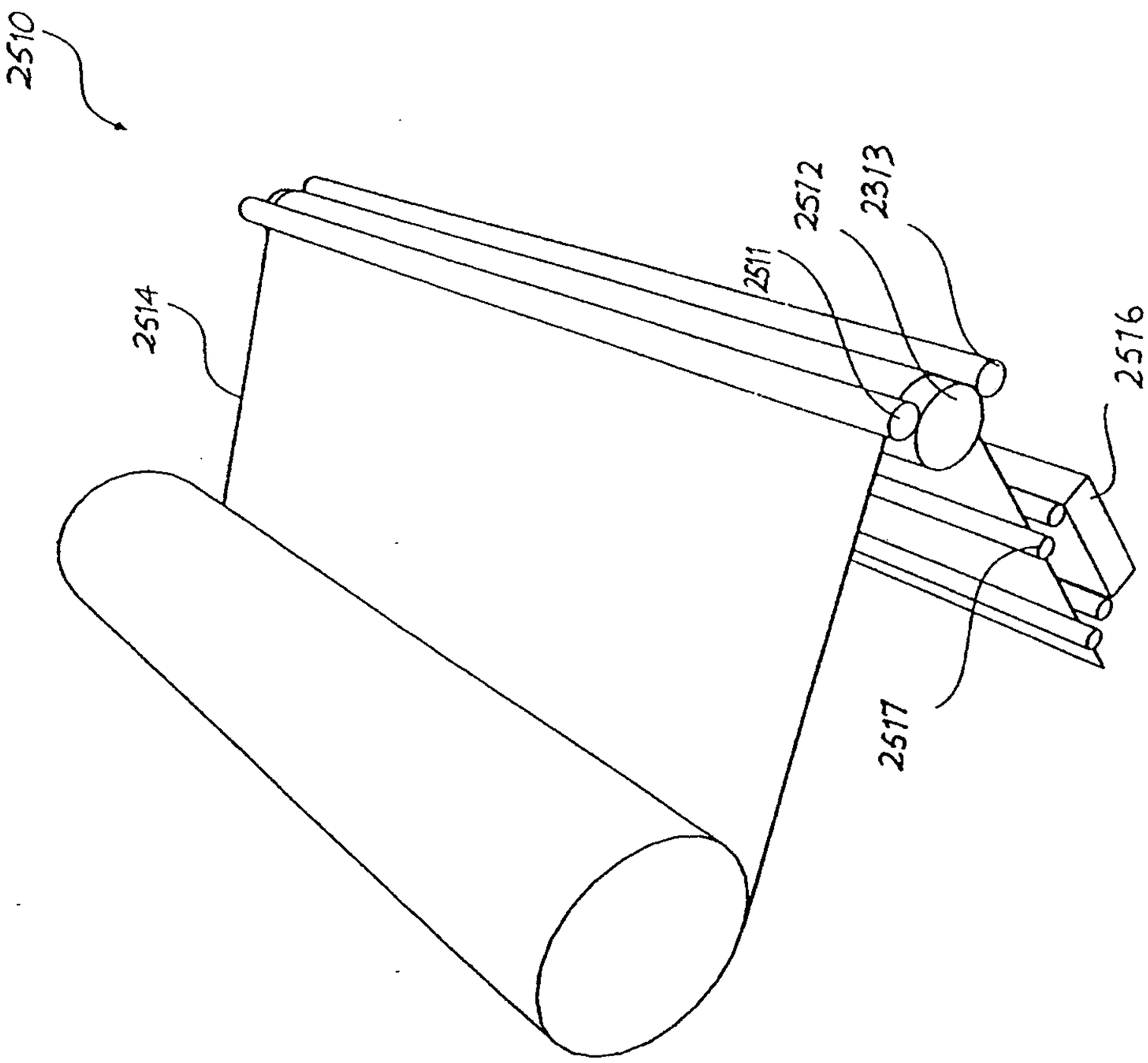

FIG. 250

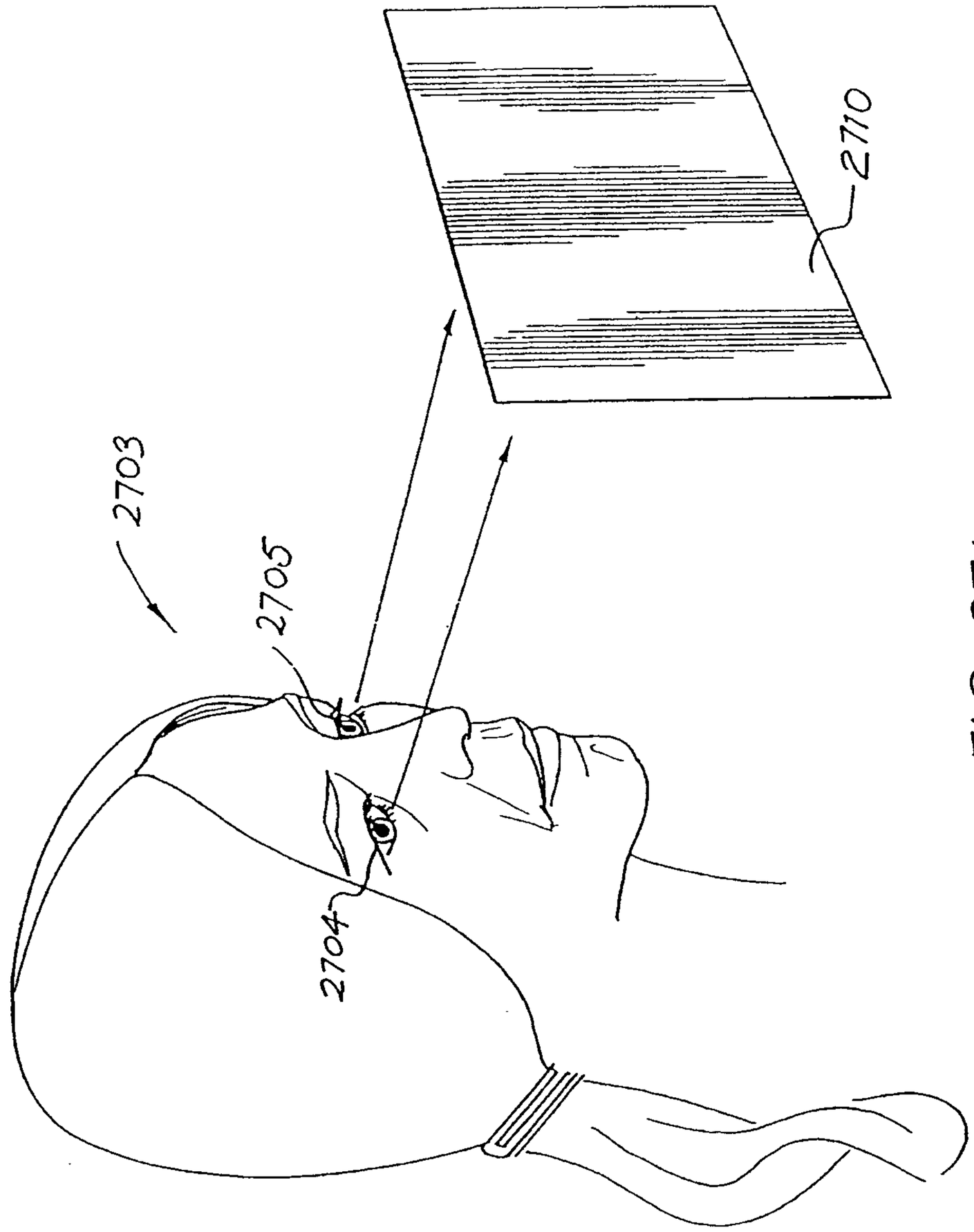

FIG. 251

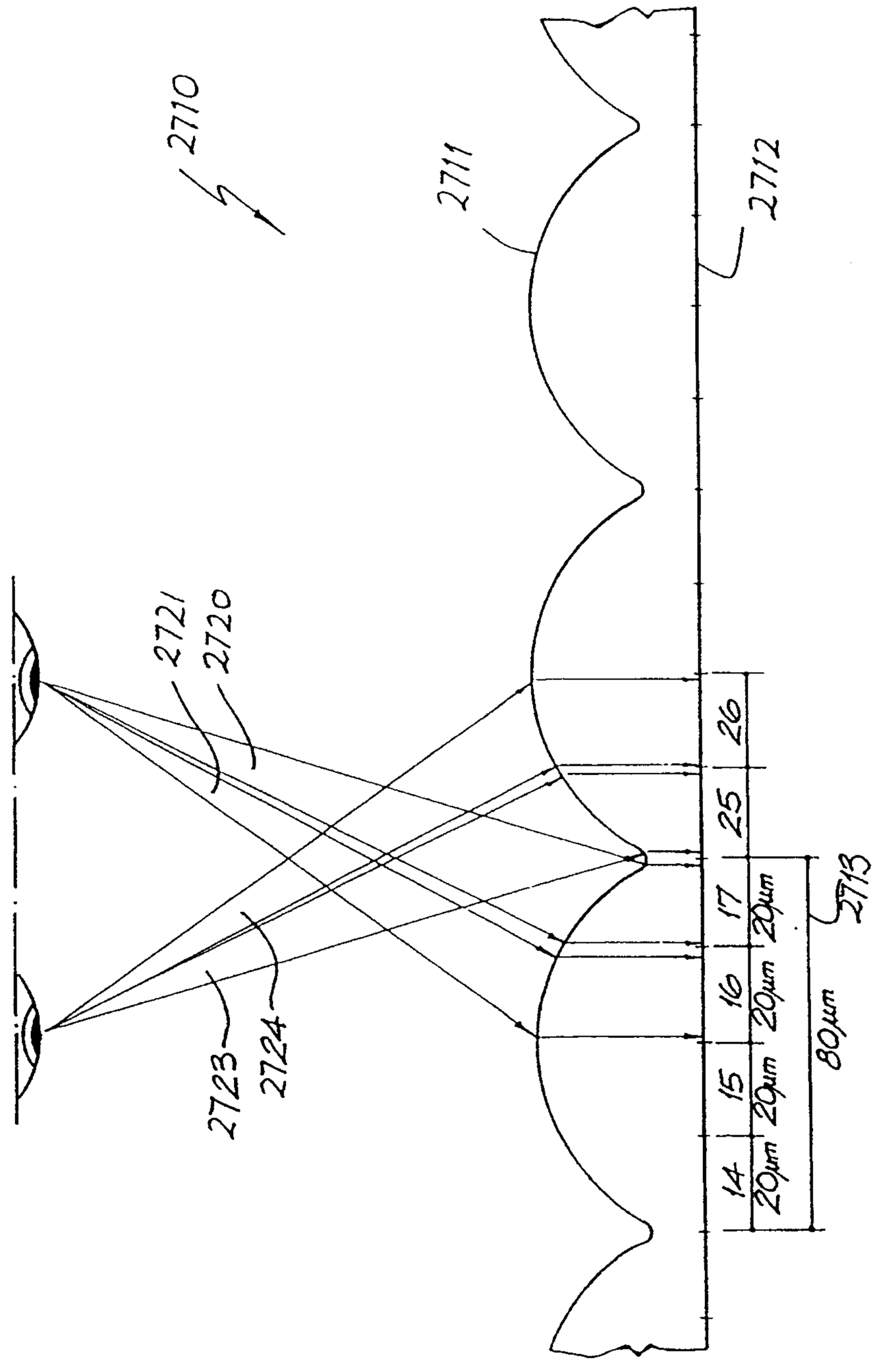
2710
2711
2712
2721
2720
2723
2724
2713
26
25
17
16
15
14
20μm
20μm
20μm
20μm
80μm

FIG. 252

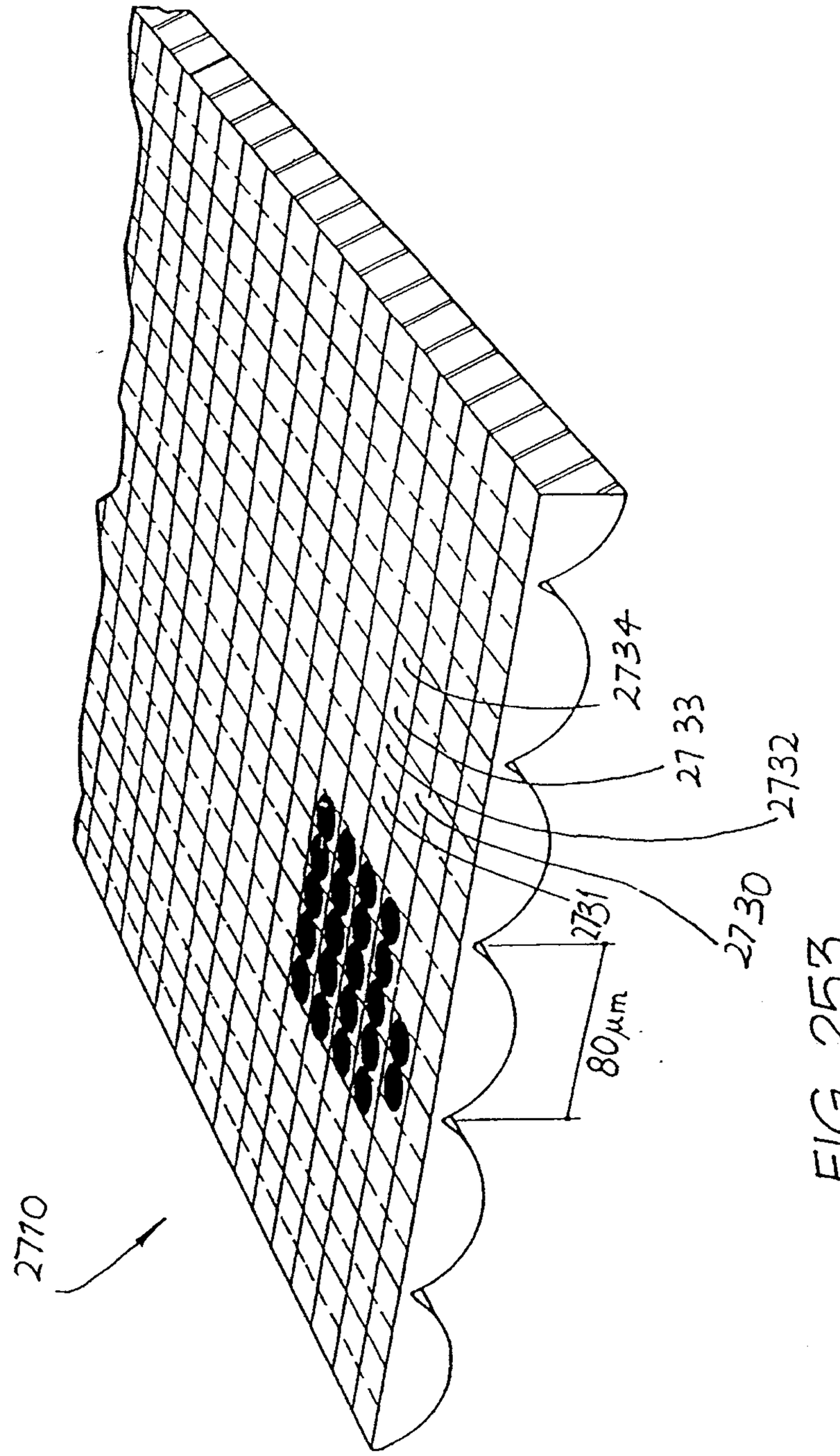

FIG. 253

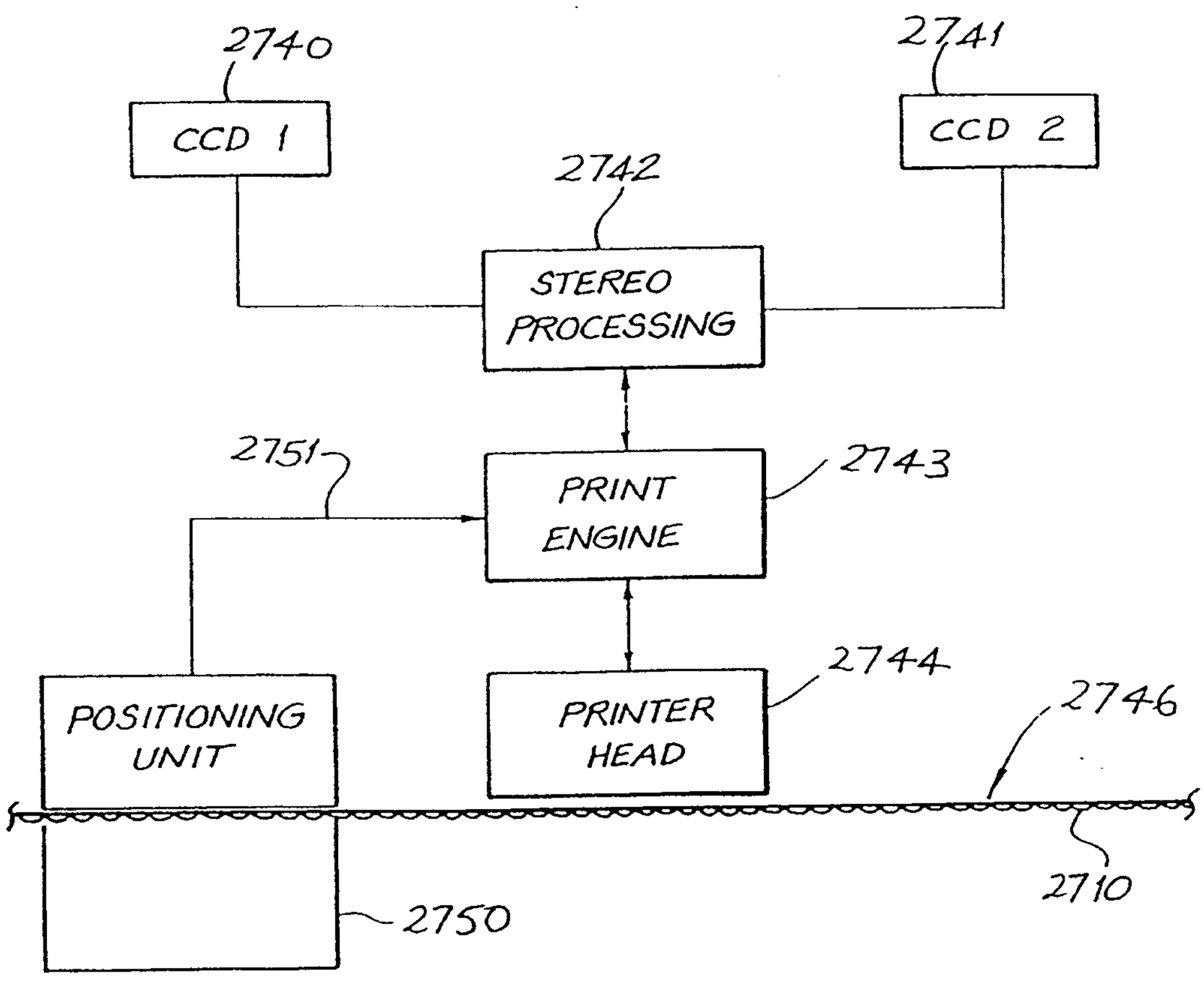
2740
CCD 1
2741
CCD 2
2742
STEREO PROCESSING
2751
PRINT ENGINE
2743
POSITIONING UNIT
2744
PRINTER HEAD
2746
2710
2750

FIG. 254

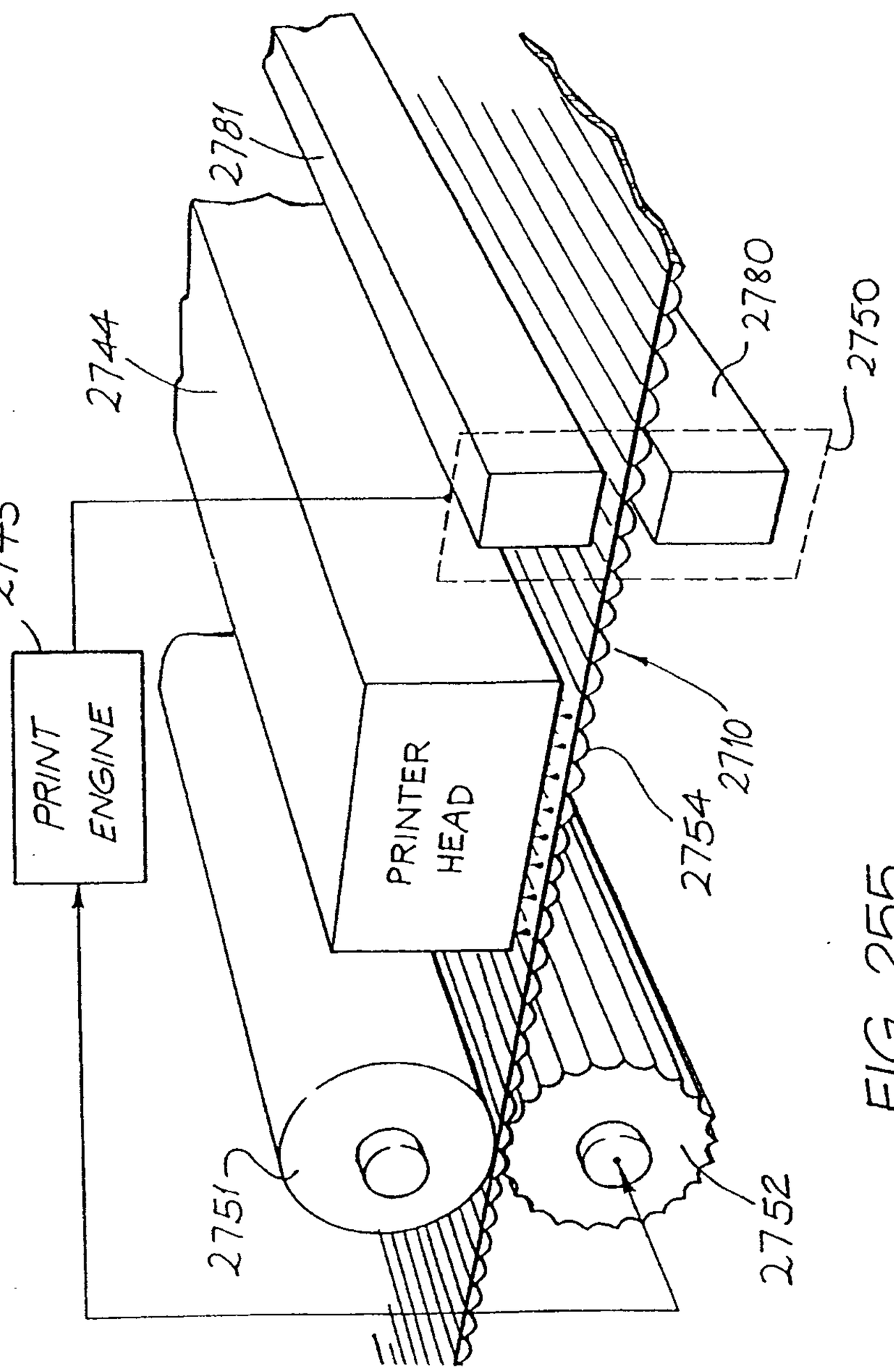
2781
2744
2743
2780
2750
PRINT ENGINE
PRINTER HEAD
2754
2710
2751
2752

FIG. 255

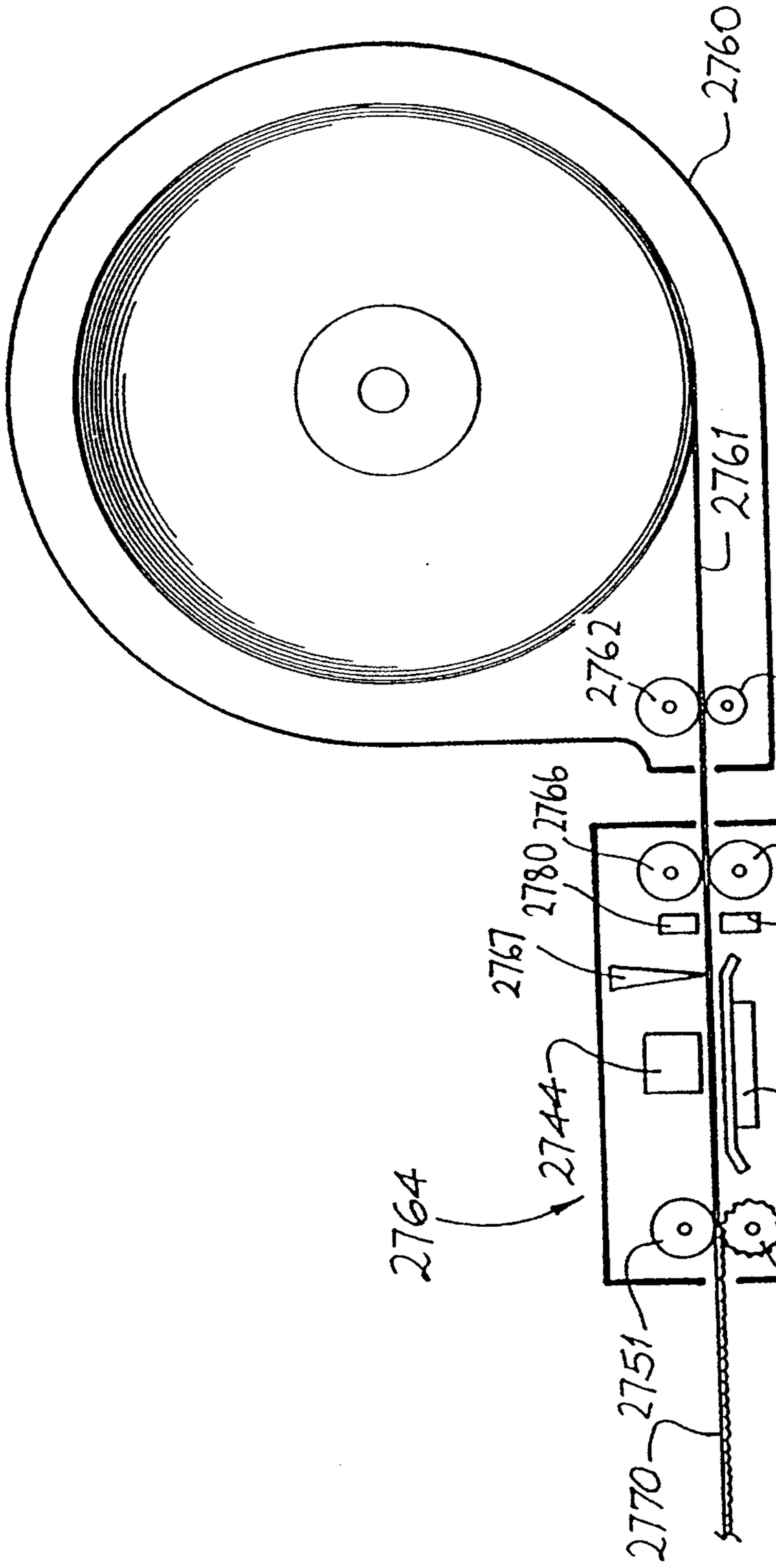
2760
2761
2762
2763
2766
2765
2767
2780
2781
2744
2764
2769
2752
2751
2770
2776

FIG. 256

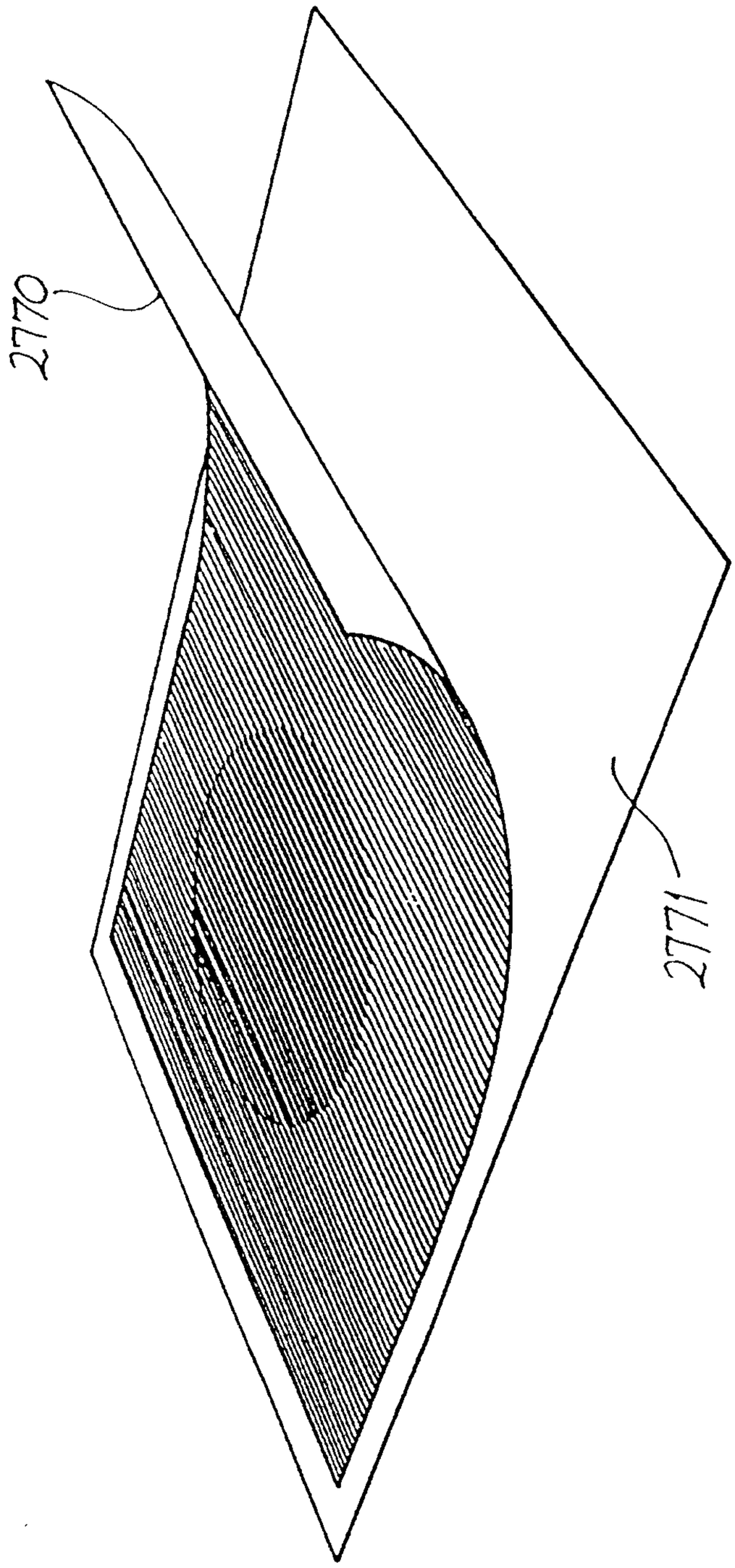

FIG. 25

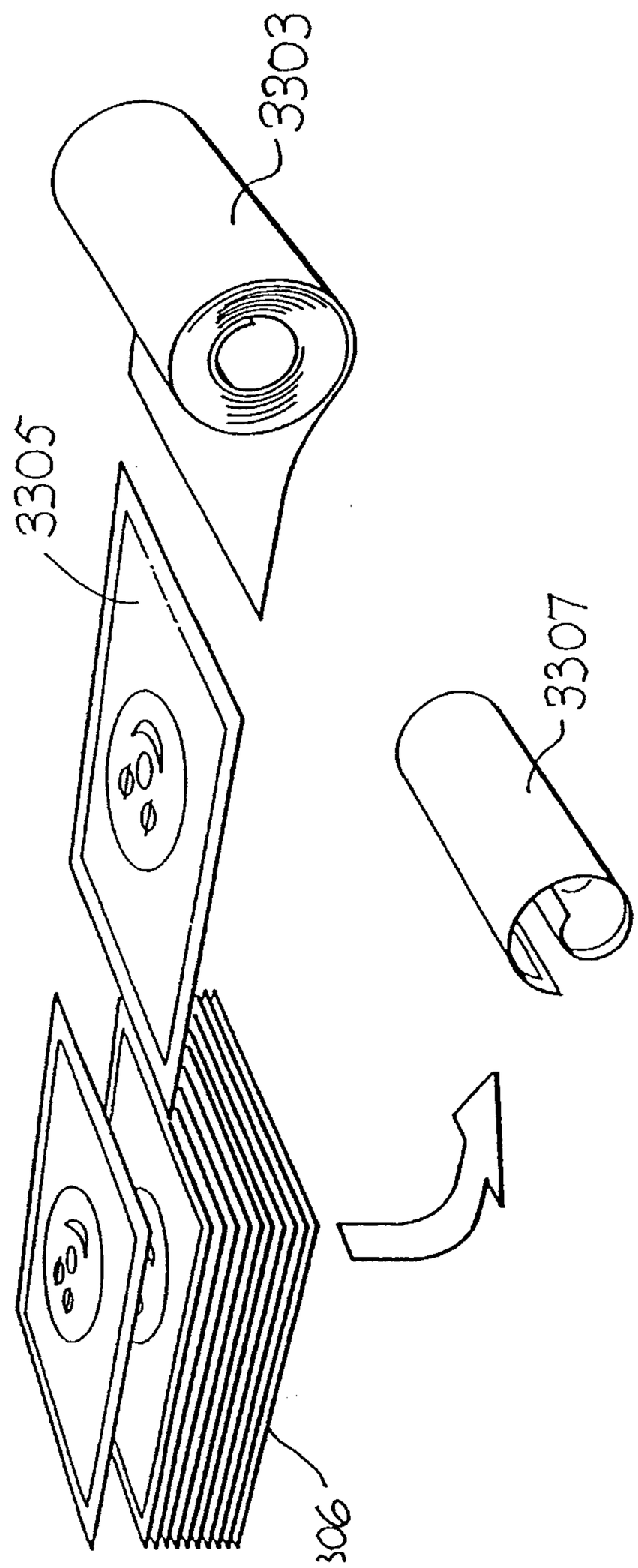

FIG. 258

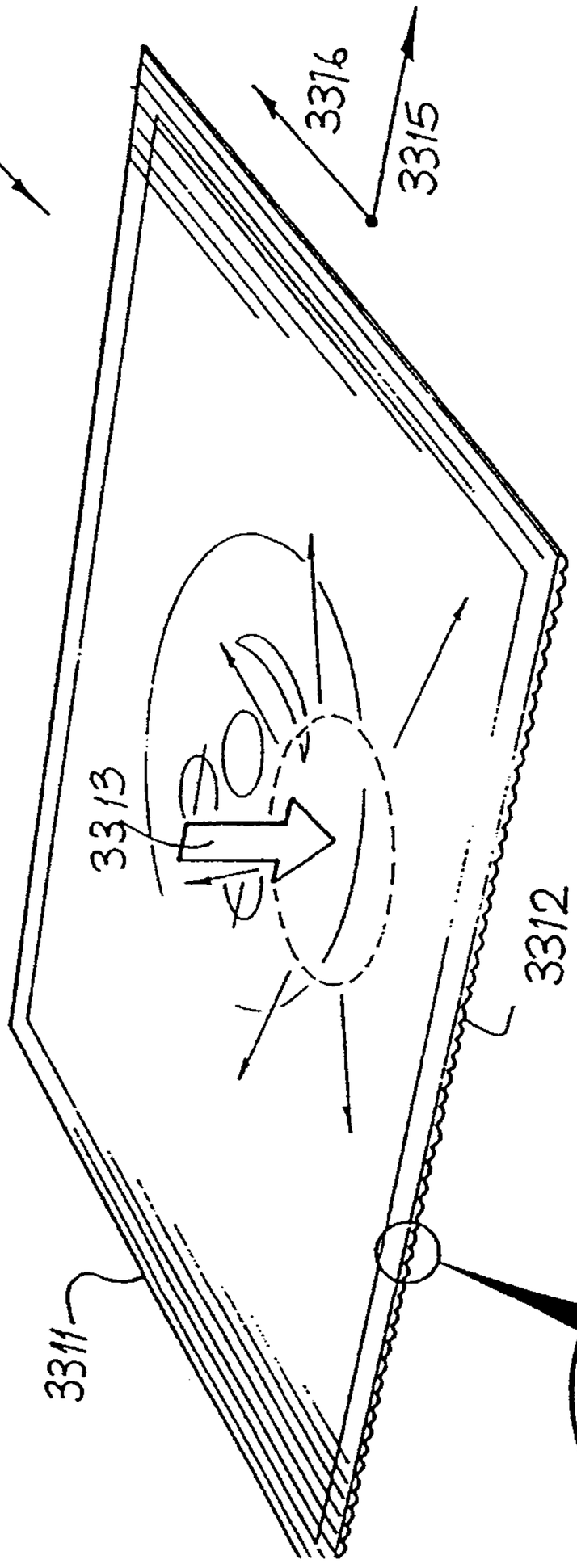

FIG. 259

FIG. 259(a)

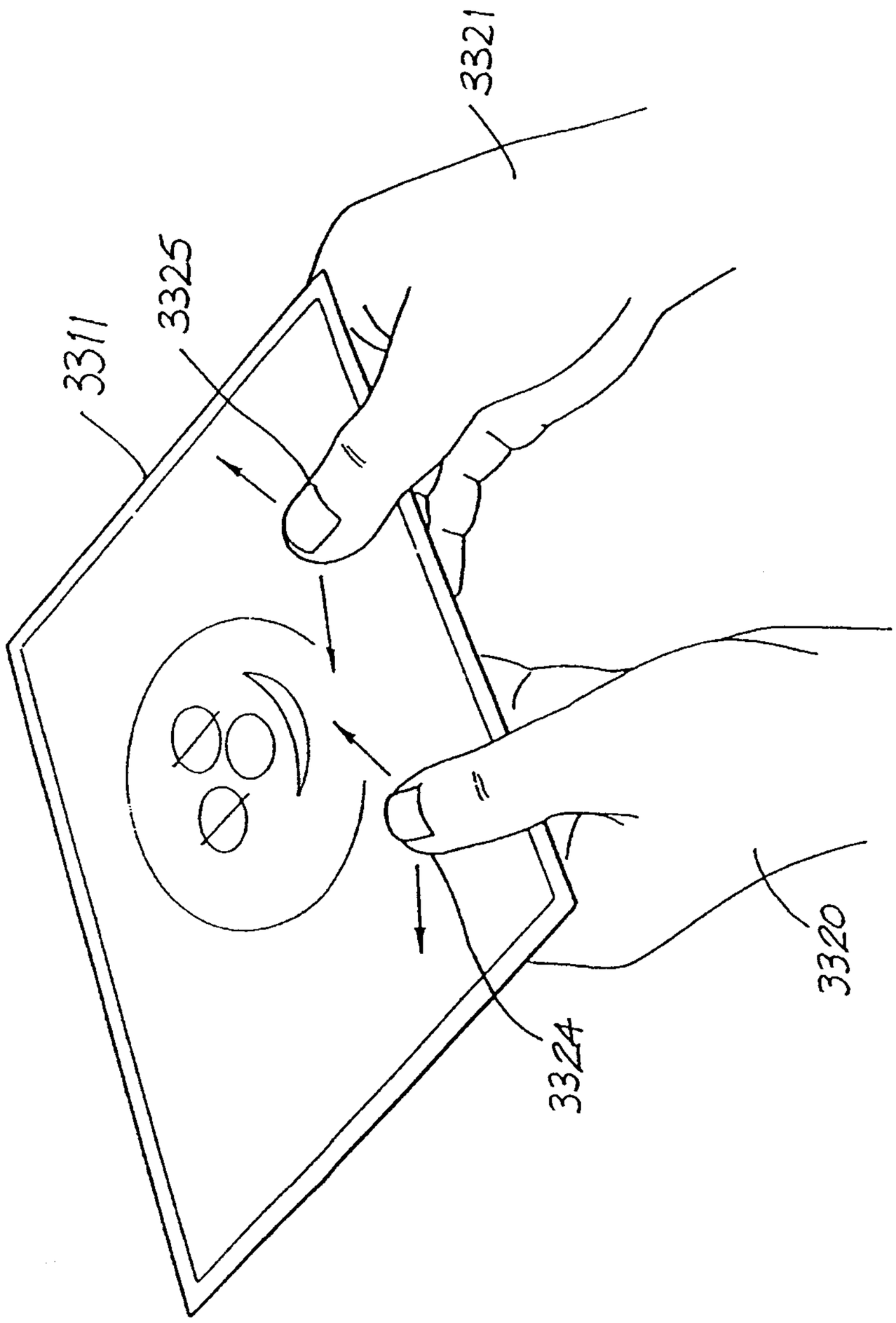

FIG. 260

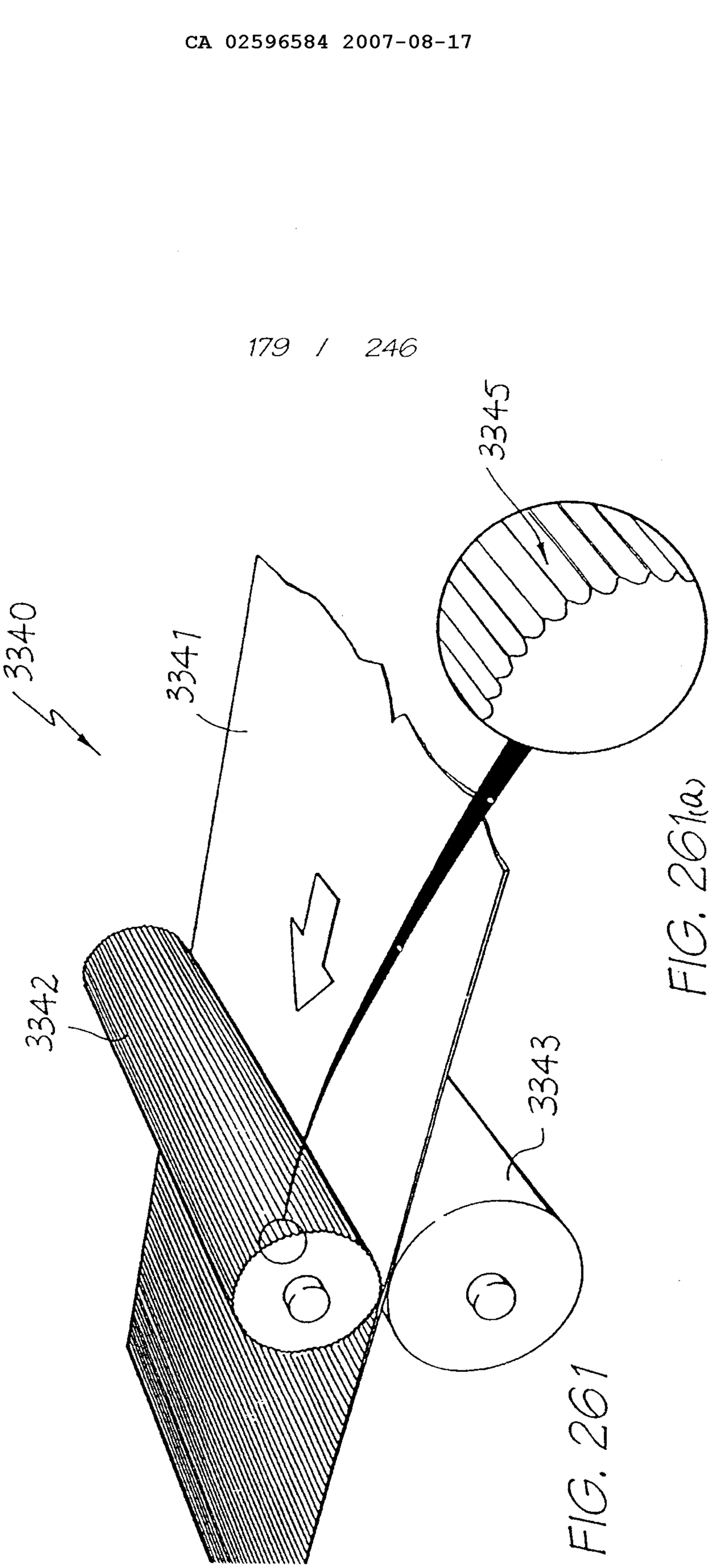

FIG. 261

FIG. 261(a)

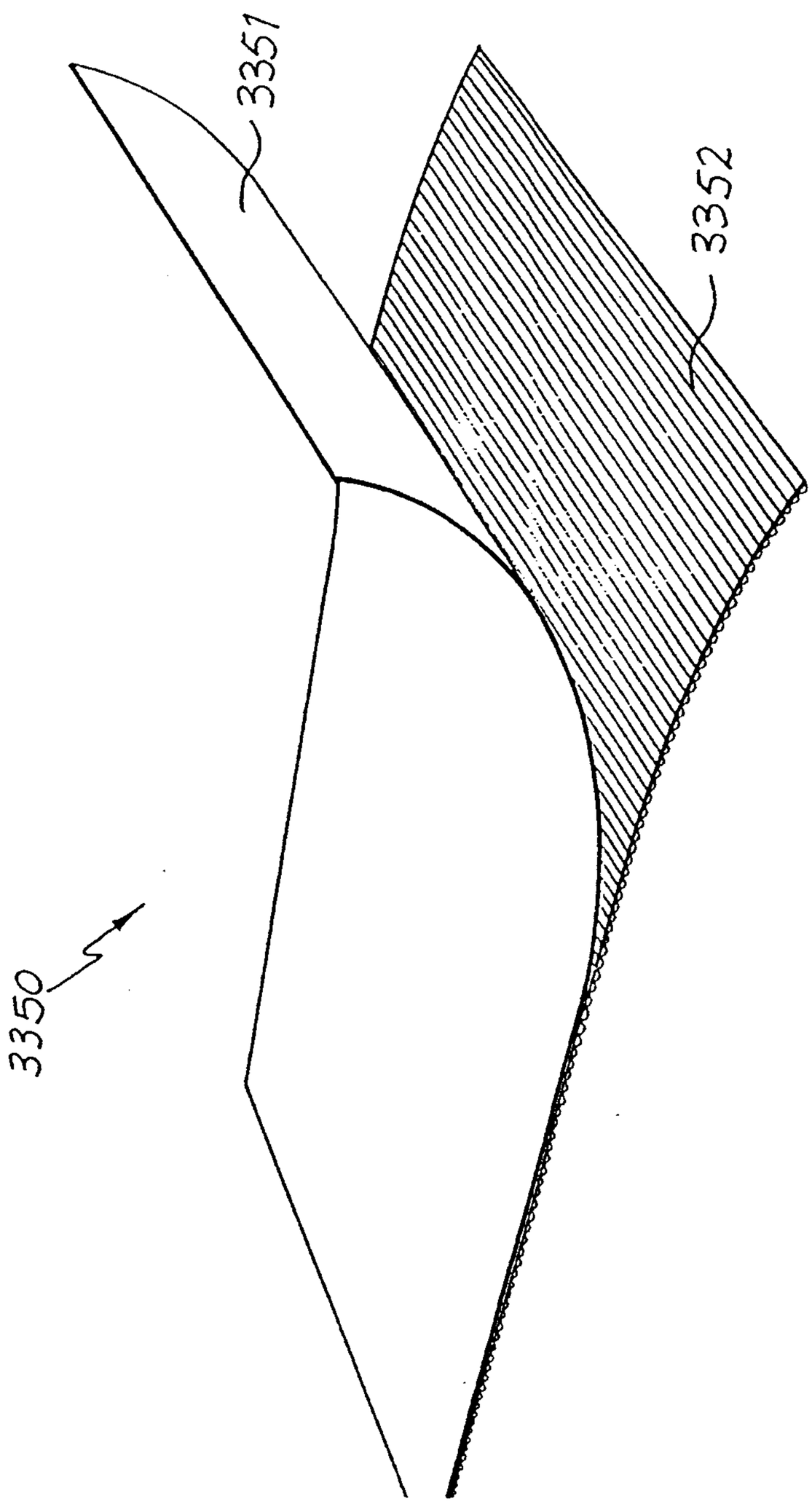

FIG. 262

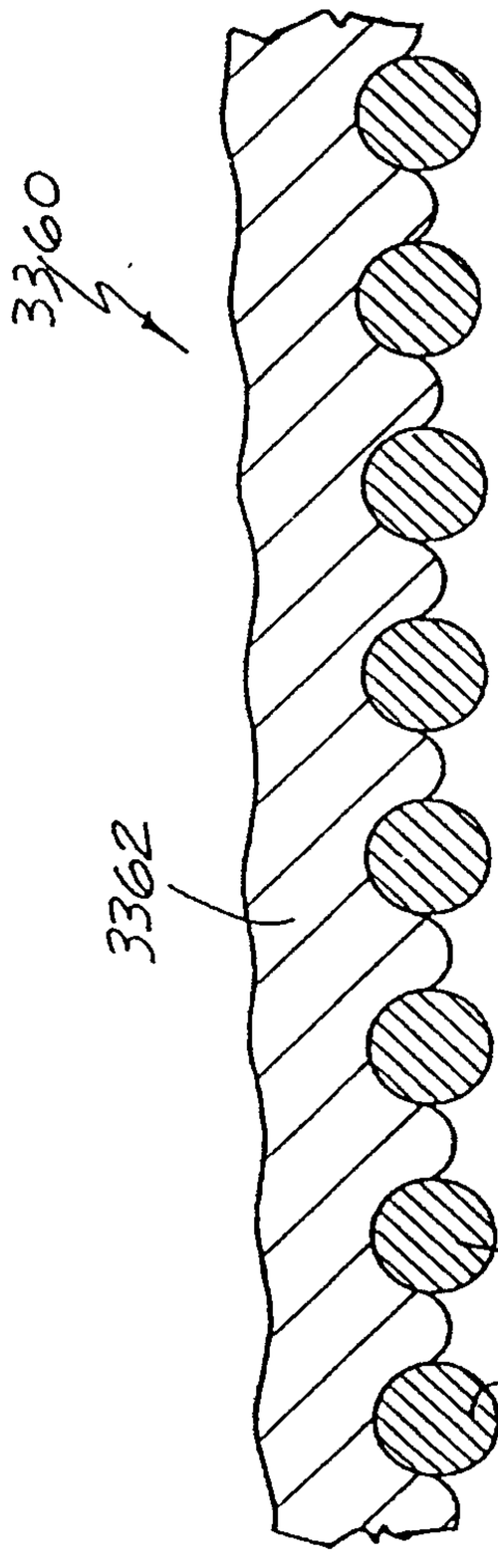

FIG. 263

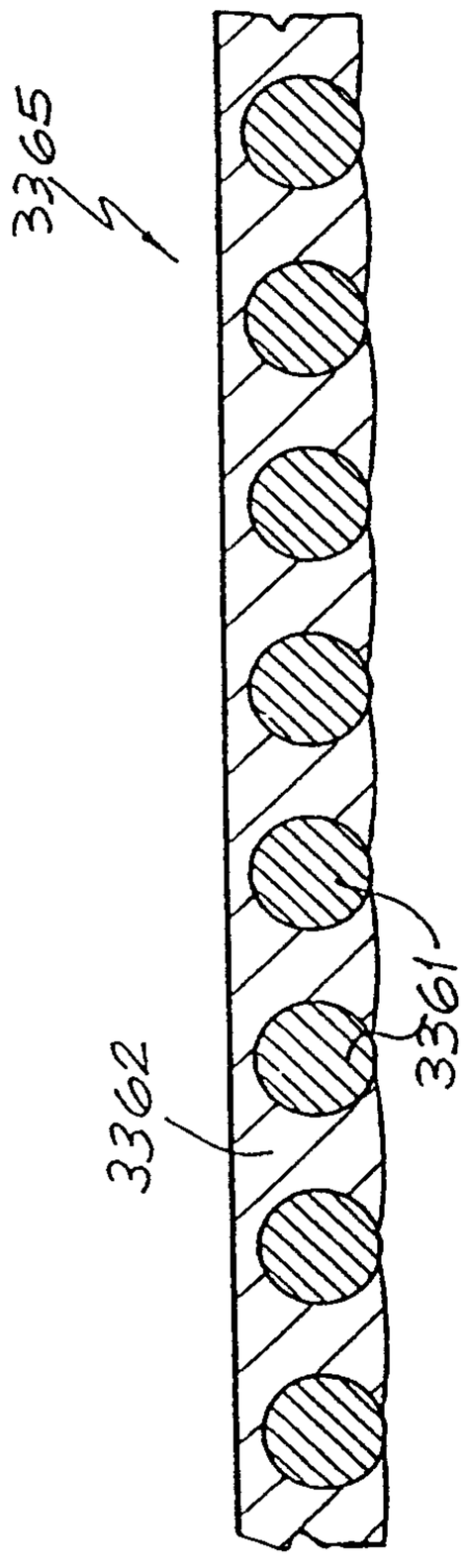

FIG. 264

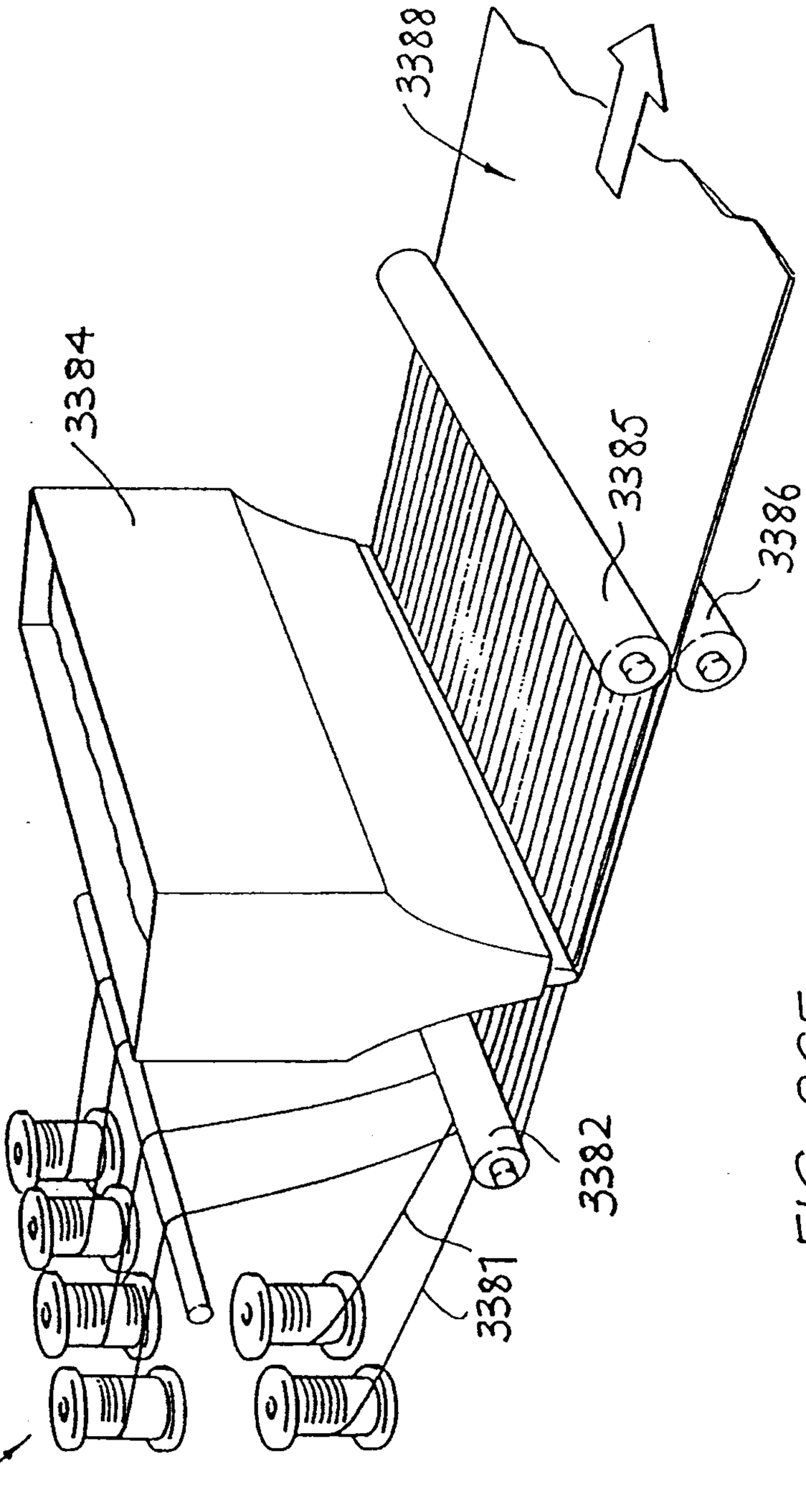

FIG. 265

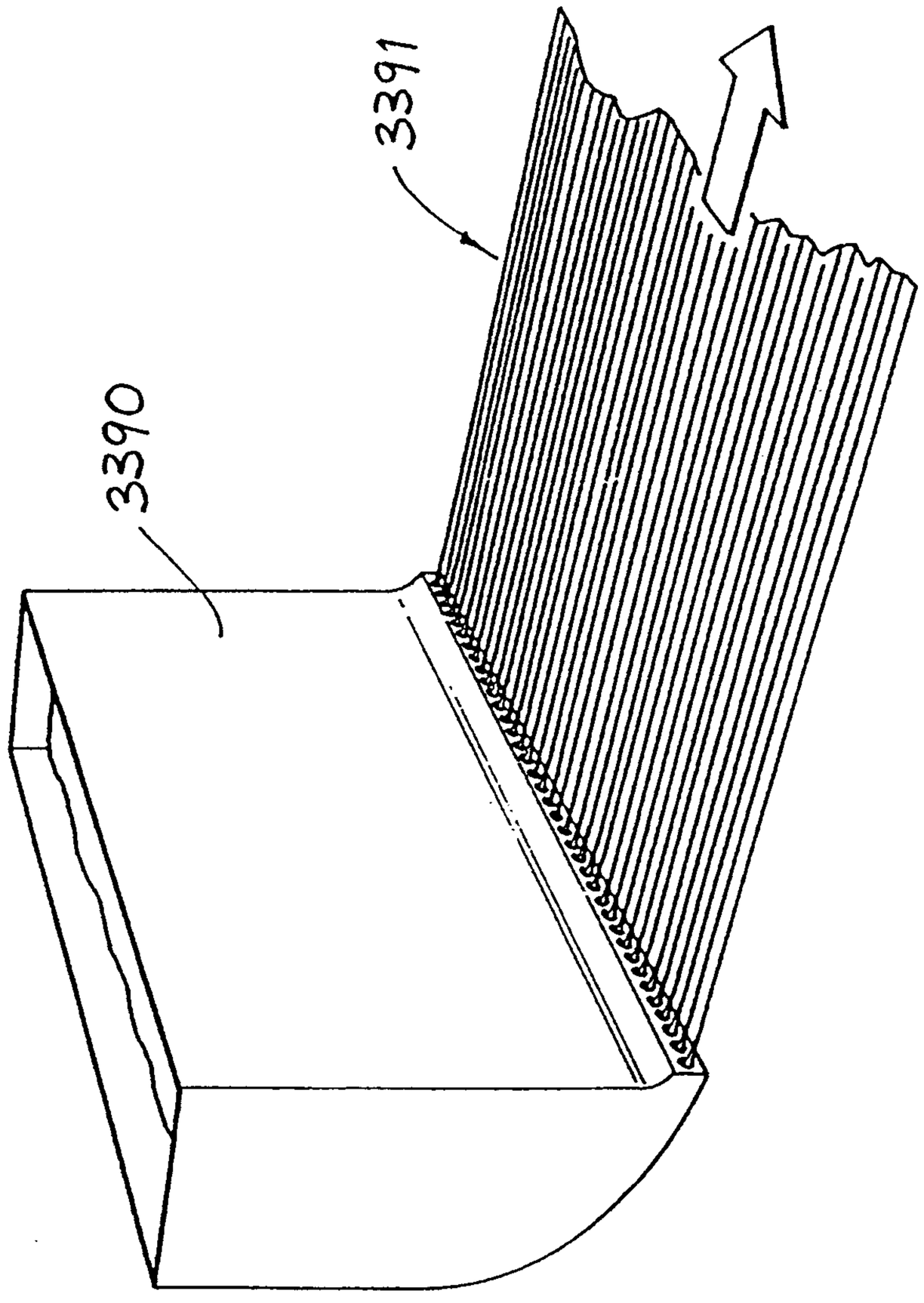

FIG. 266

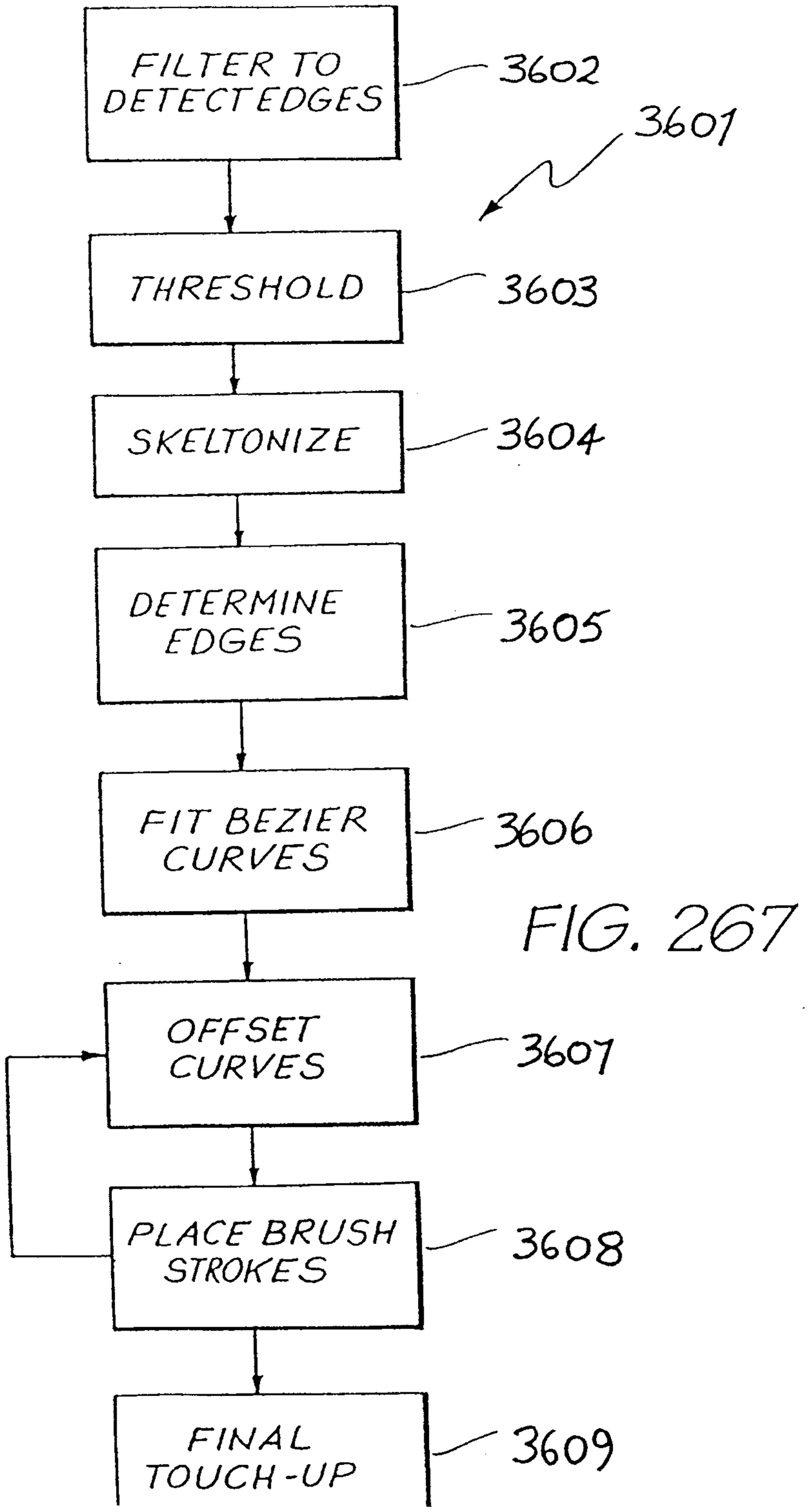
FILTER TO DETECT EDGES
3602
3601
THRESHOLD
3603
SKELTONIZE
3604
DETERMINE EDGES
3605
FIT BEZIER CURVES
3606
OFFSET CURVES
3607
PLACE BRUSH STROKES
3608
FINAL TOUCH-UP
3609

FIG. 267

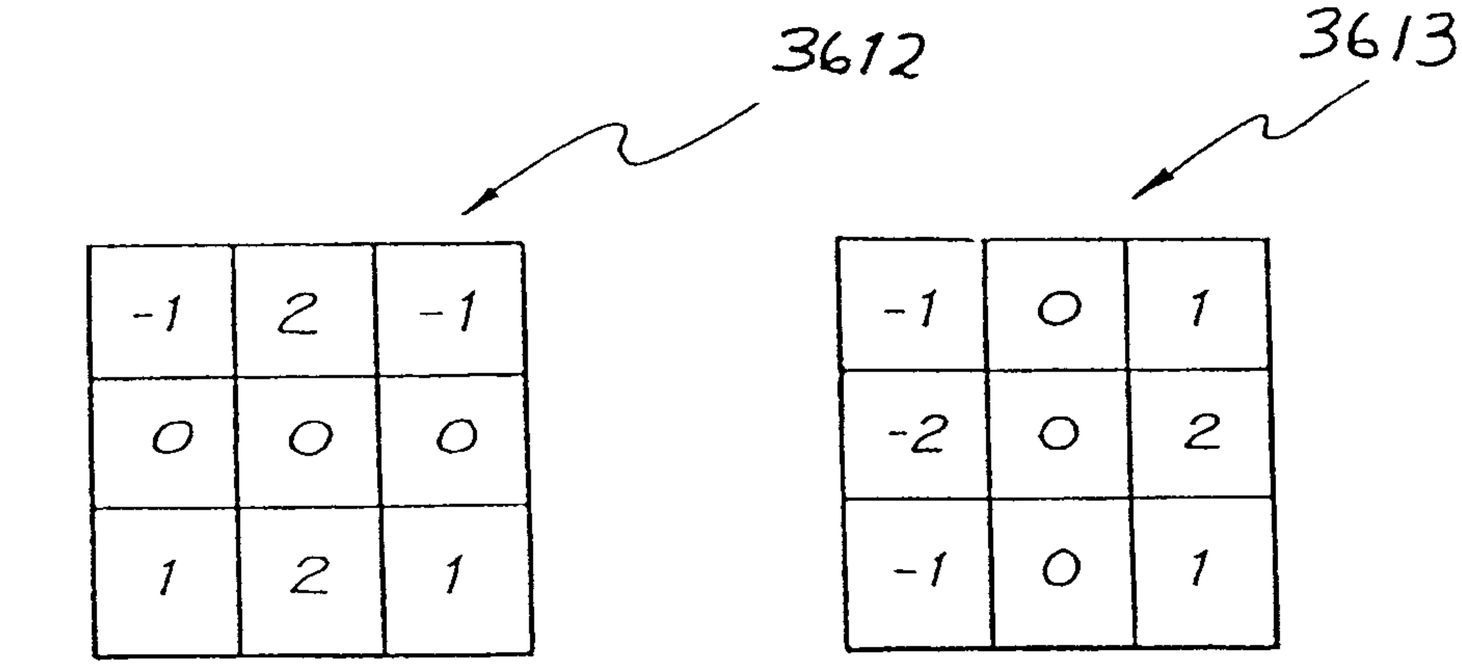

FIG. 268

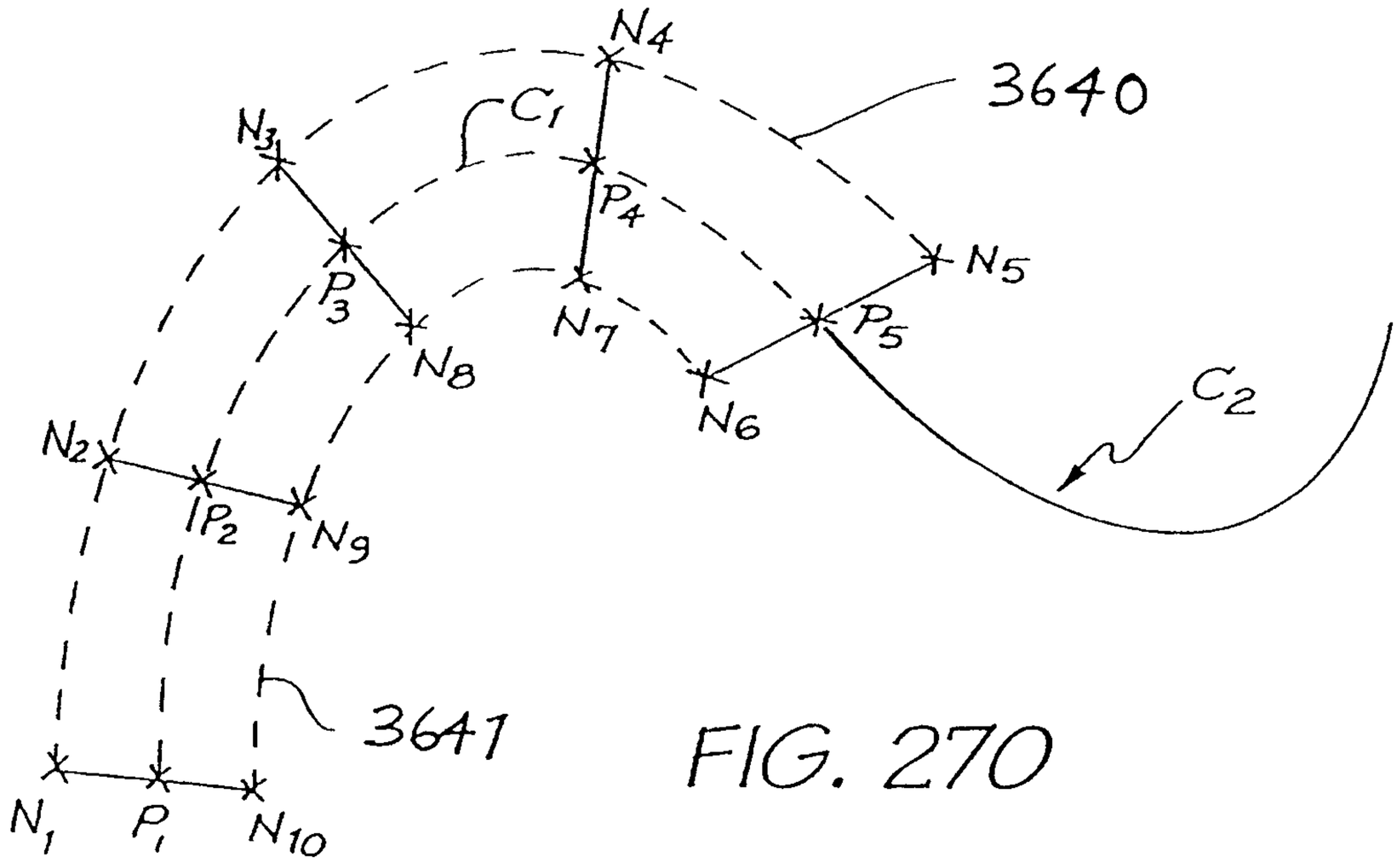

FIG. 270

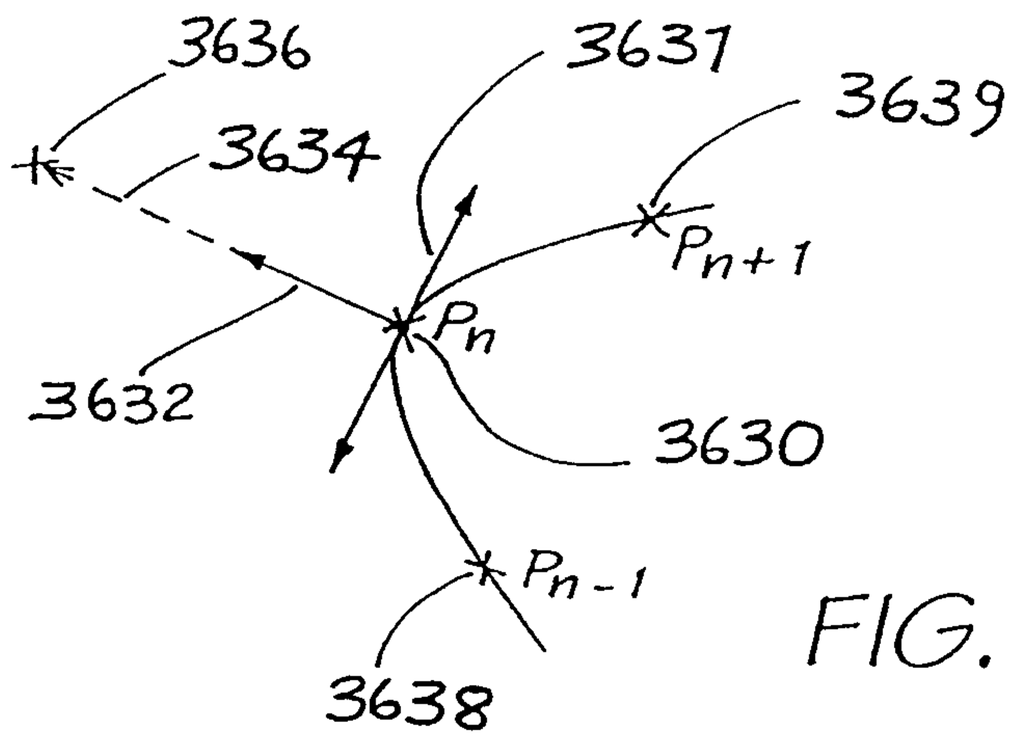

FIG. 269

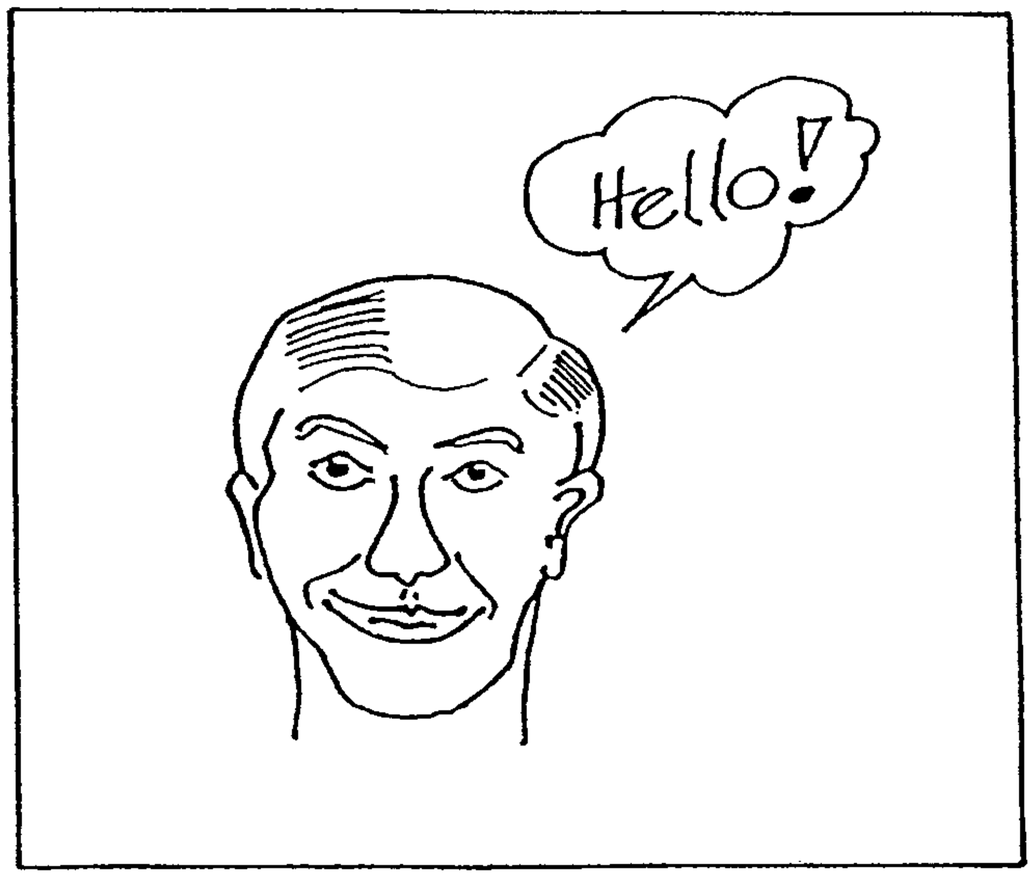

FIG. 271

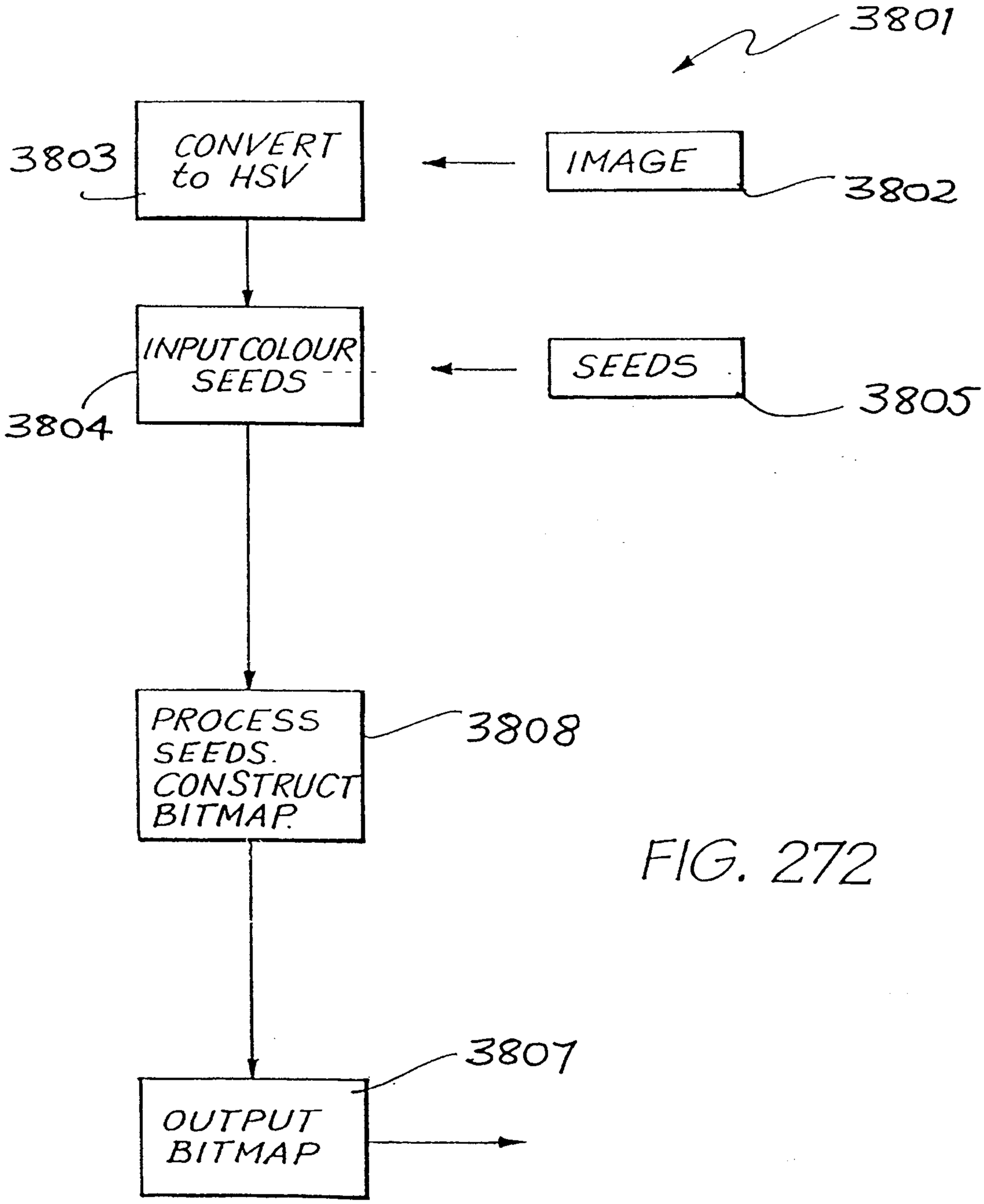
3801
IMAGE
3802
3803
CONVERT to HSV
INPUT COLOUR SEEDS
3804
SEEDS
3805
PROCESS SEEDS. CONSTRUCT BITMAP.
3808
3807
OUTPUT BITMAP

FIG. 272

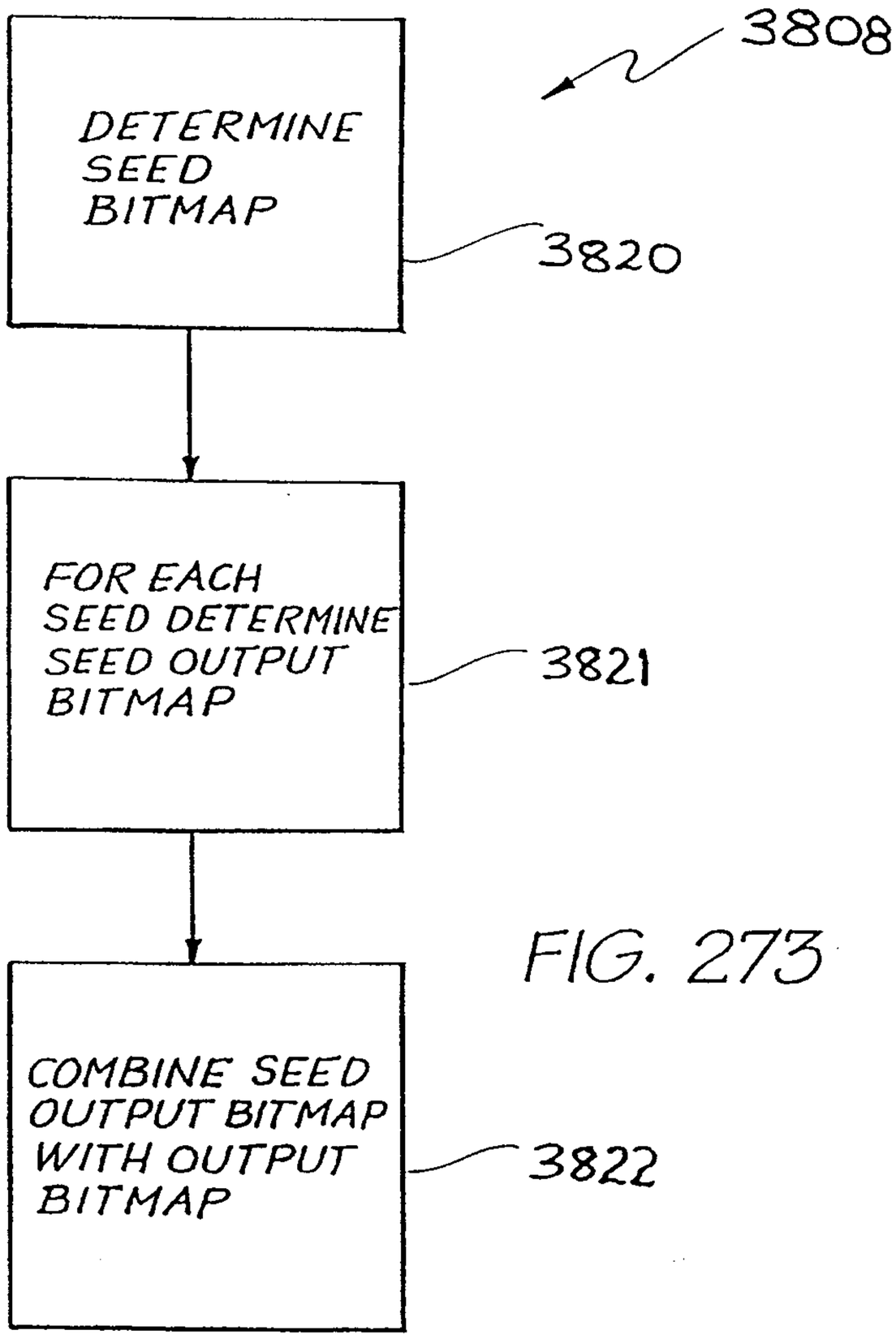
3808
DETERMINE SEED BITMAP
3820
FOR EACH SEED DETERMINE SEED OUTPUT BITMAP
3821
COMBINE SEED OUTPUT BITMAP WITH OUTPUT BITMAP
3822

FIG. 273

190 / 246

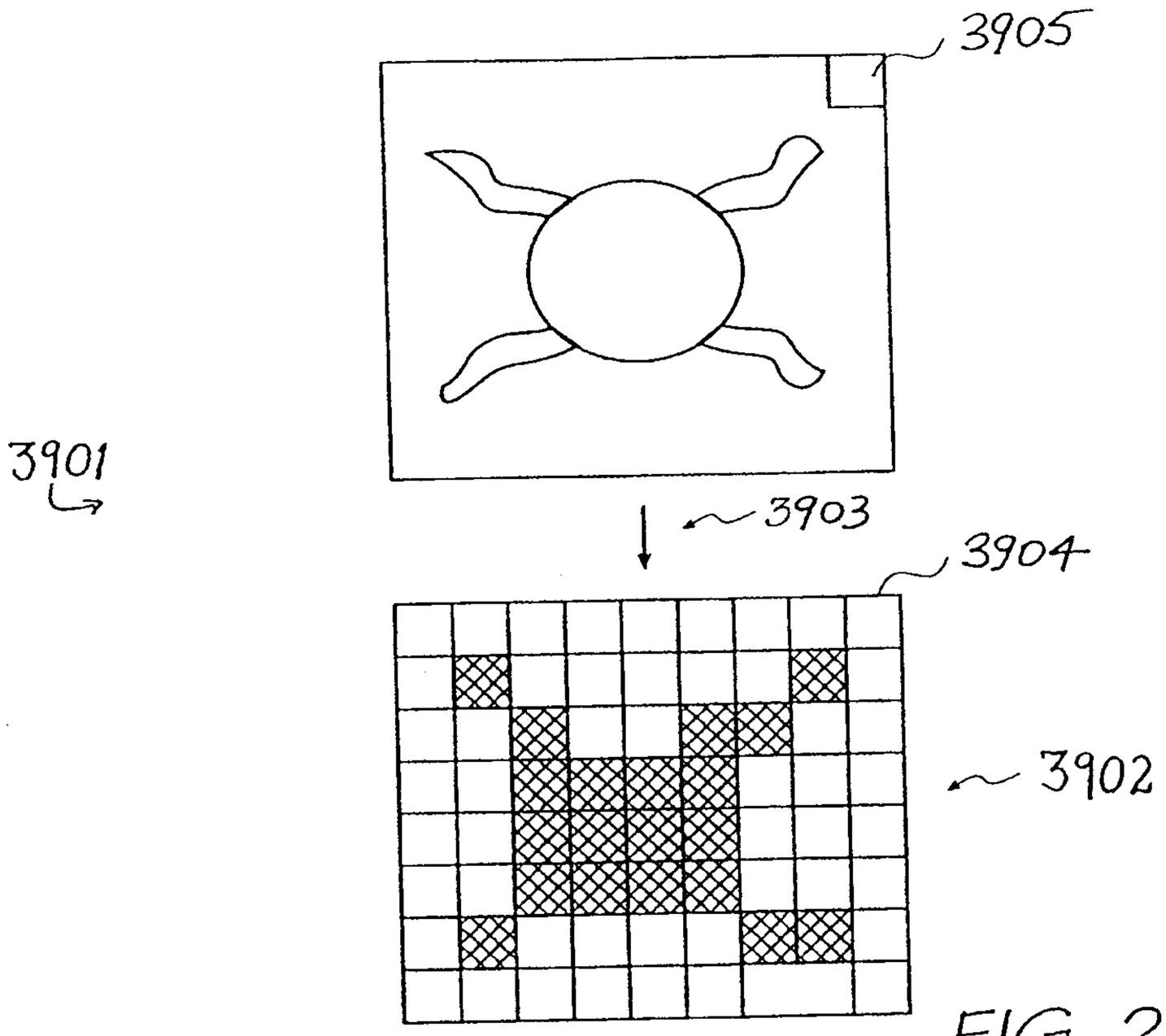

FIG. 274

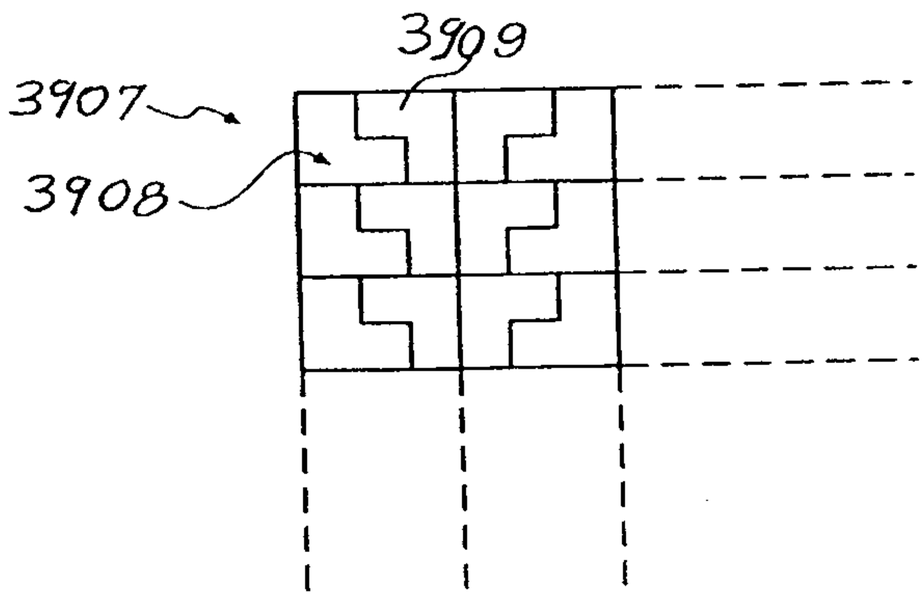

FIG. 275

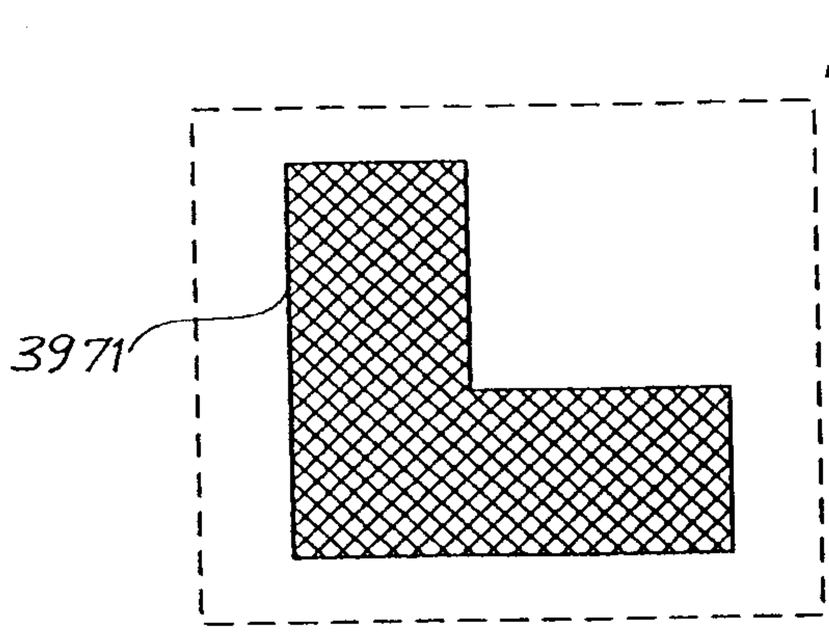

FIG. 276

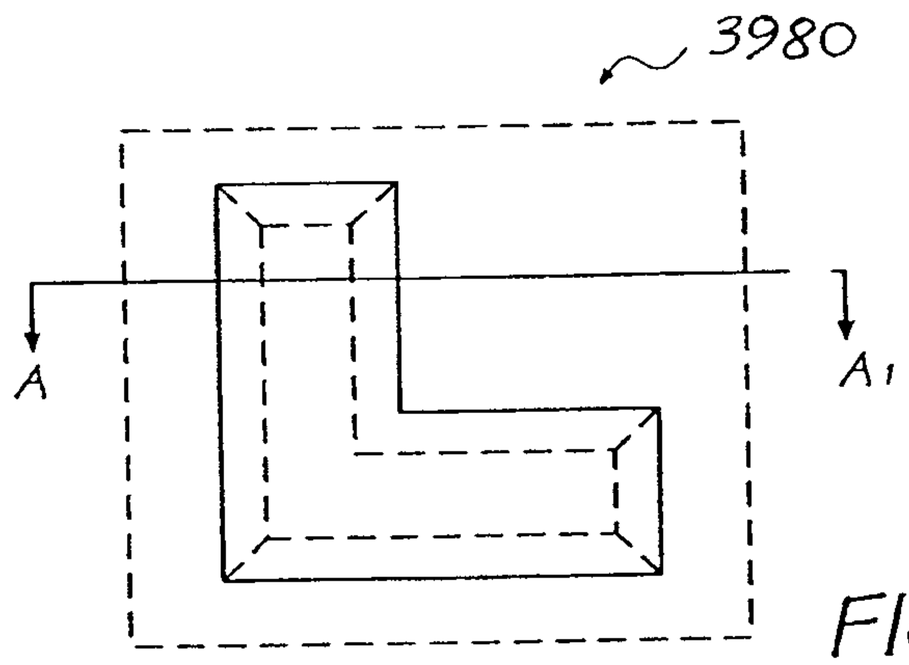

FIG. 277

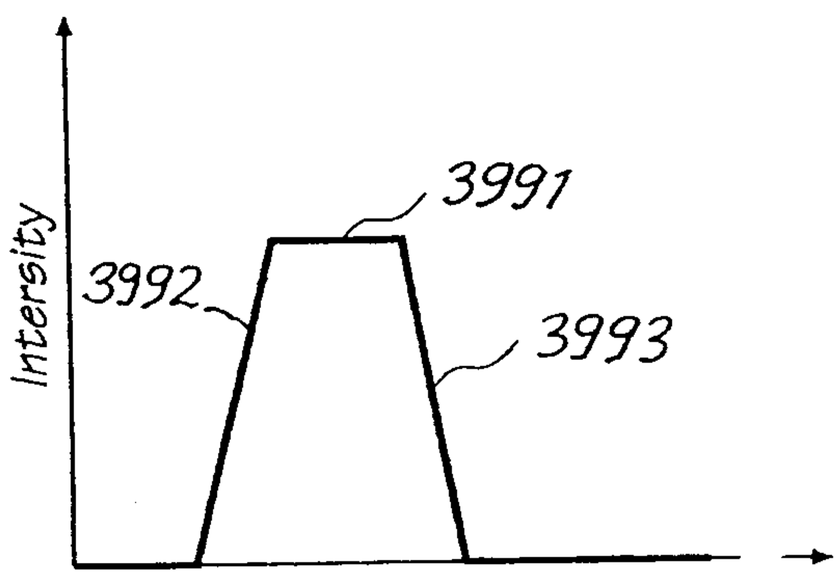

FIG. 278

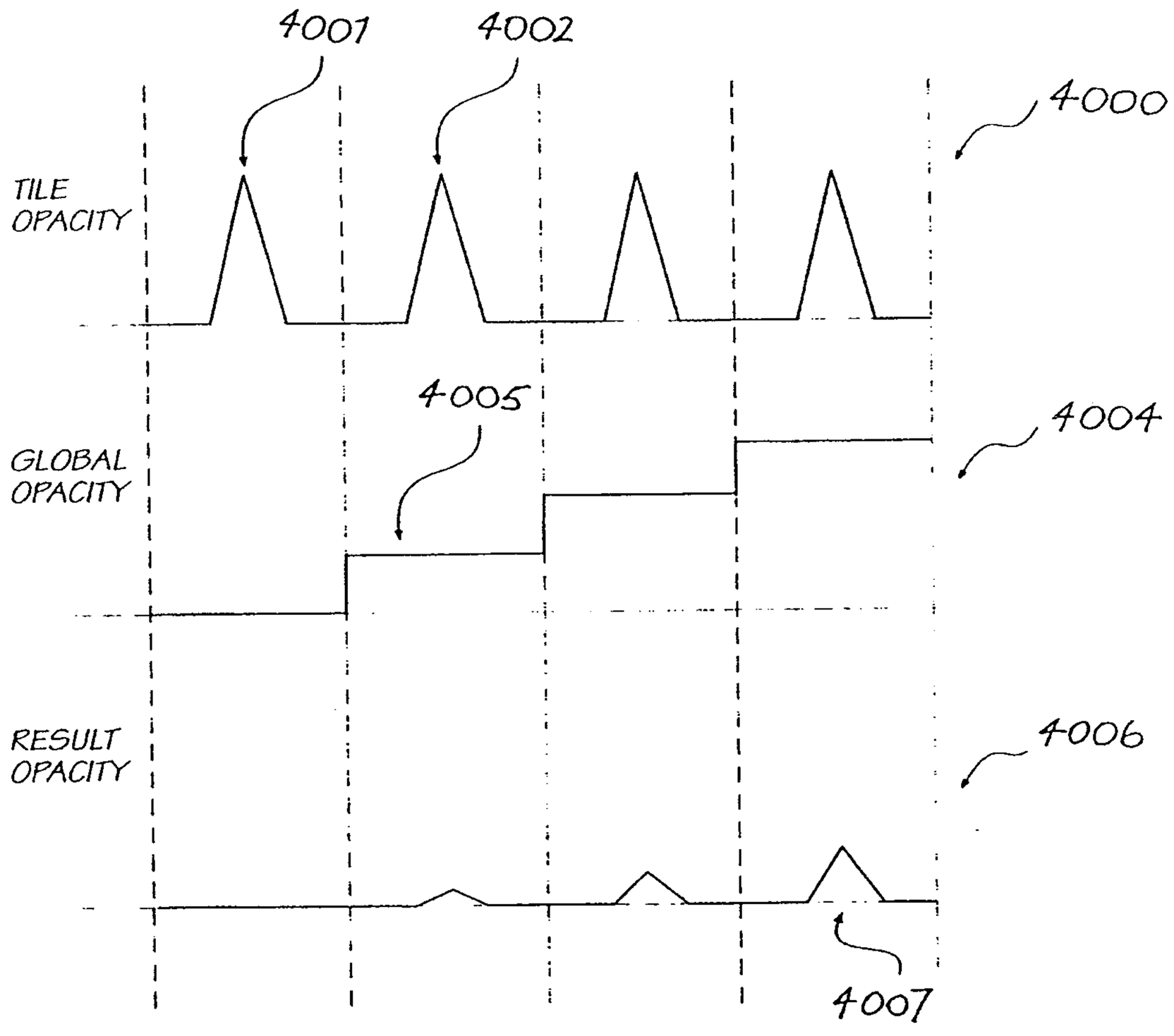
4001
4002
4000
TILE OPACITY
4005
4004
GLOBAL OPACITY
RESULT OPACITY
4006
4007

FIG. 279

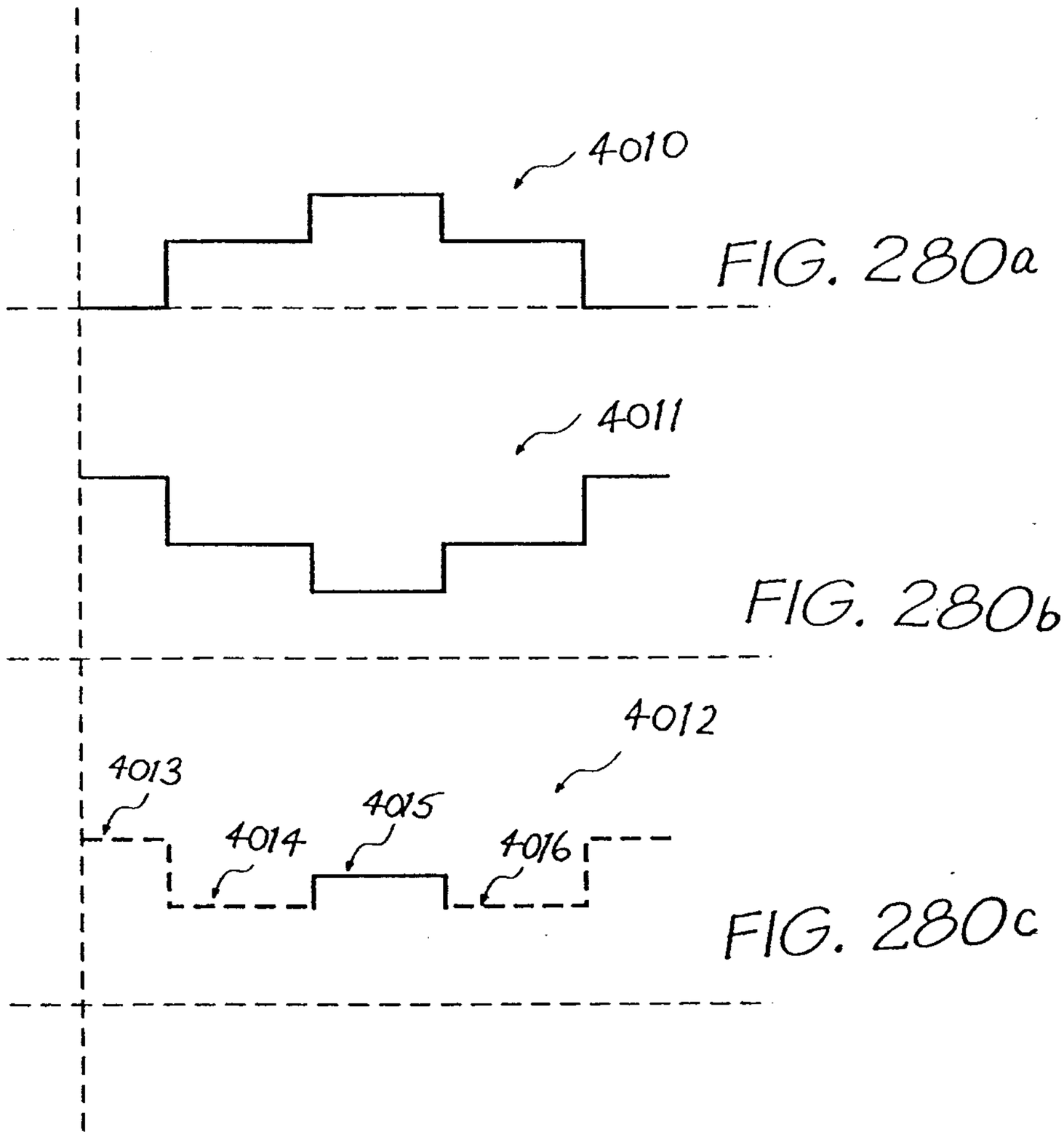

FIG. 280a

FIG. 280b

FIG. 280c

194 / 246

4025

BRUSH STROKE	PAINT COLOR	STROKE COLOR
B_1	C_1 C_2 C_3 C_4	S_1 S_2 S_3 S_4
B_2	C_1 C_2 C_3 C_4	S_1 S_2 S_3 S_4
B_3	C_1 C_2 C_3 C_4	S_1 S_2 S_3 S_4
B_4	C_1 C_2 C_3	S_1 S_2 S_3

FIG. 281

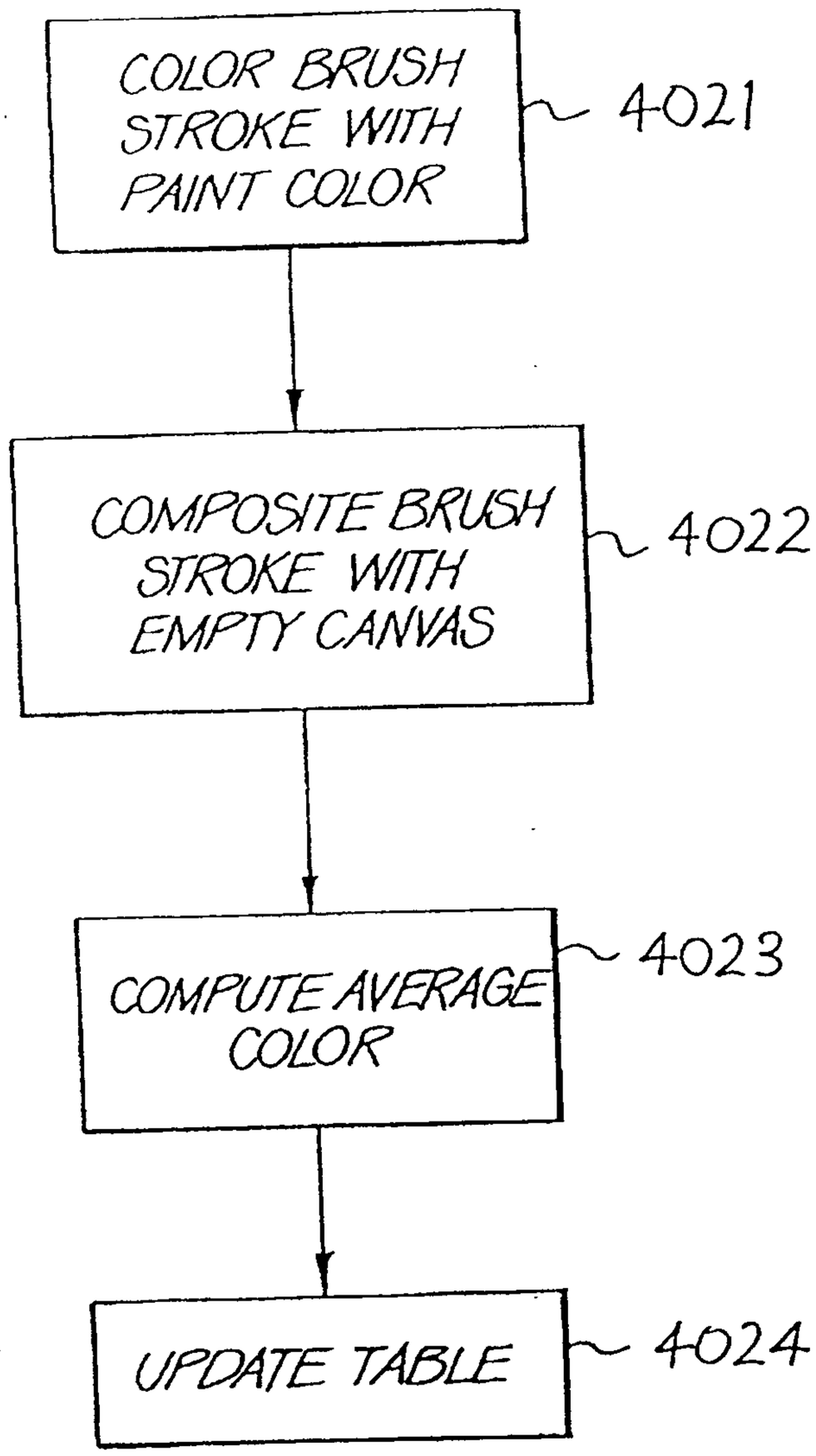
COLOR BRUSH STROKE WITH PAINT COLOR
4021
COMPOSITE BRUSH STROKE WITH EMPTY CANVAS
4022
COMPUTE AVERAGE COLOR
4023
UPDATE TABLE
4024

FIG. 282

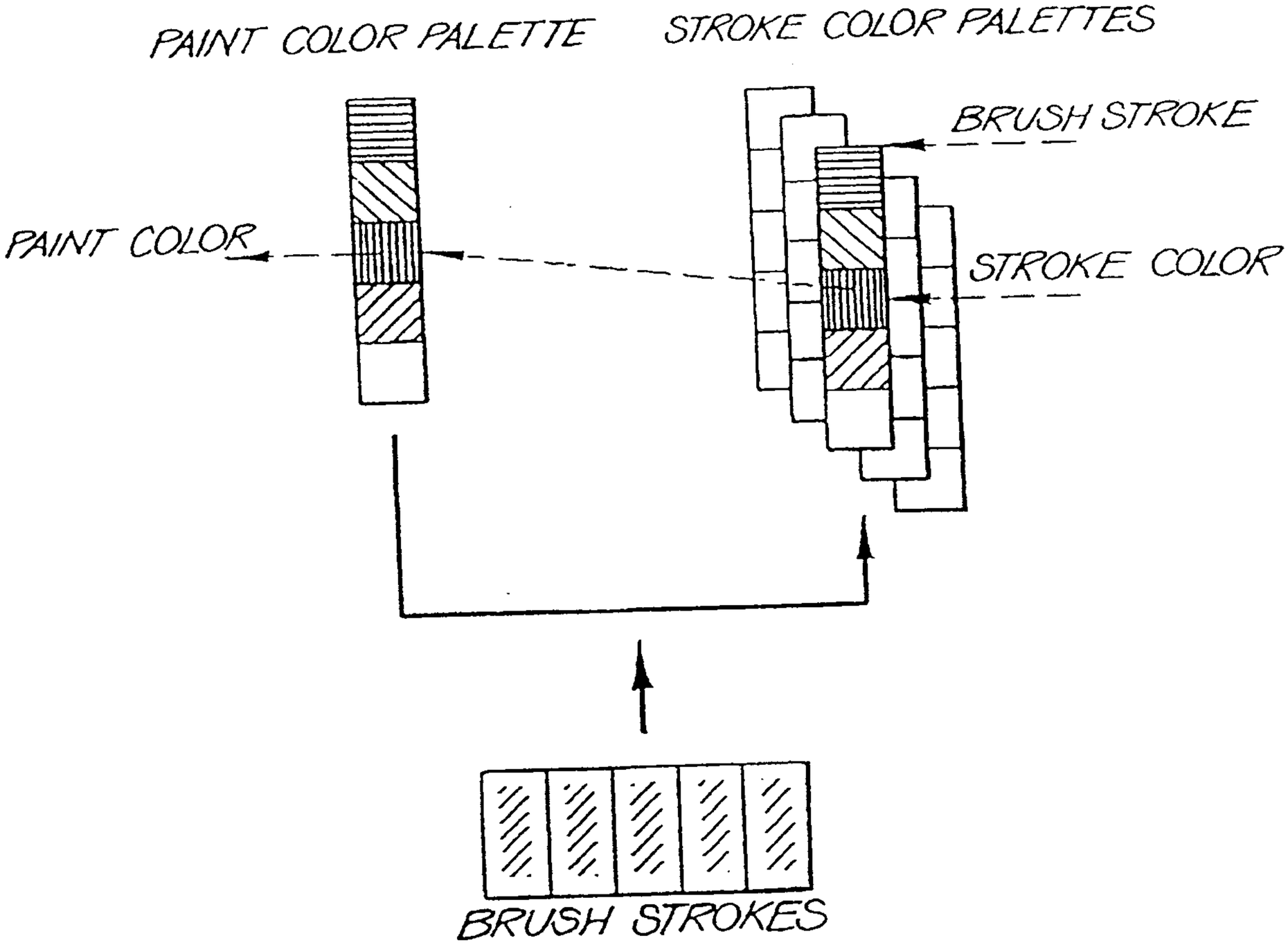
PAINT COLOR PALETTE
STROKE COLOR PALETTES
BRUSH STROKE
PAINT COLOR
STROKE COLOR
BRUSH STROKES

FIG. 283

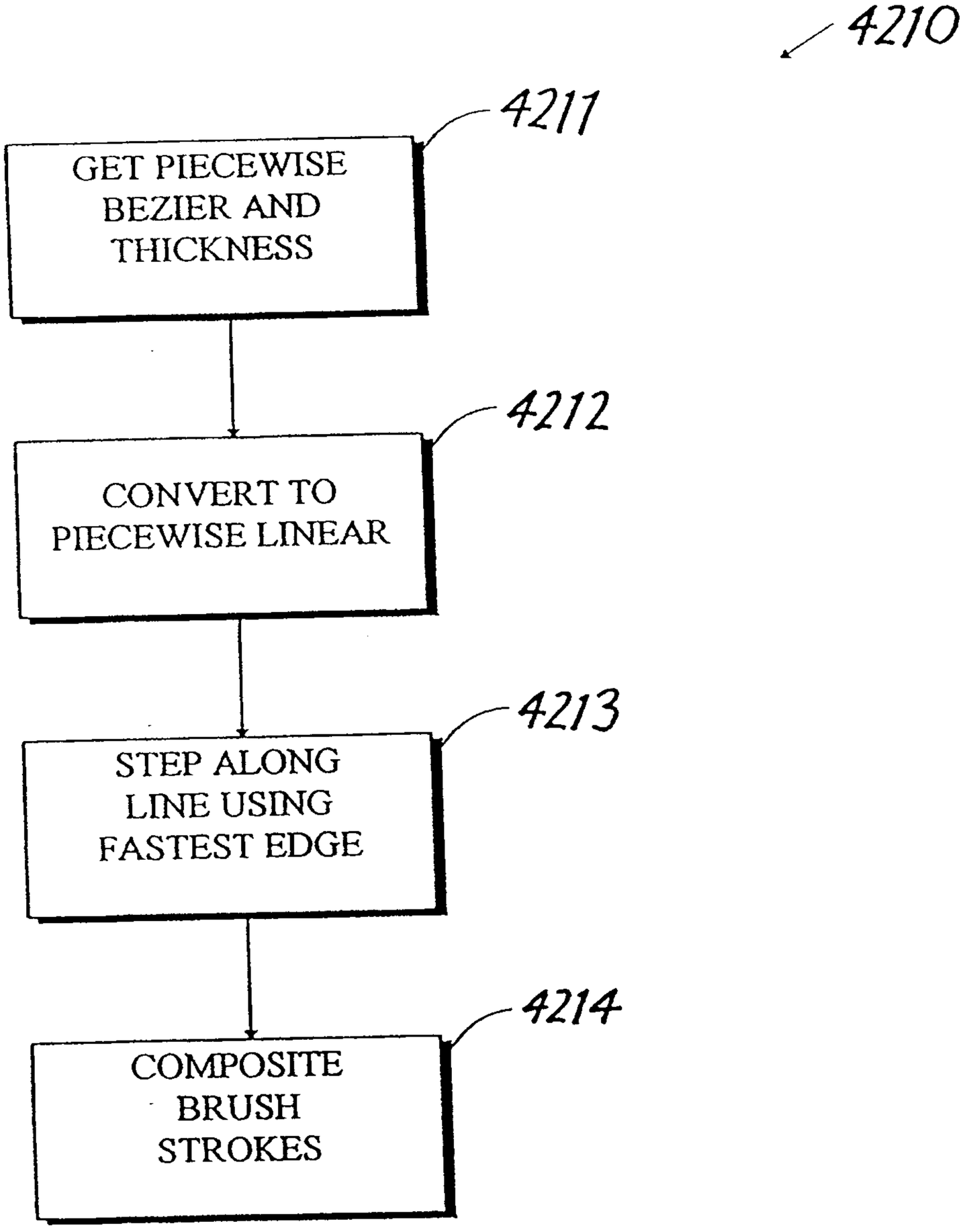
4210
GET PIECEWISE BEZIER AND THICKNESS
4211
CONVERT TO PIECEWISE LINEAR
4212
STEP ALONG LINE USING FASTEST EDGE
4213
COMPOSITE BRUSH STROKES
4214

FIG. 284

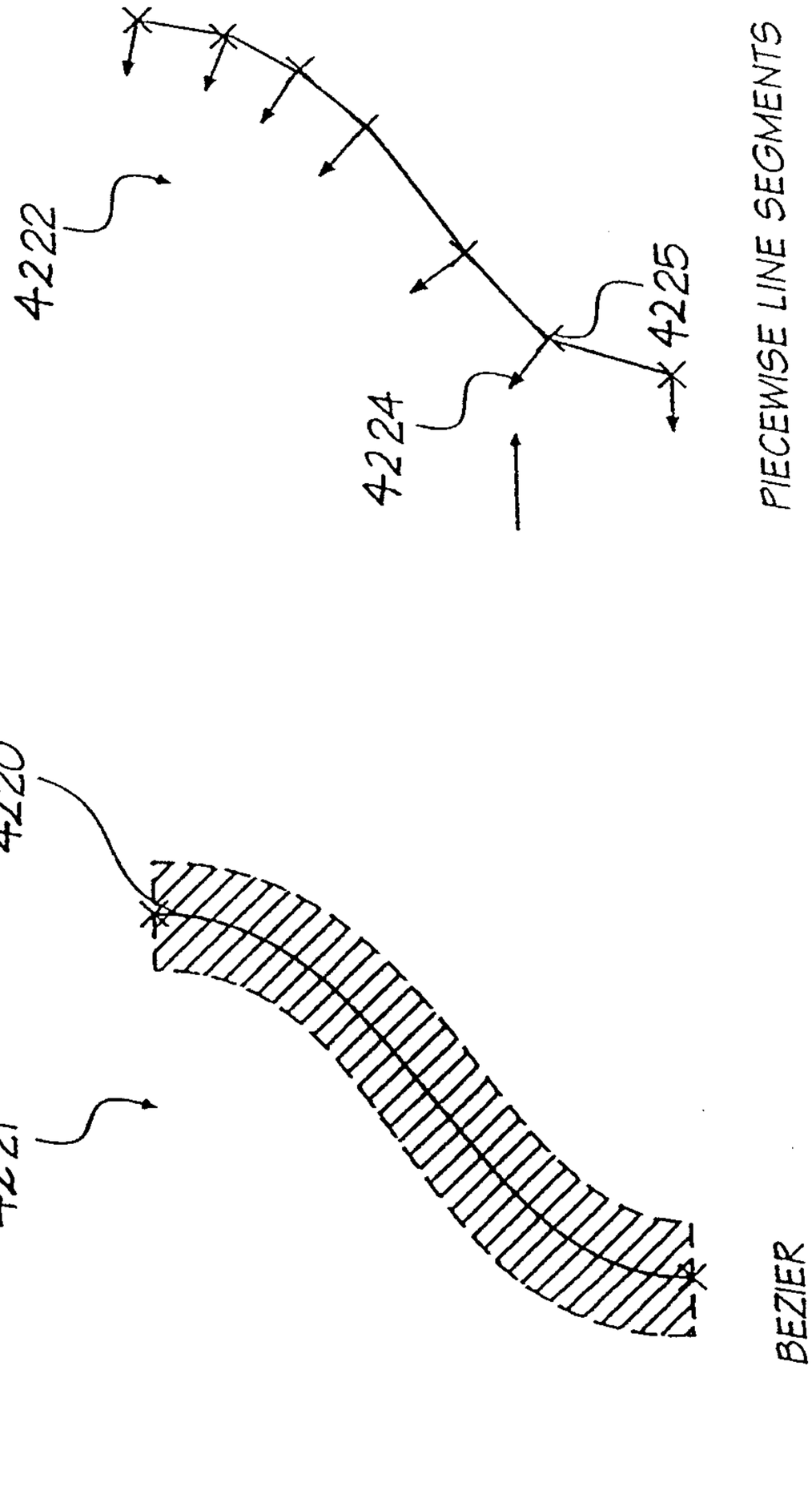

FIG. 285

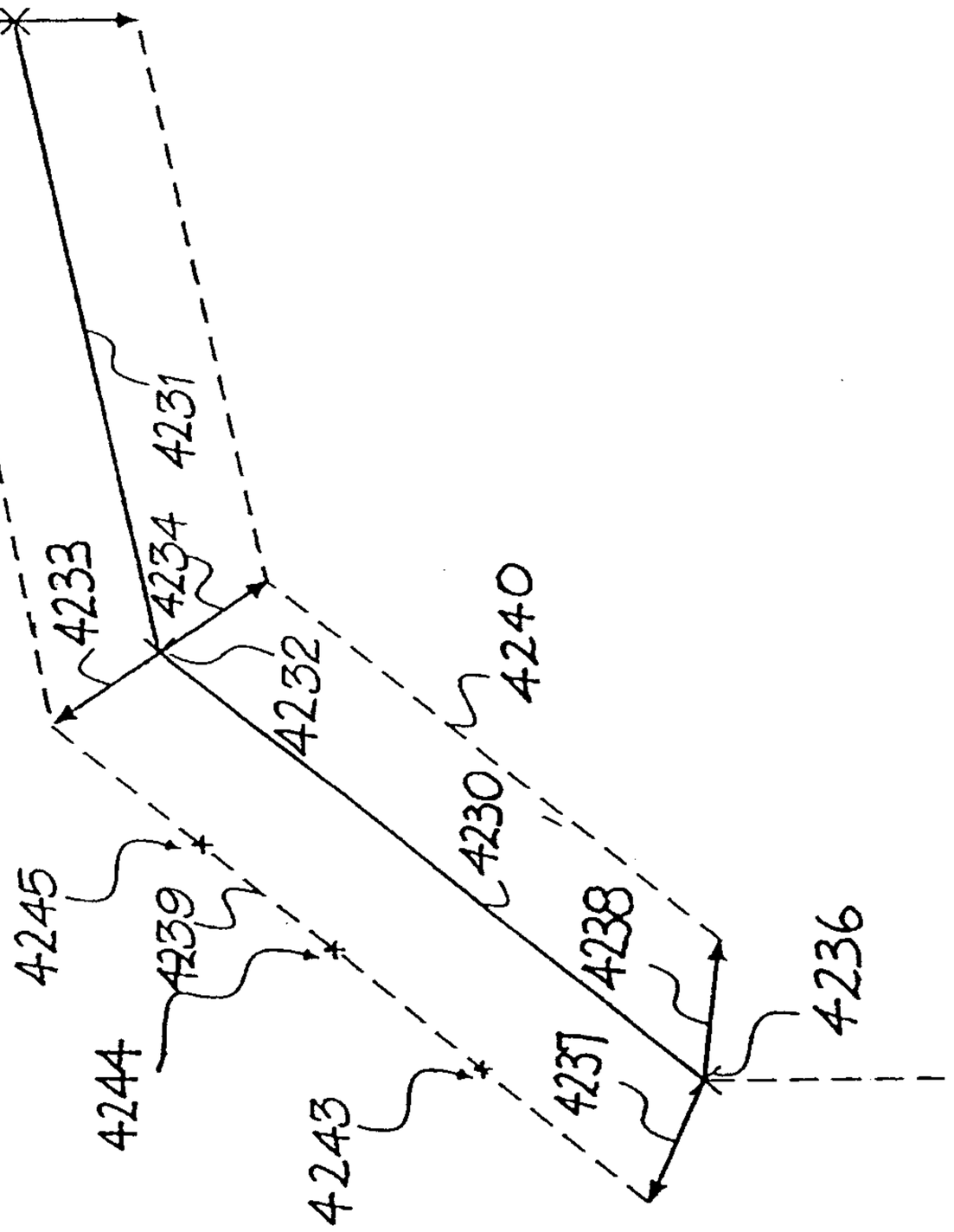
4233
4234
4231
4232
4240
4230
4245
4239
4238
4236
4244
4243
4237

FIG. 286

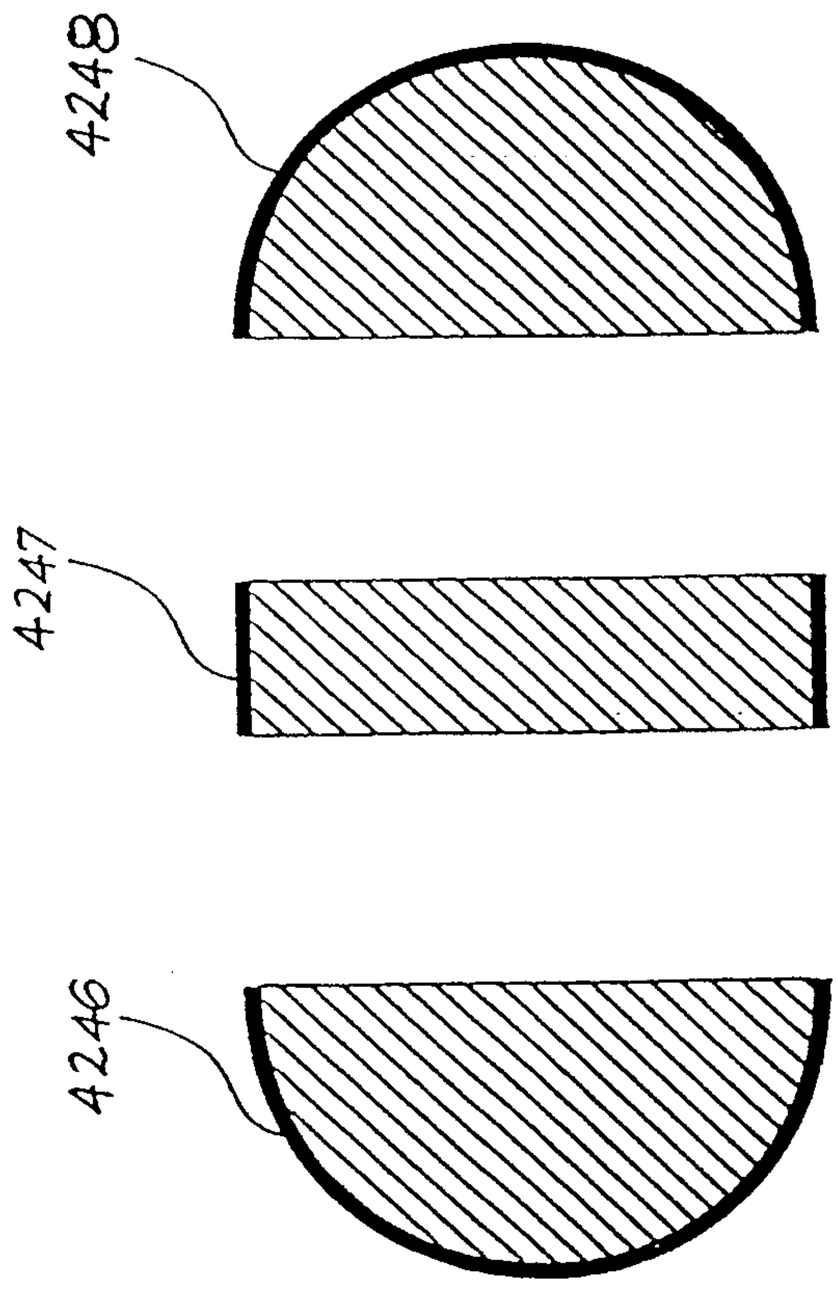

FIG. 287

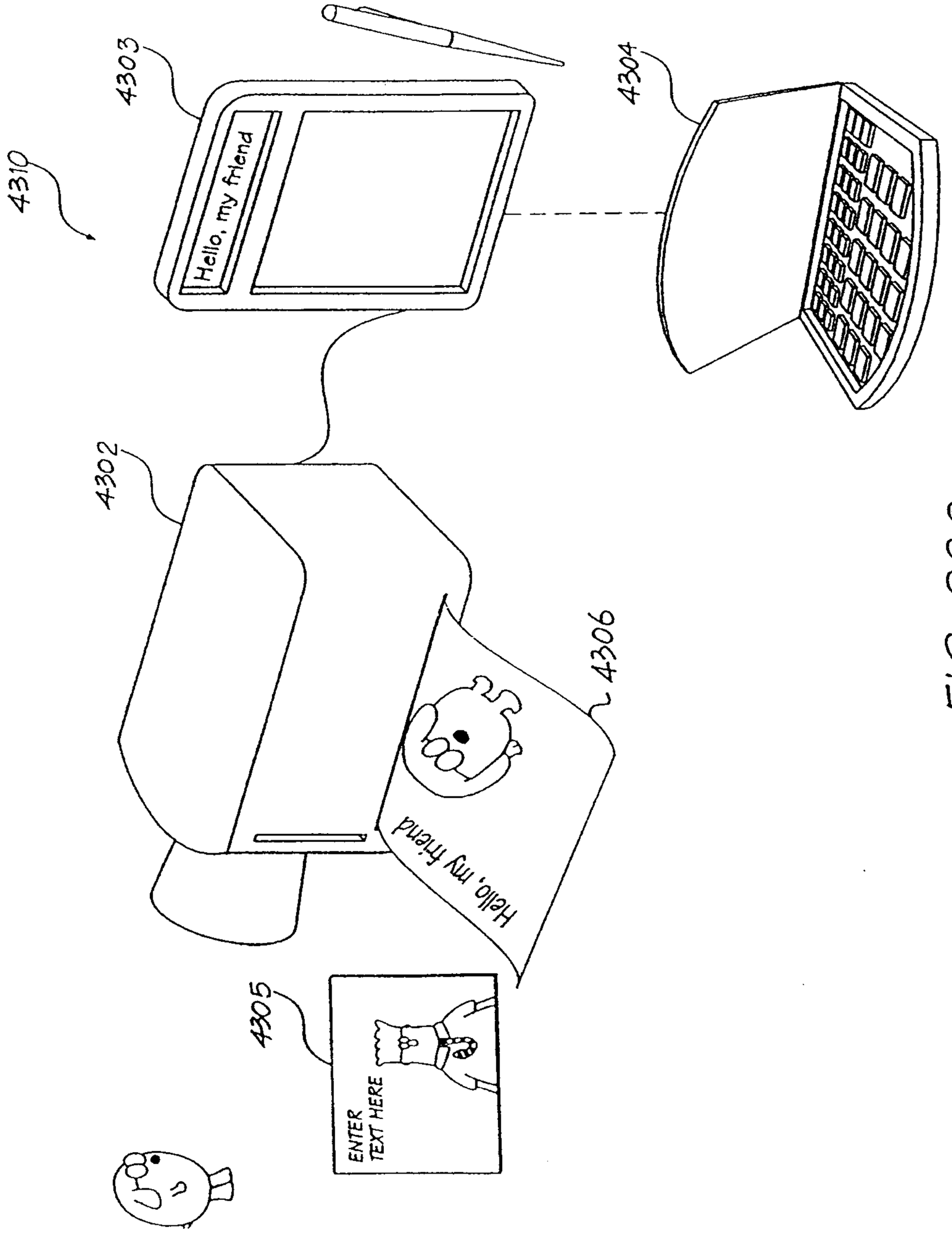
4310
4303
Hello, my friend
4304
4302
4306
Hello, my friend
4305
ENTER
TEXT HERE

FIG. 288

202 / 246

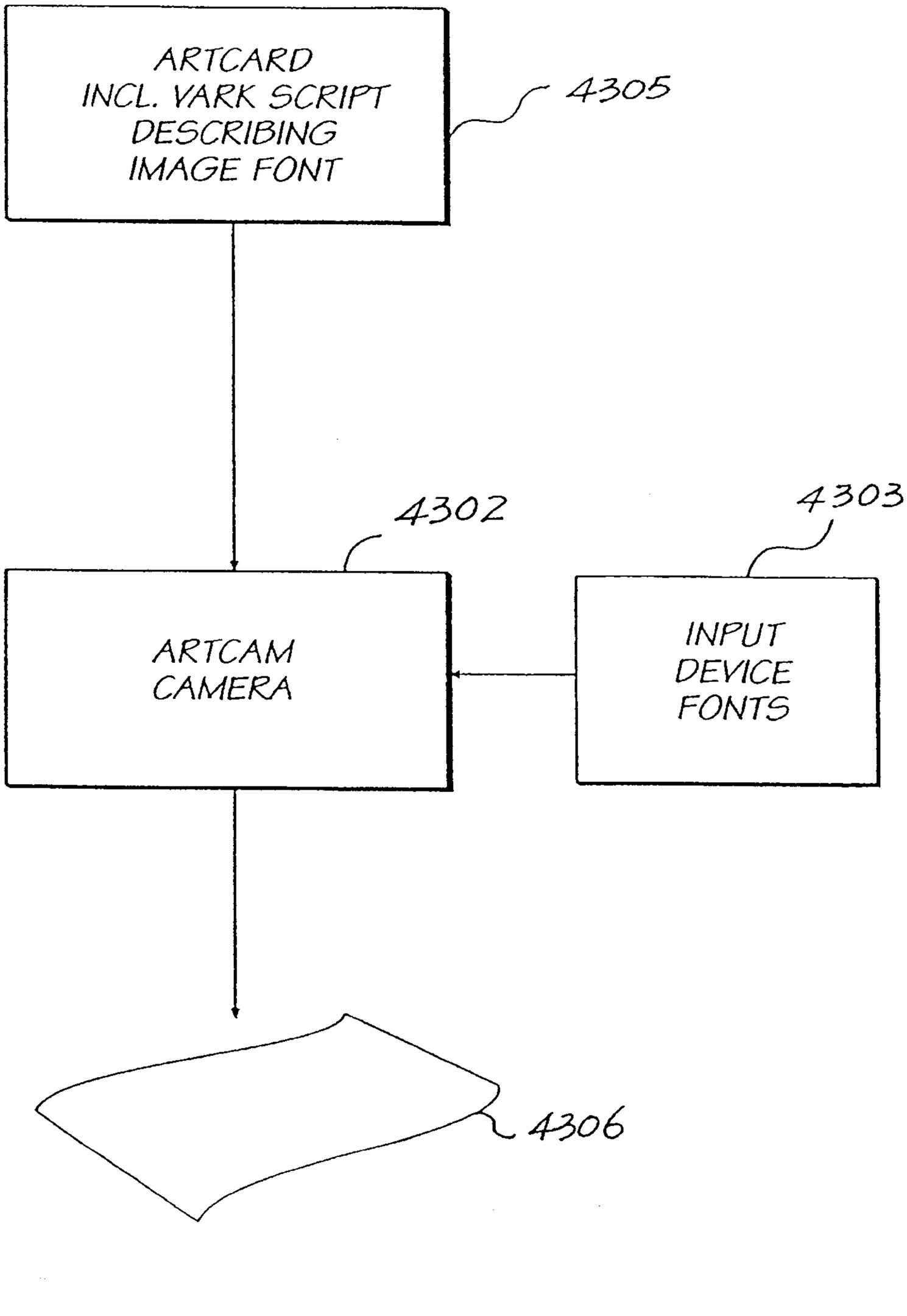

FIG. 289

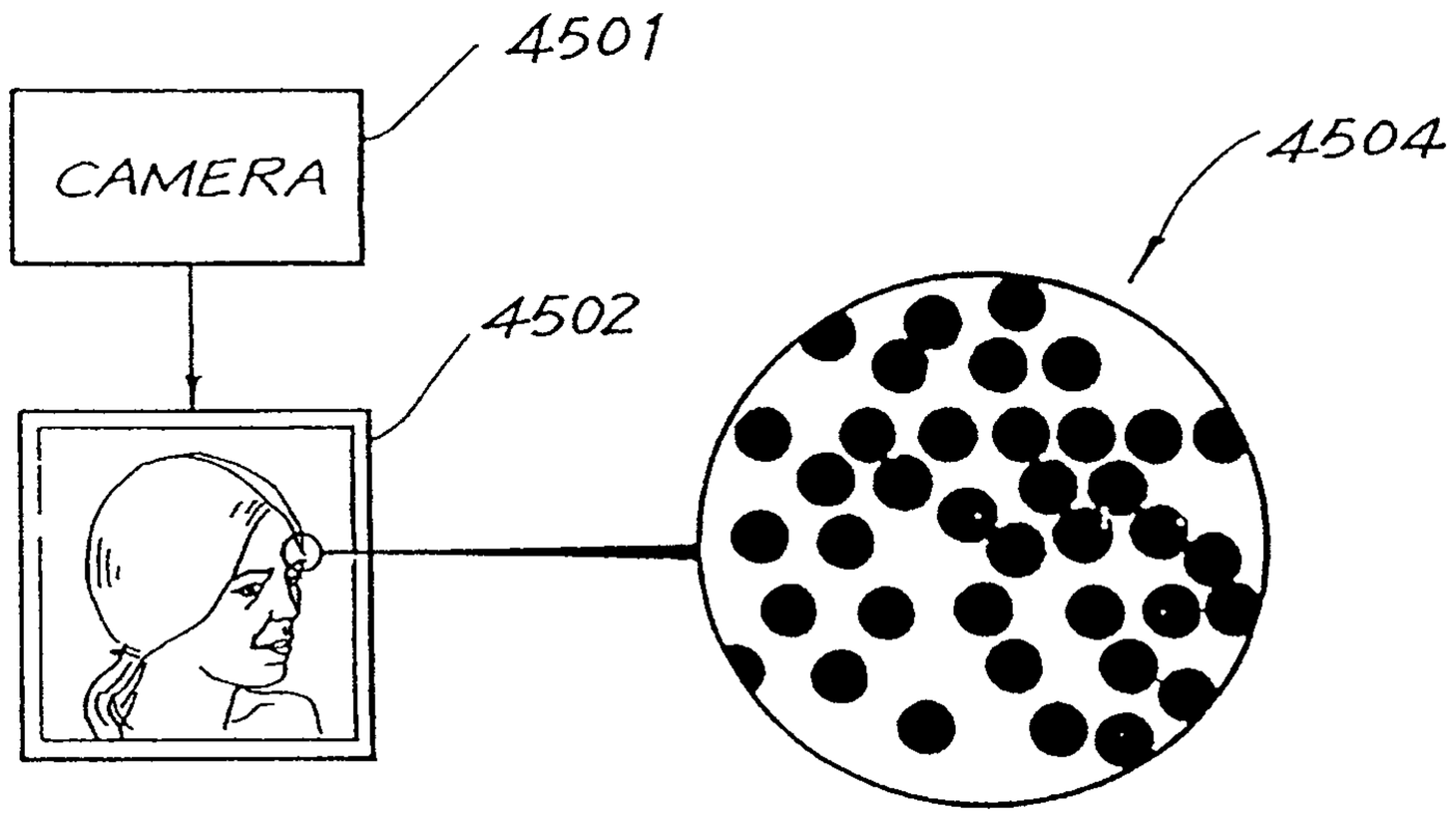

FIG. 290

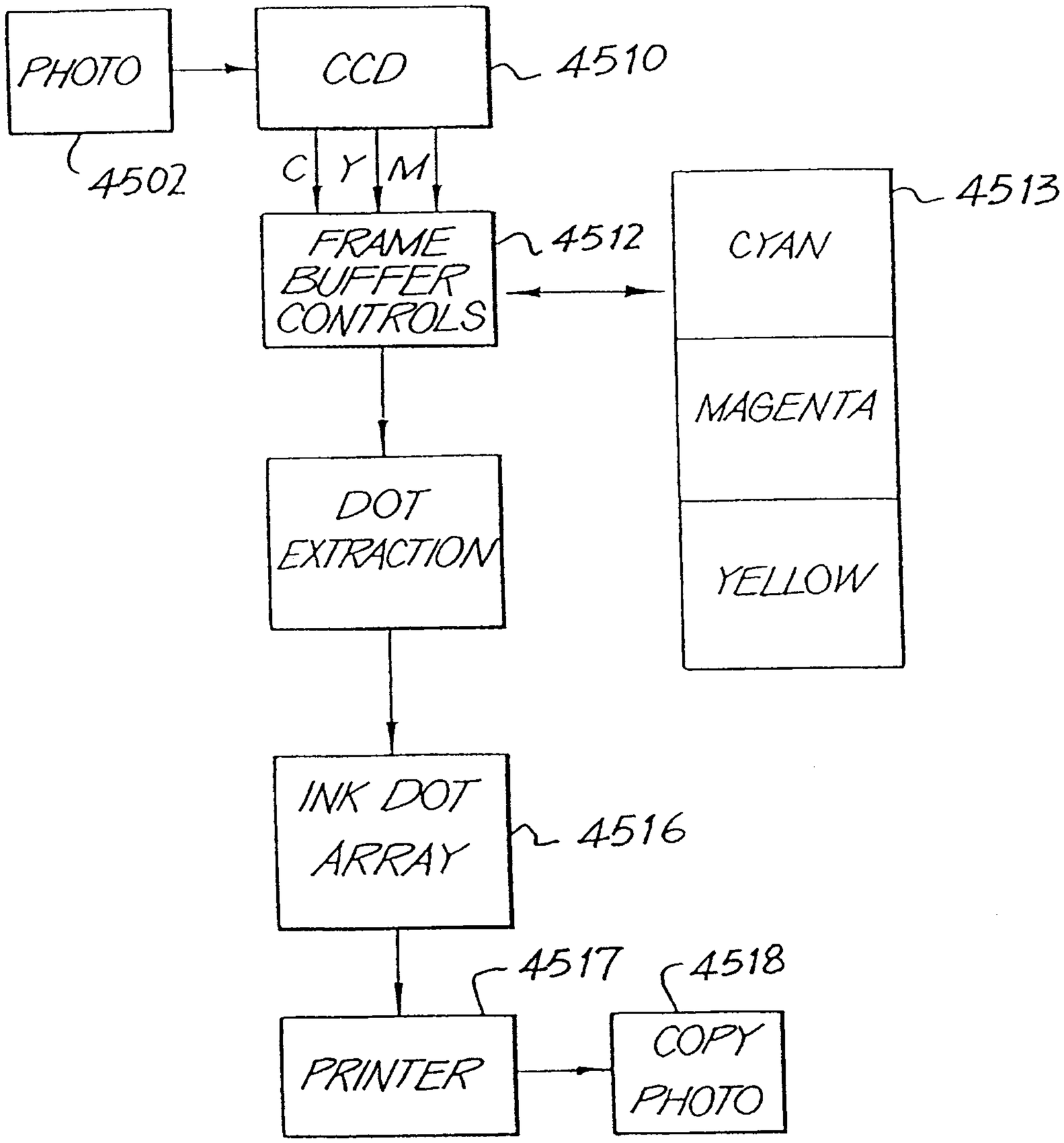
PHOTO
CCD
4510
4502
C
Y
M
FRAME BUFFER CONTROLS
4512
CYAN
4513
MAGENTA
YELLOW
DOT EXTRACTION
INK DOT ARRAY
4516
4517
4518
PRINTER
COPY PHOTO

FIG. 291

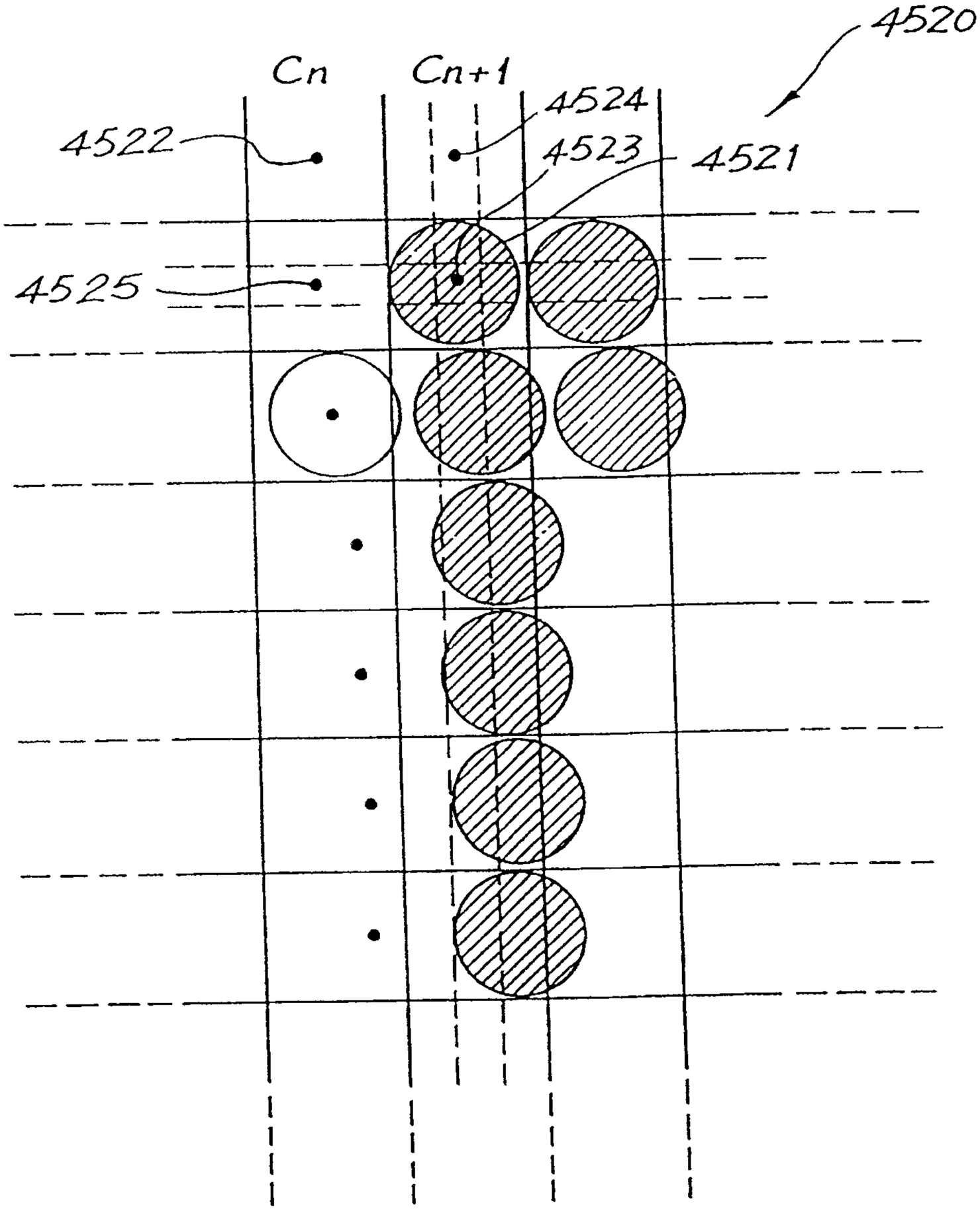

FIG. 292

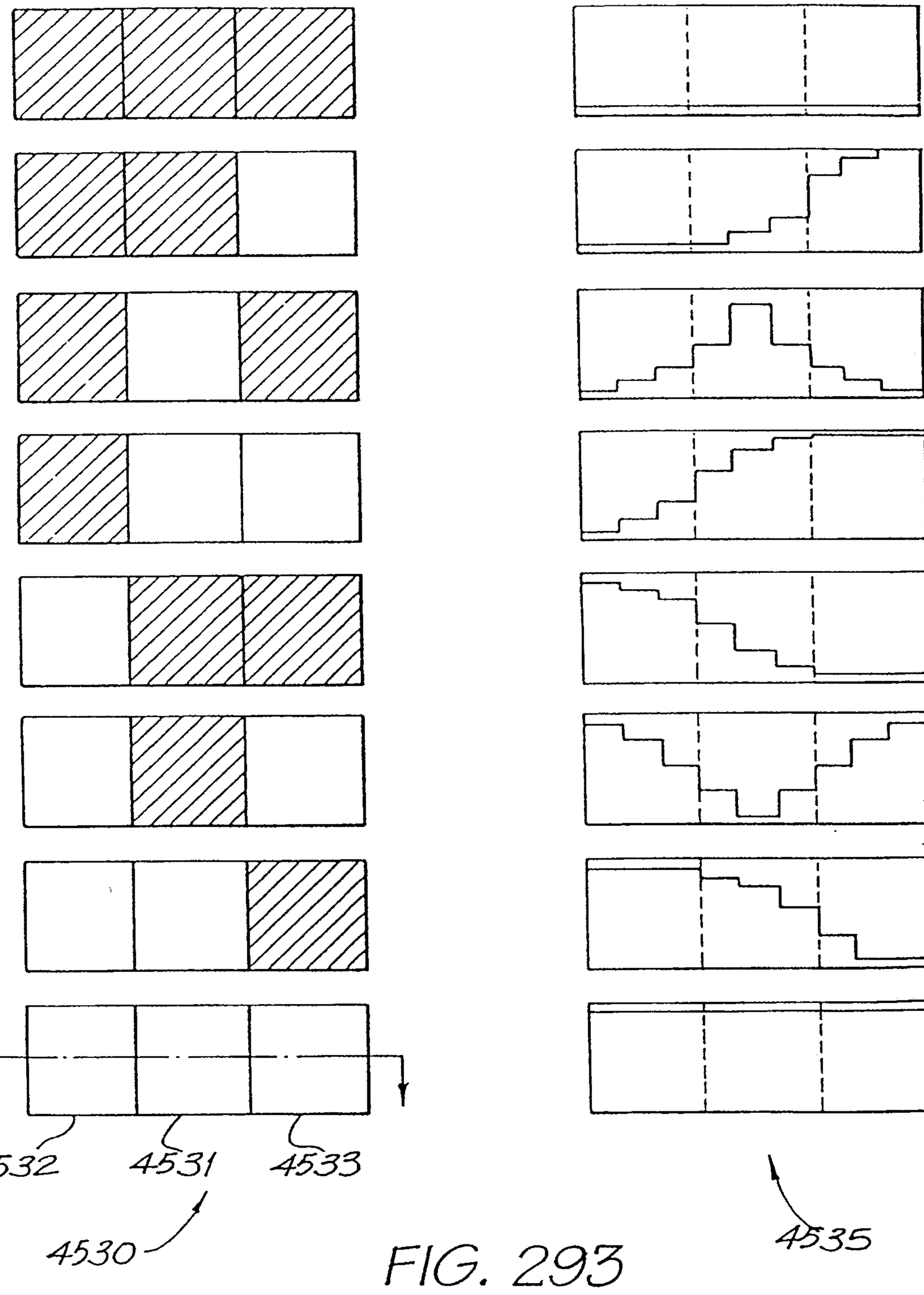

FIG. 293

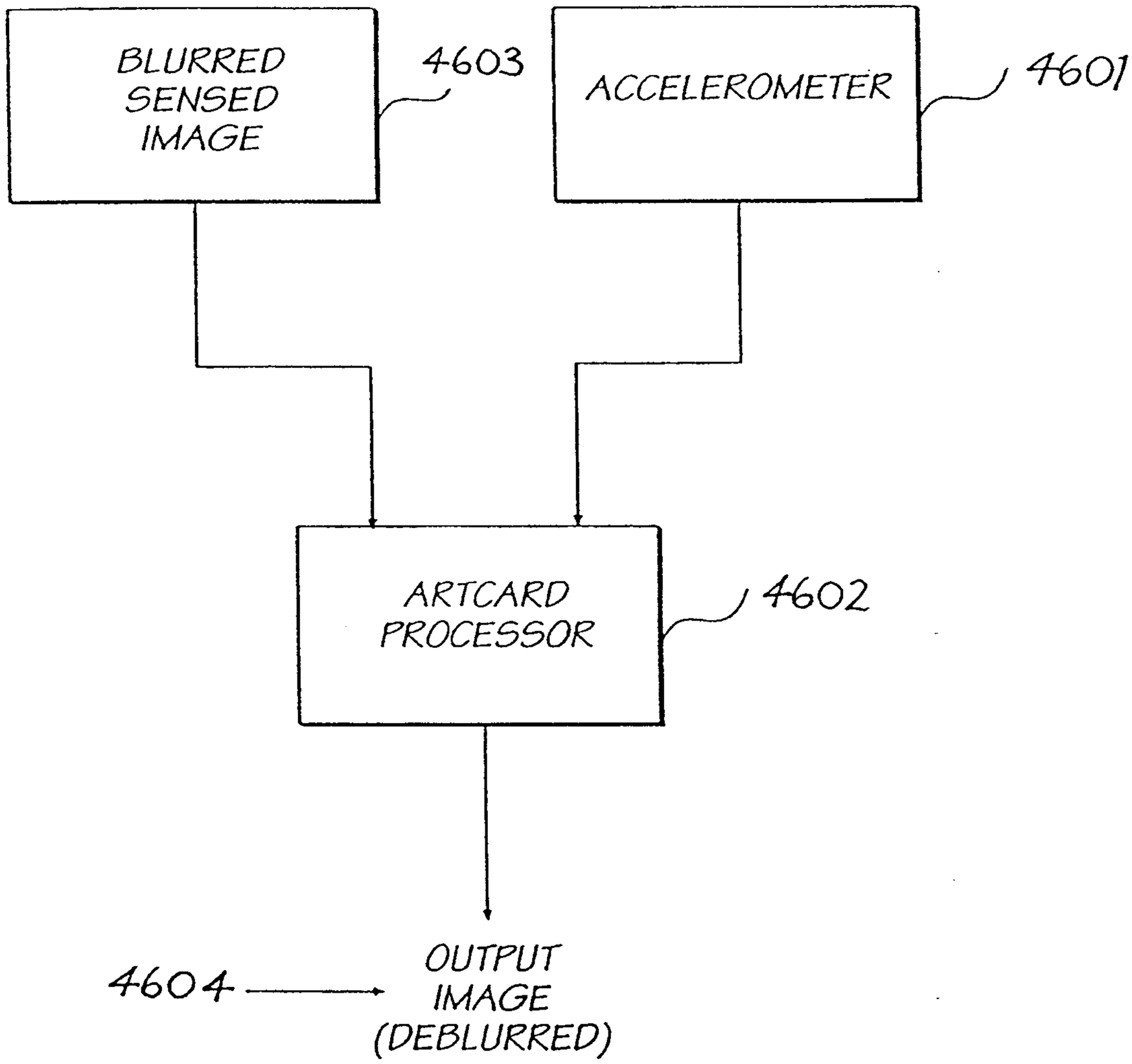
BLURRED SENSED IMAGE
4603
ACCELEROMETER
4601
ARTCARD PROCESSOR
4602
4604
OUTPUT IMAGE (DEBLURRED)

FIG. 294

208 / 246

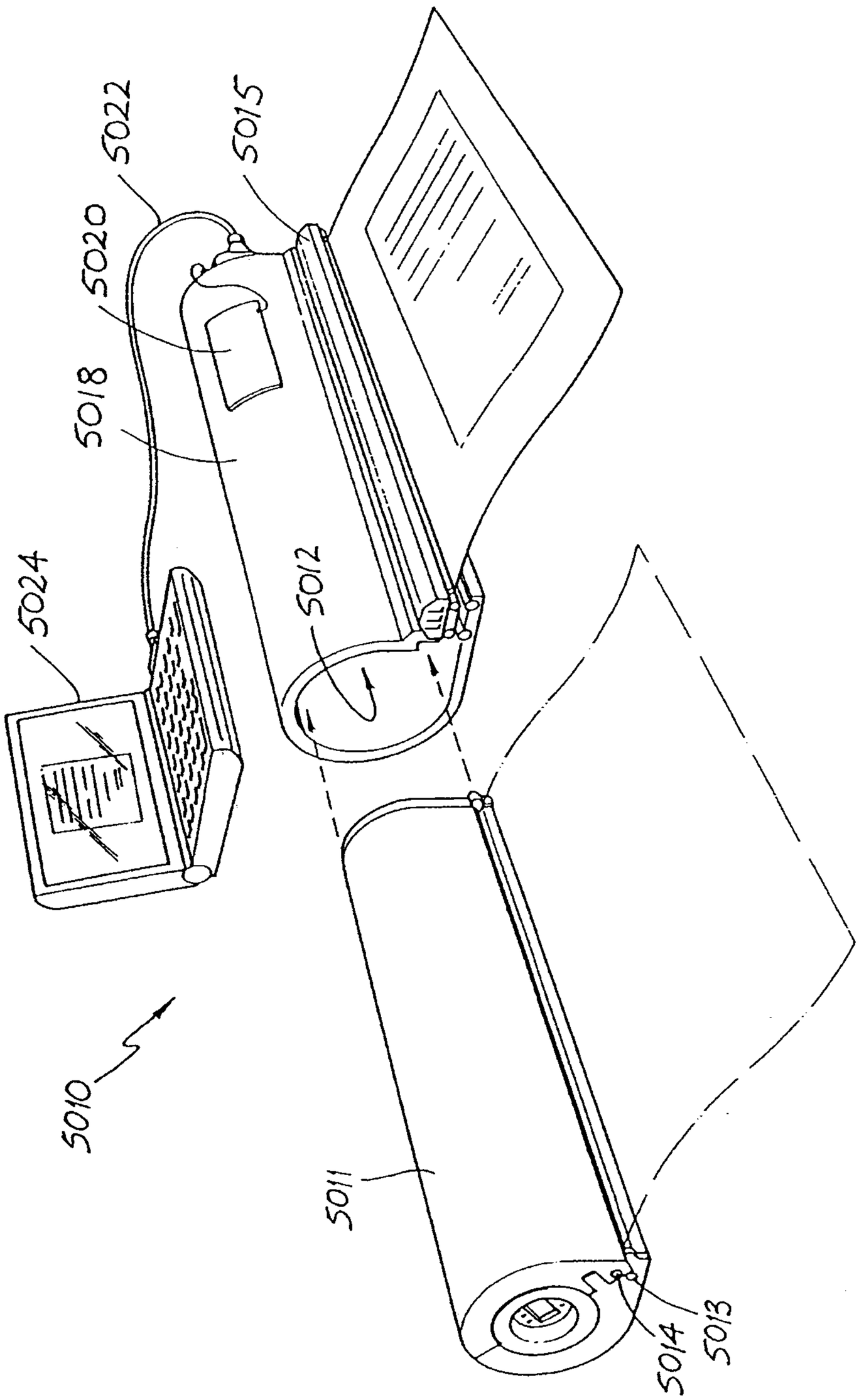

FIG. 295

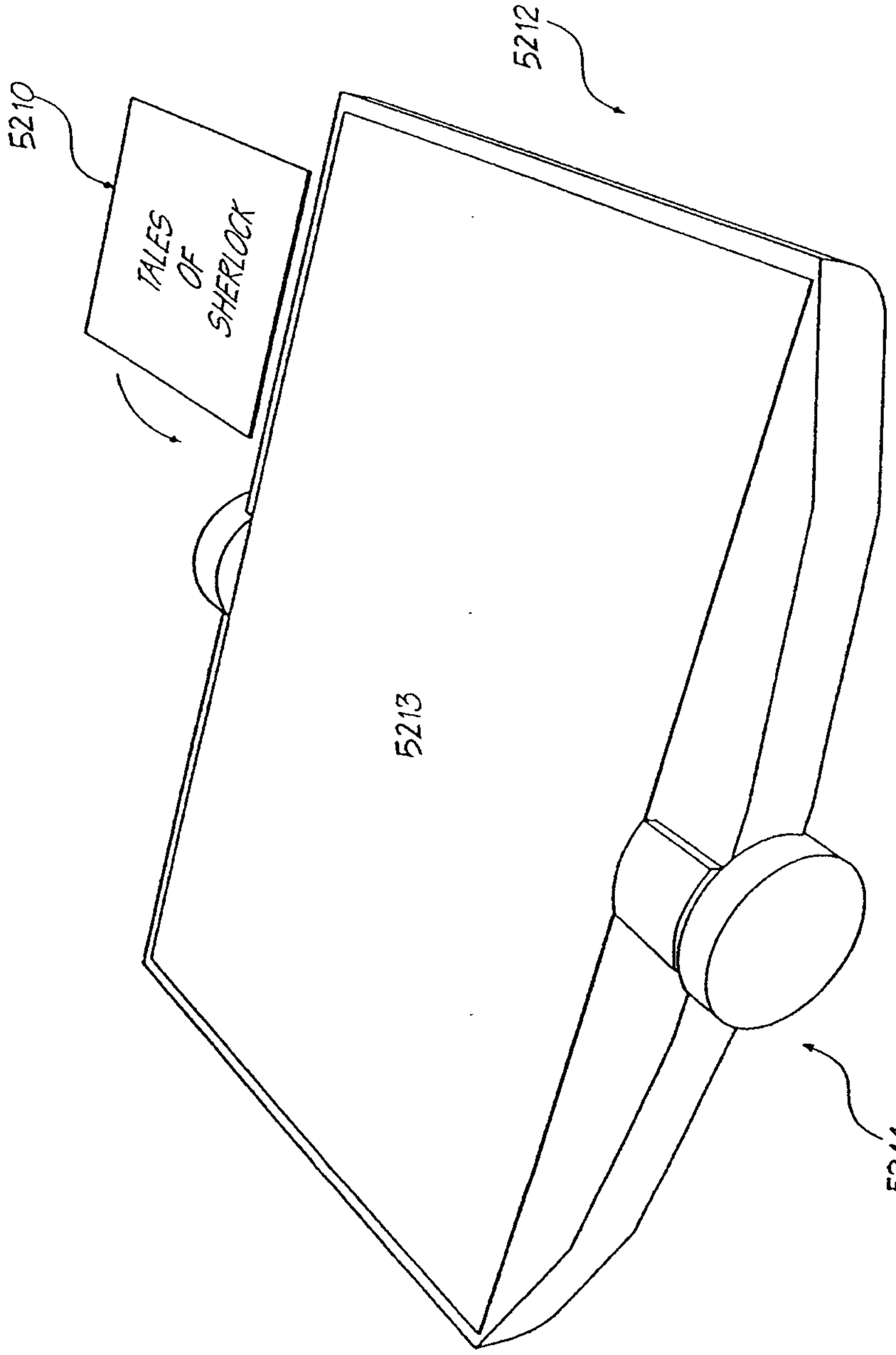

FIG. 296

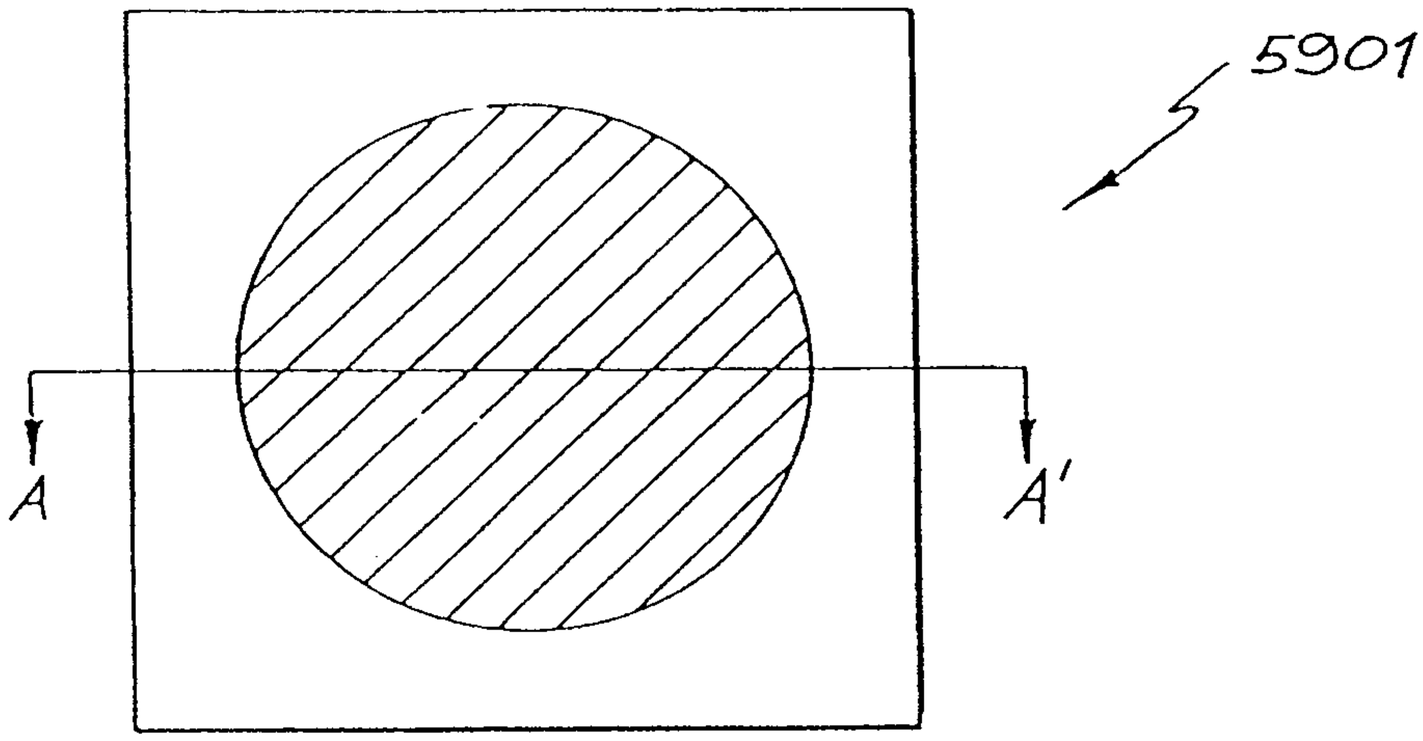

FIG. 297

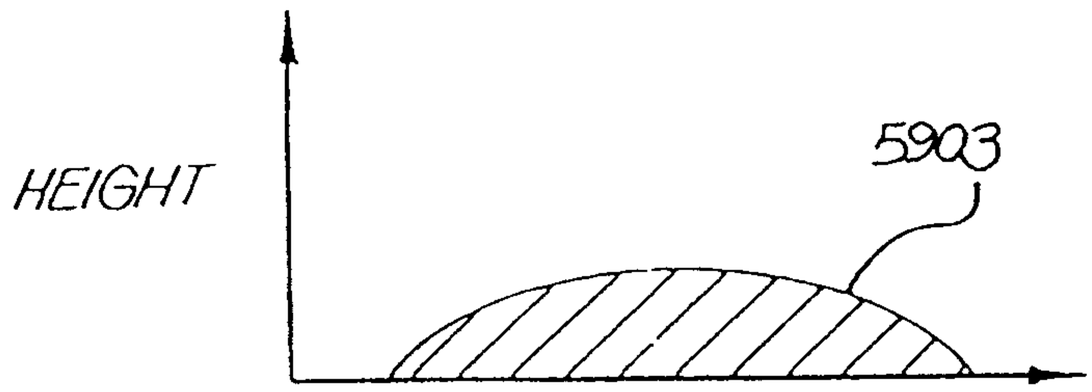

FIG. 298

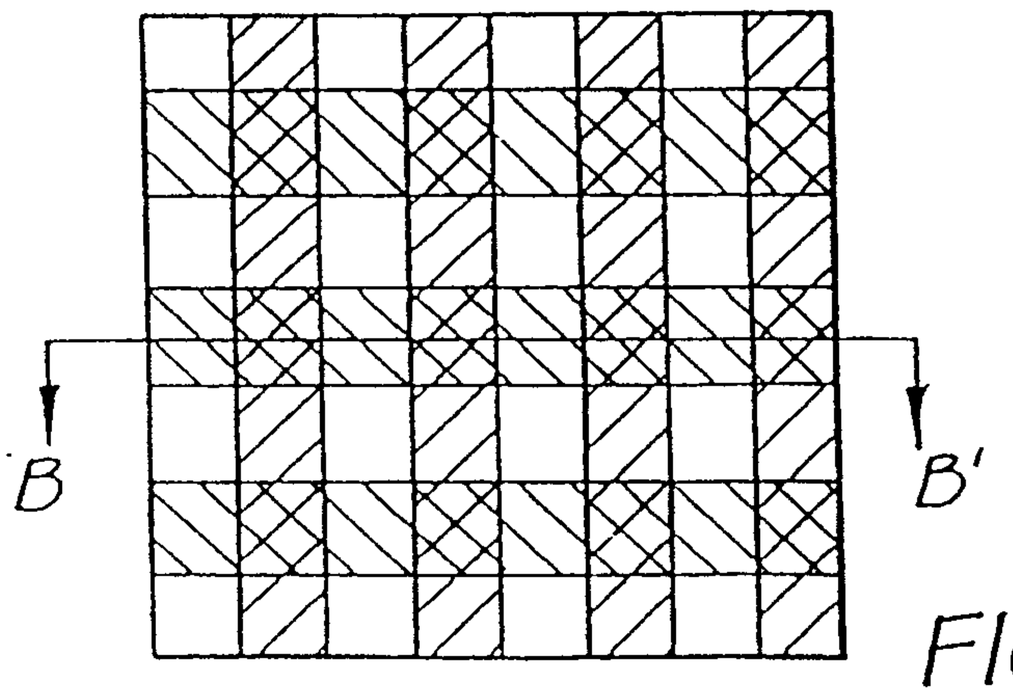

FIG. 299

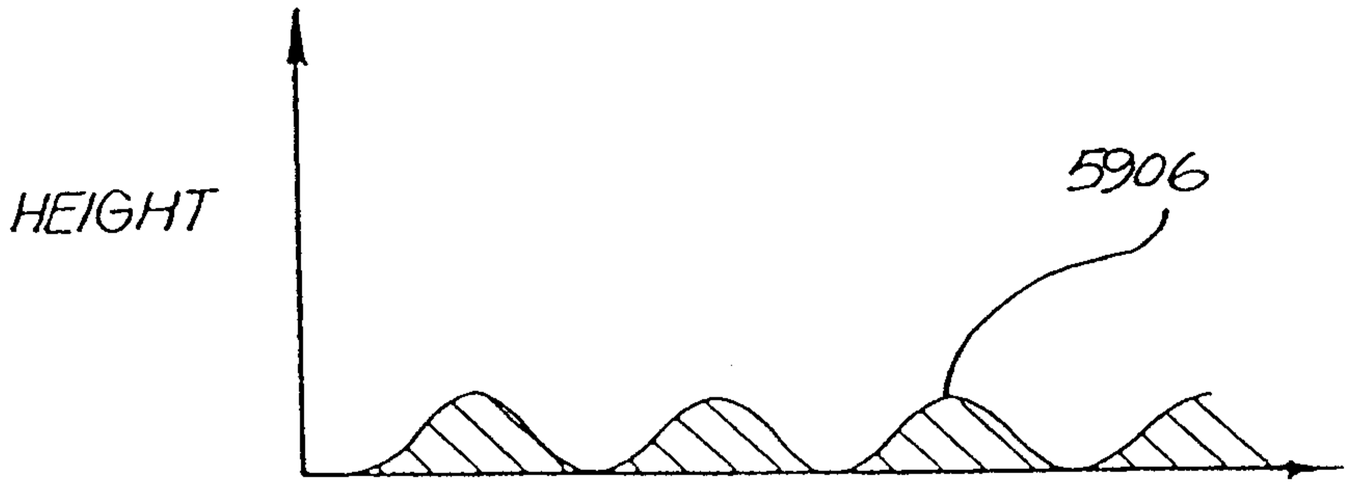

FIG. 300

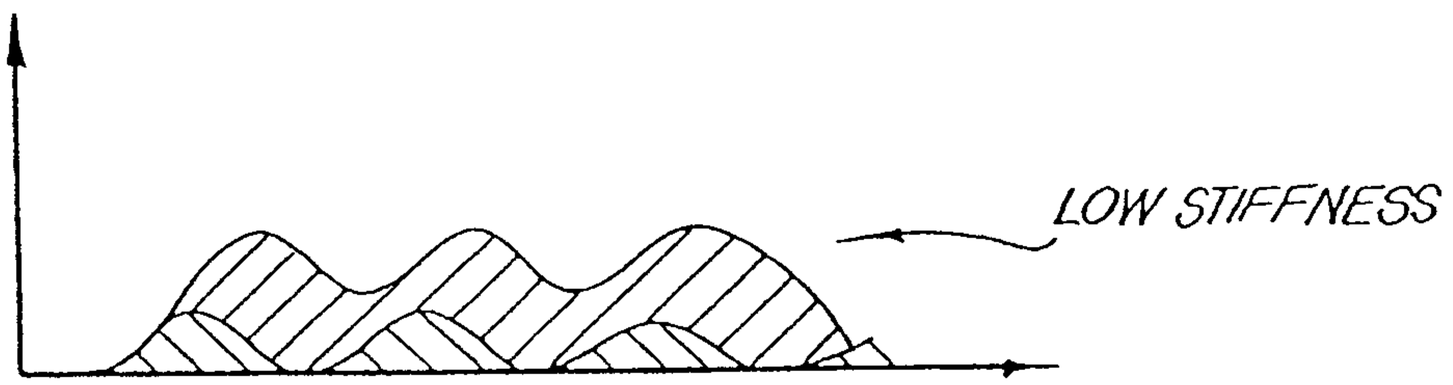

FIG. 301

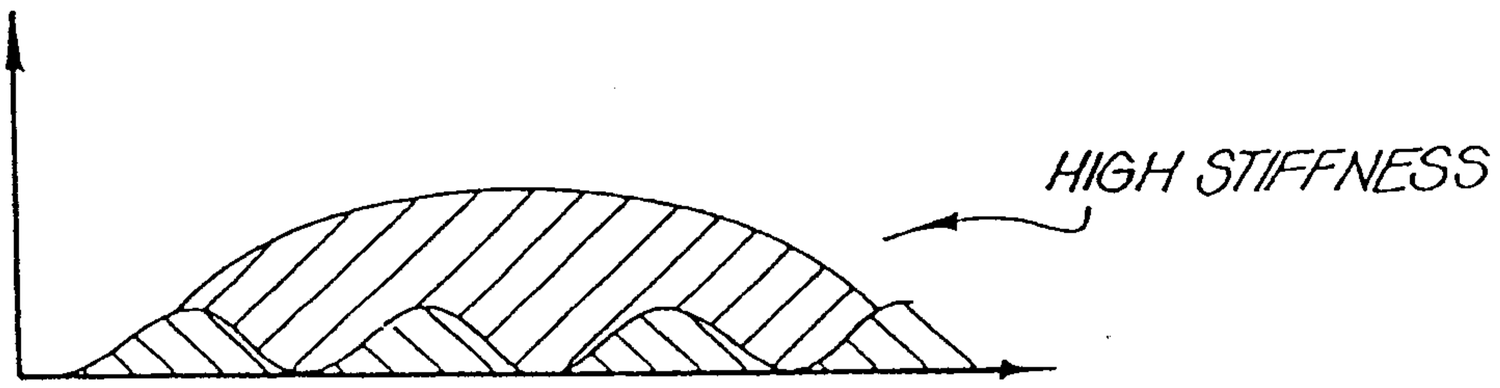

FIG. 302

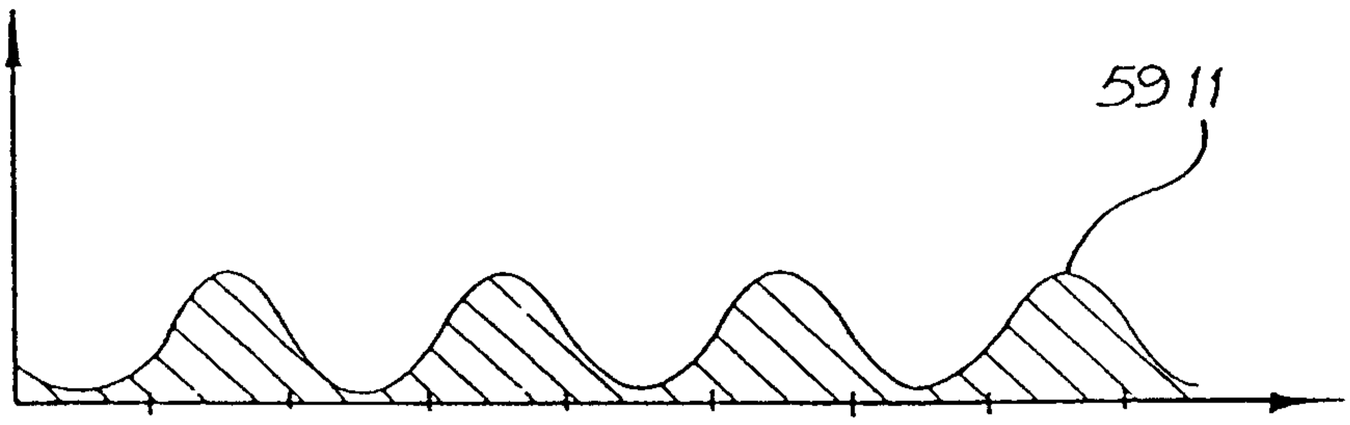

FIG. 303

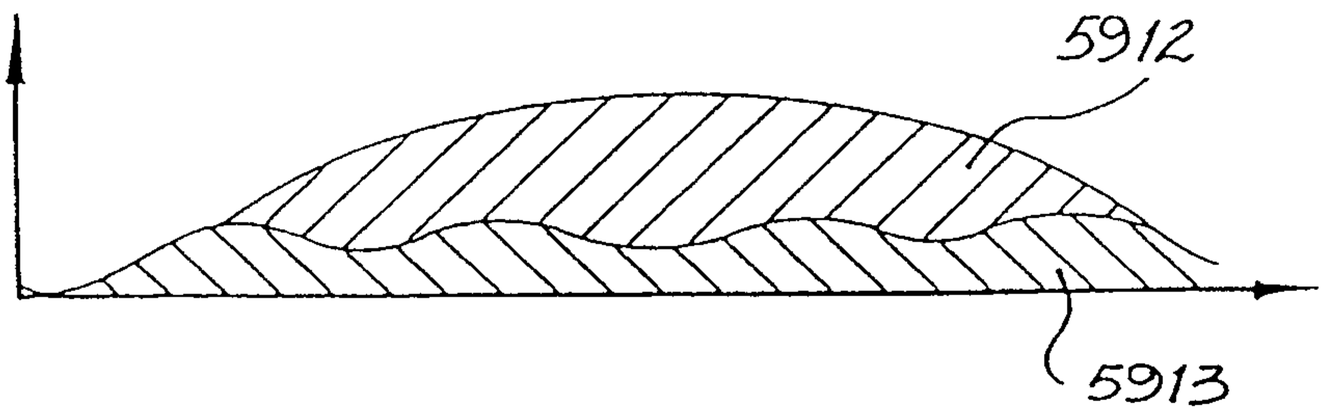

FIG. 304

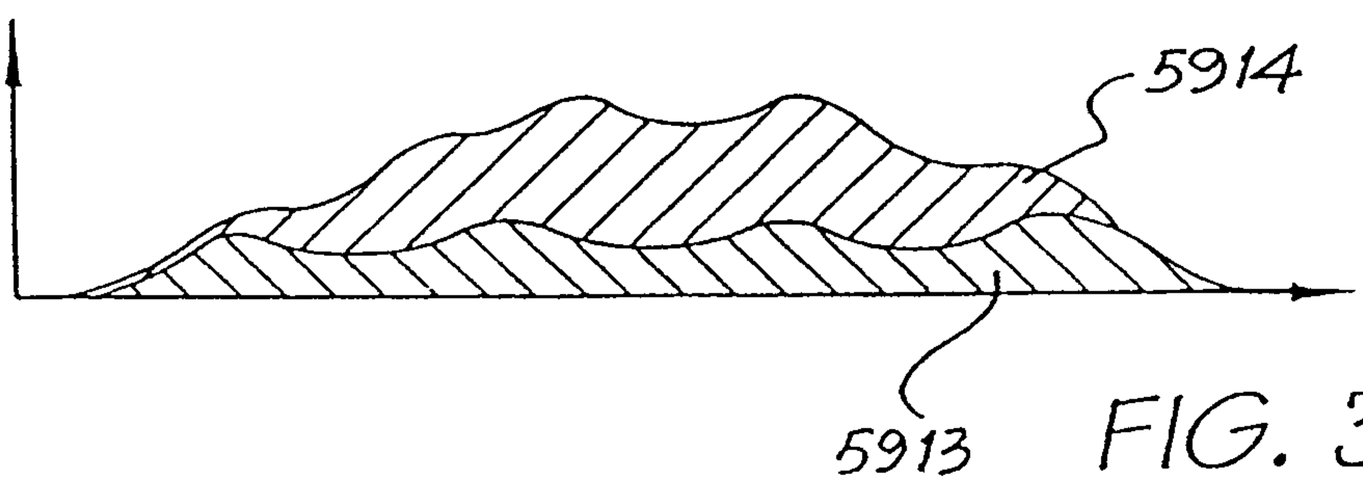

FIG. 305

213 / 246

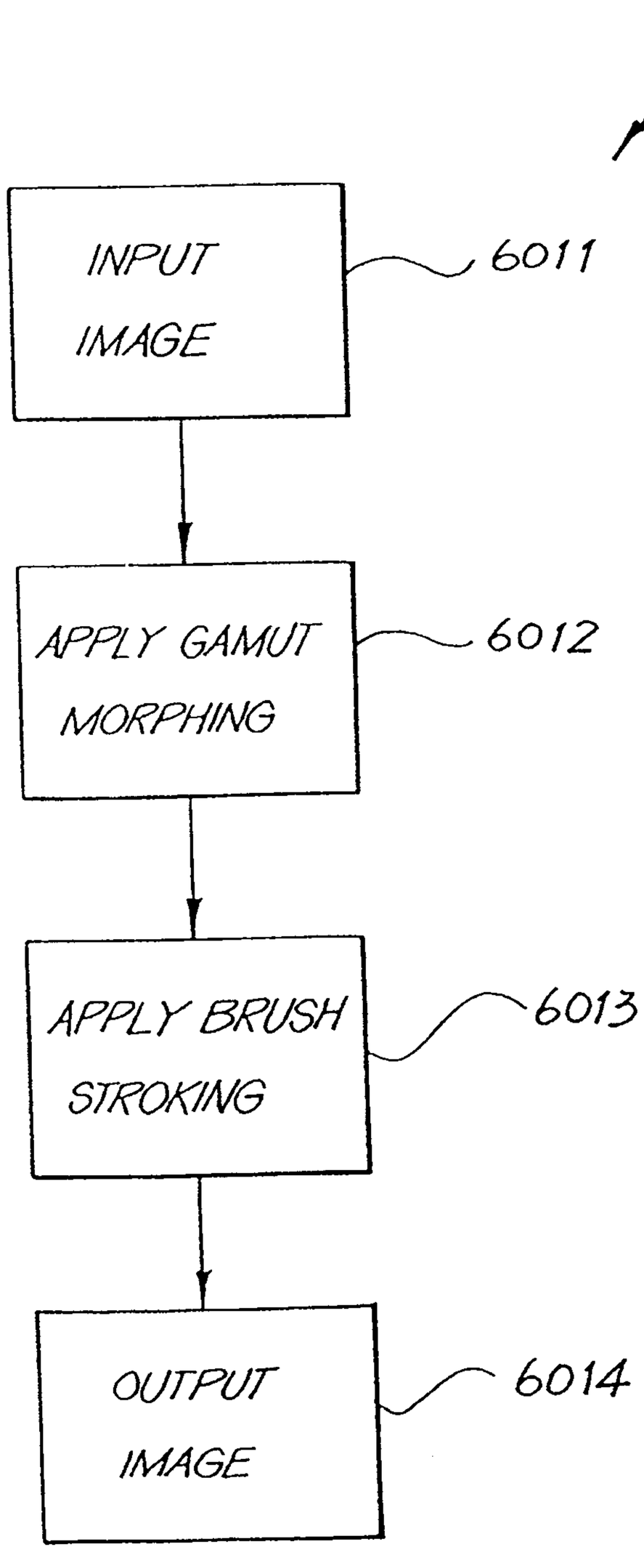

FIG. 306

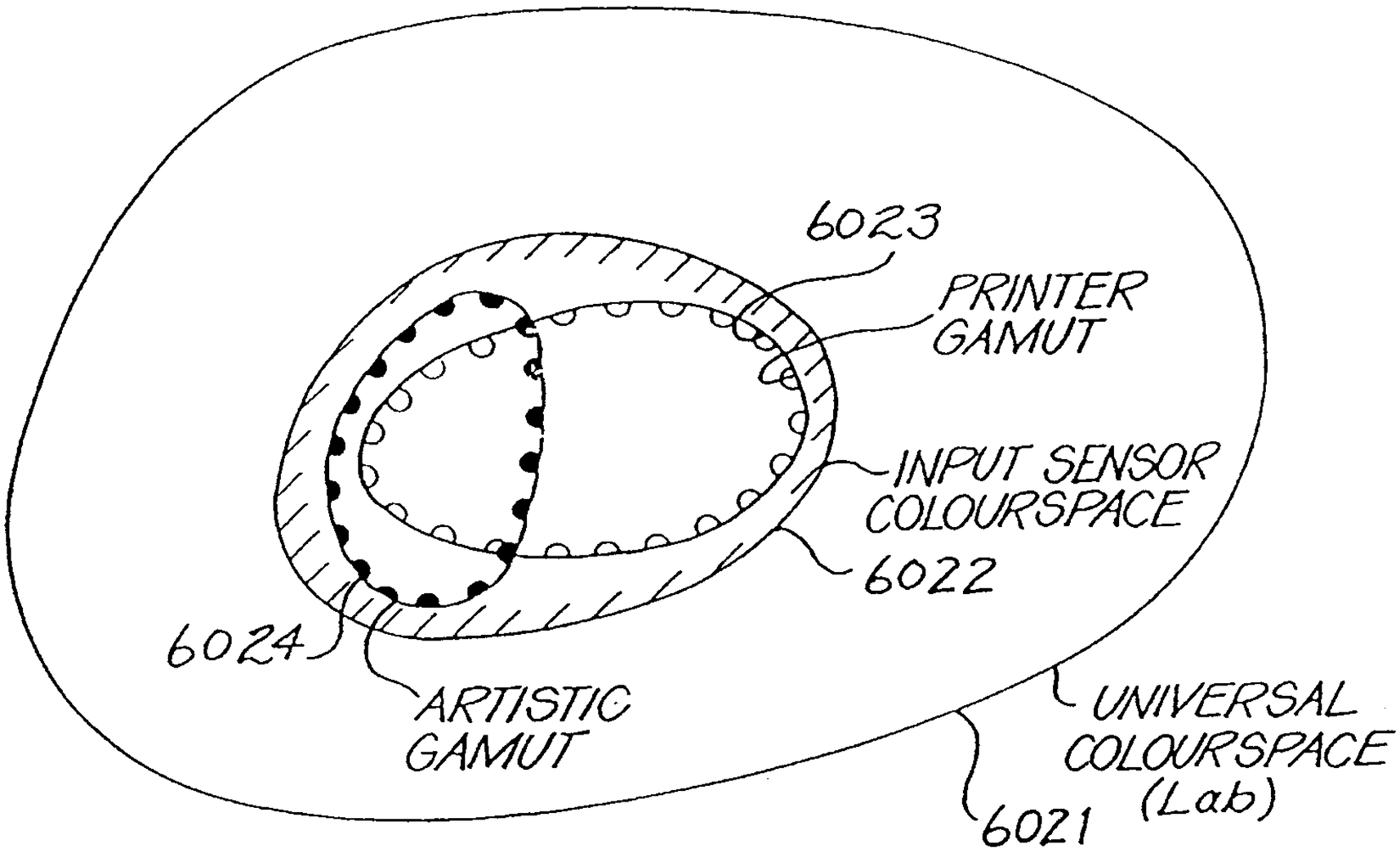
6023
PRINTER GAMUT
INPUT SENSOR COLOURSPACE
6022
6024
ARTISTIC GAMUT
UNIVERSAL COLOURSPACE (Lab)
6021

FIG. 307

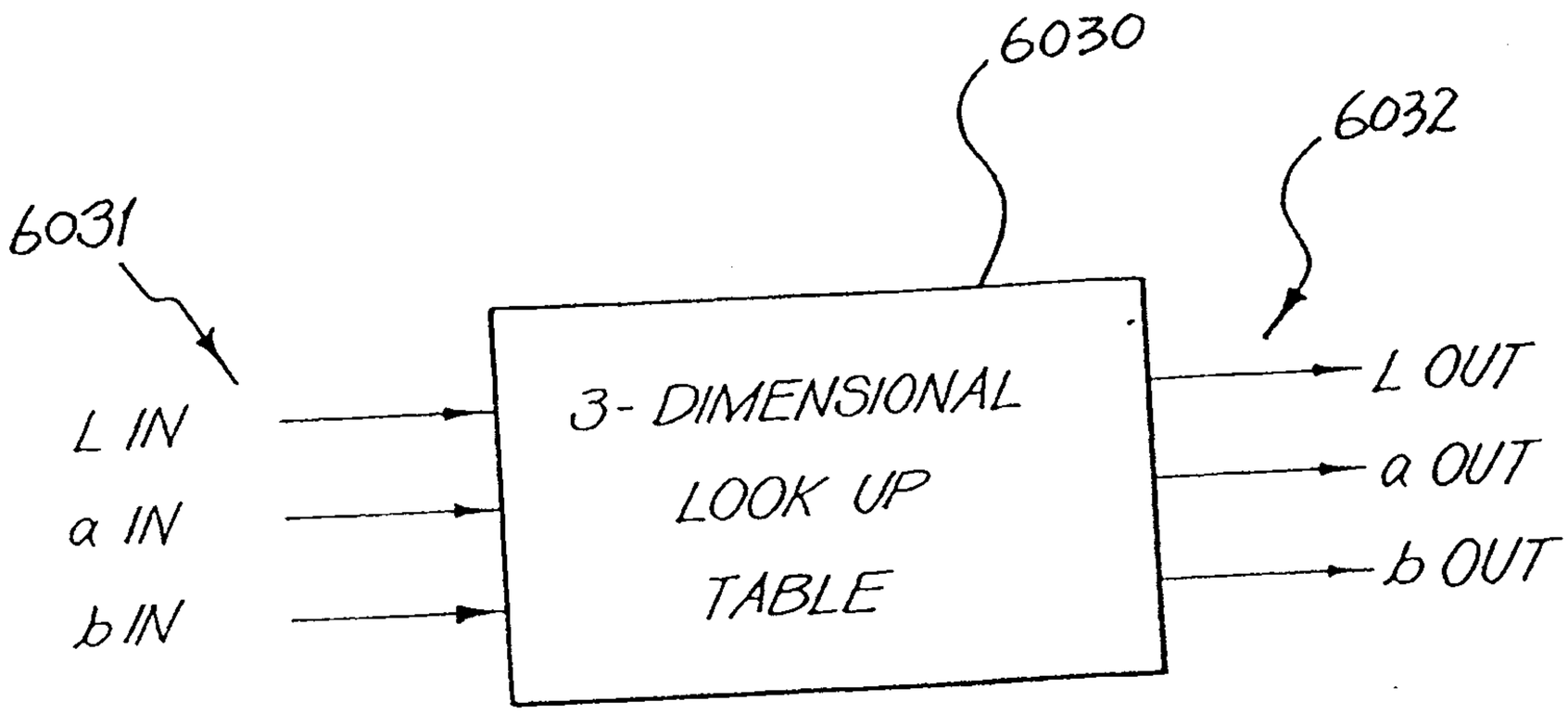
6030
6032
6031
L IN
a IN
b IN
3- DIMENSIONAL
LOOK UP
TABLE
L OUT
a OUT
b OUT

FIG. 308

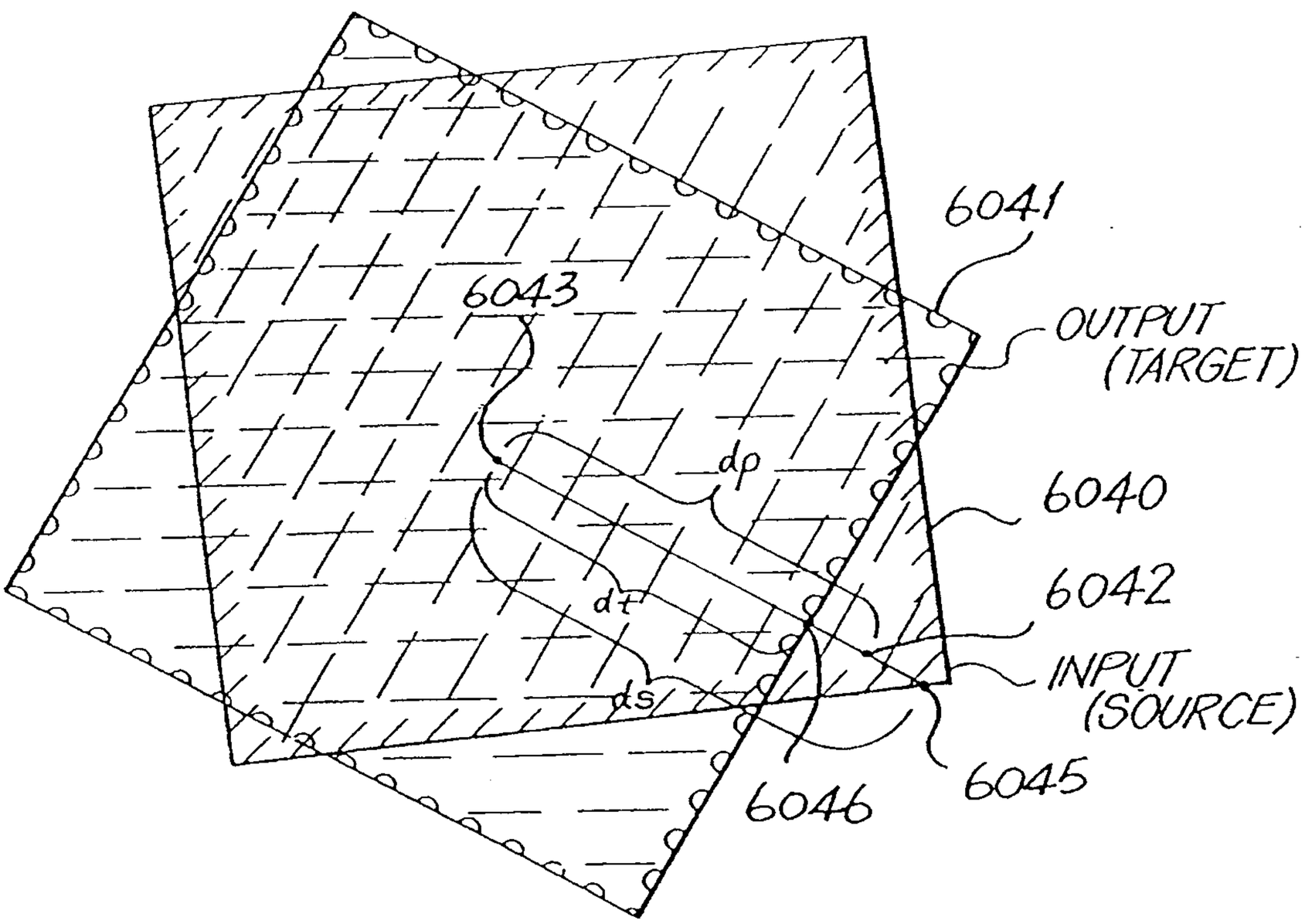
6041
6043
OUTPUT
(TARGET)
dp
6040
6042
dt
INPUT
(SOURCE)
ds
6045
6046

FIG. 309

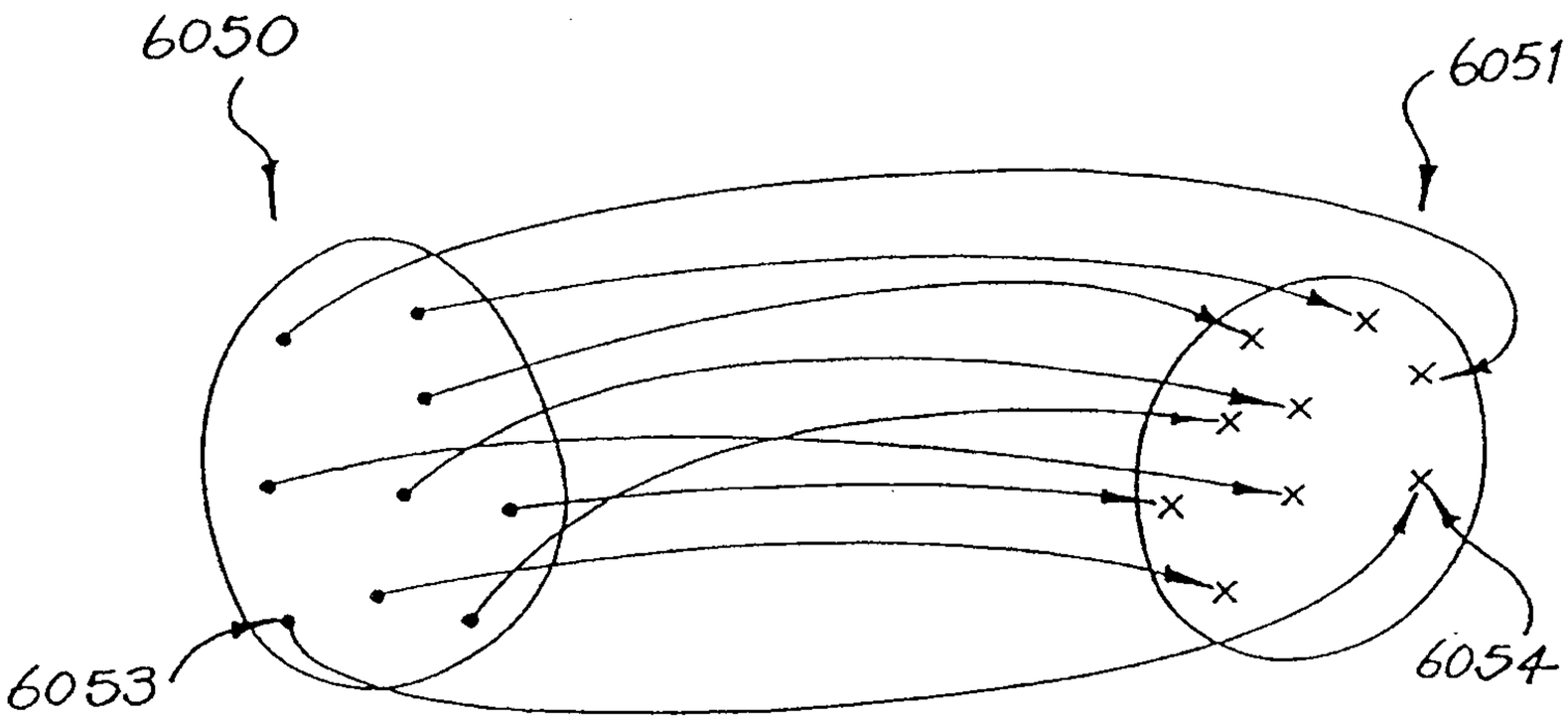

FIG. 310

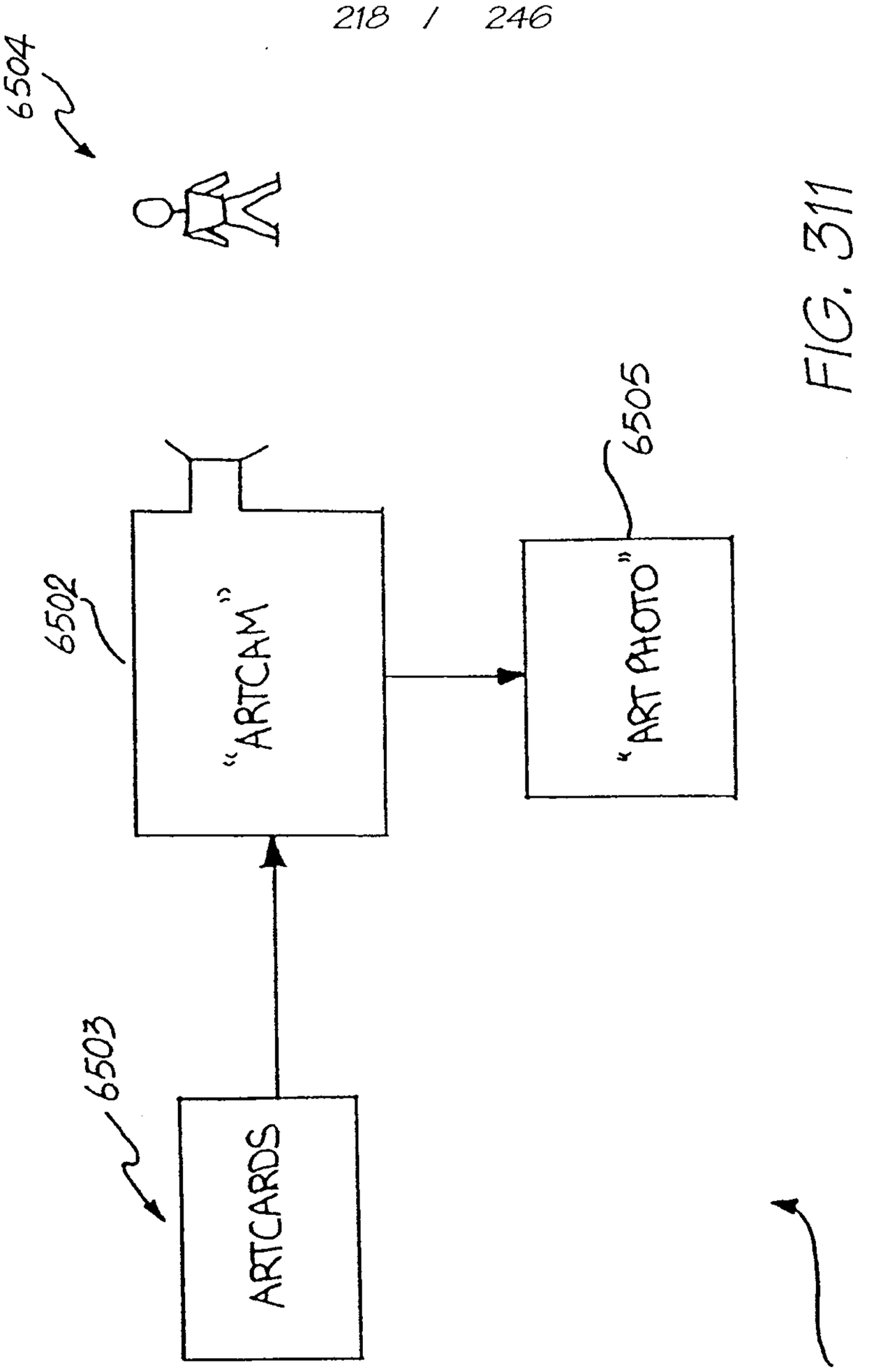

FIG. 311

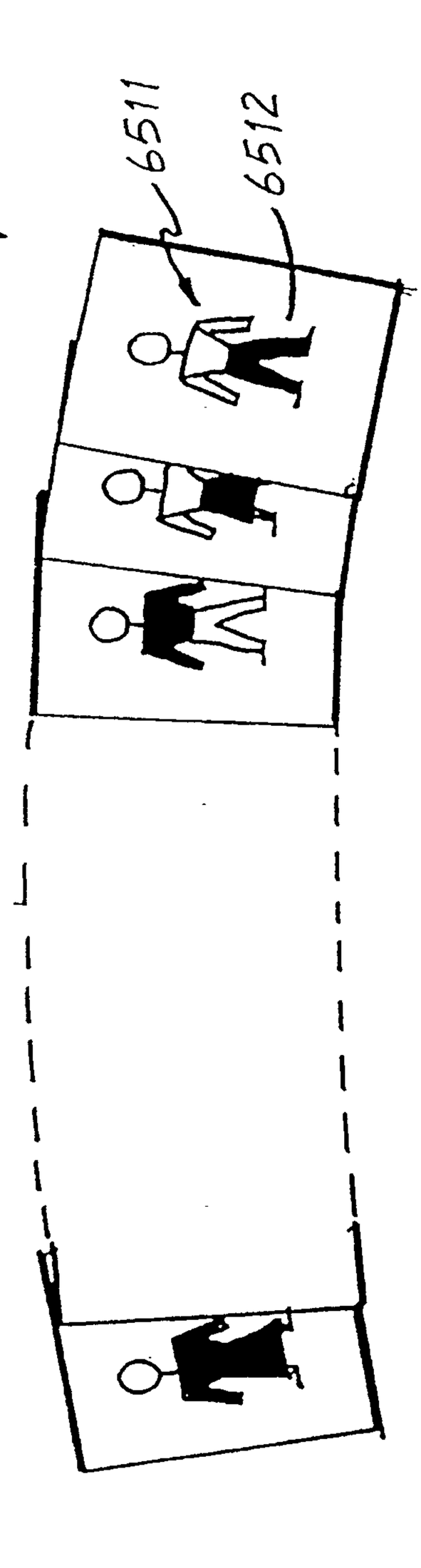

FIG. 3

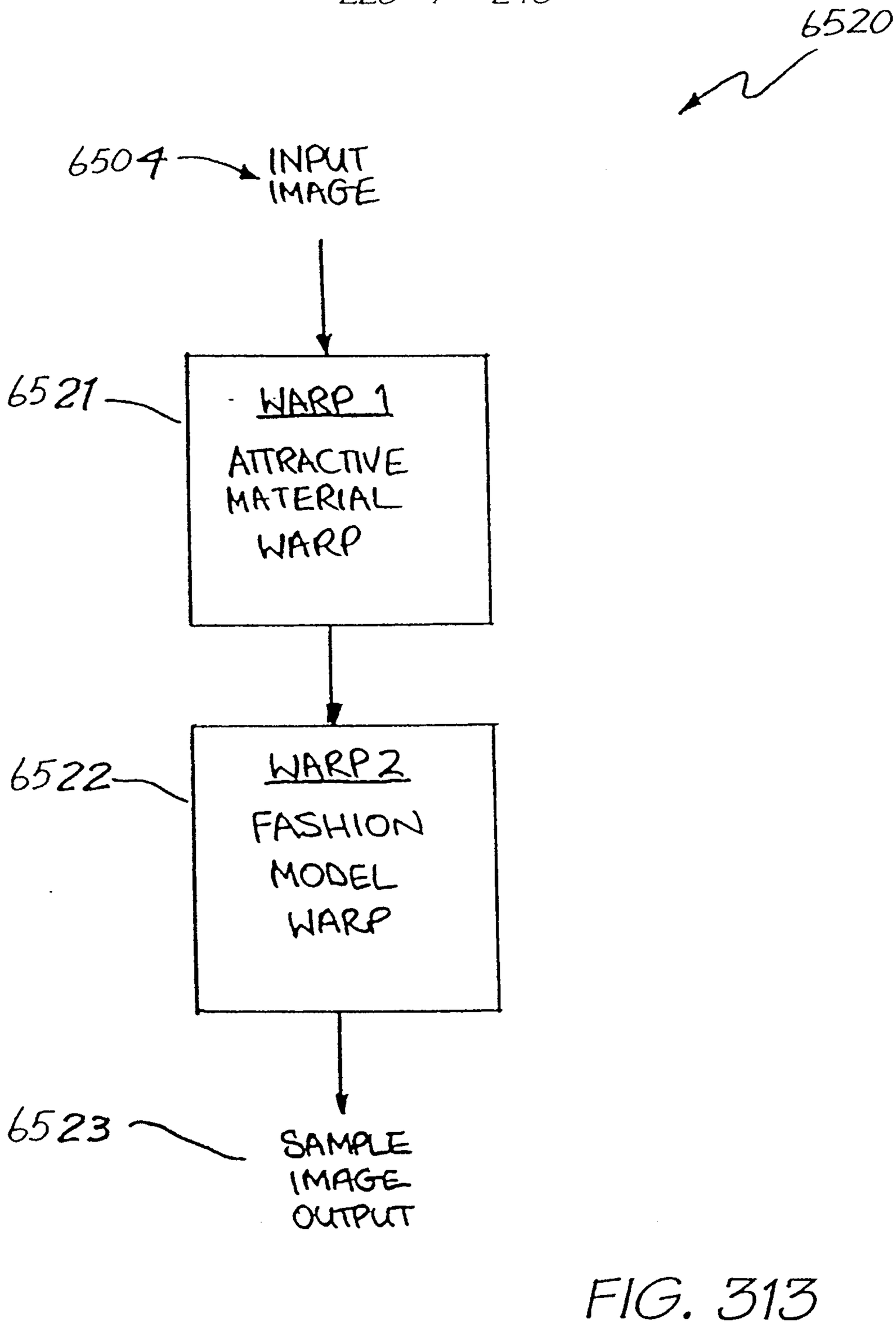
6520
6504
INPUT IMAGE
6521
WARP 1
ATTRACTIVE MATERIAL WARP
6522
WARP 2
FASHION MODEL WARP
6523
SAMPLE IMAGE OUTPUT

FIG. 313

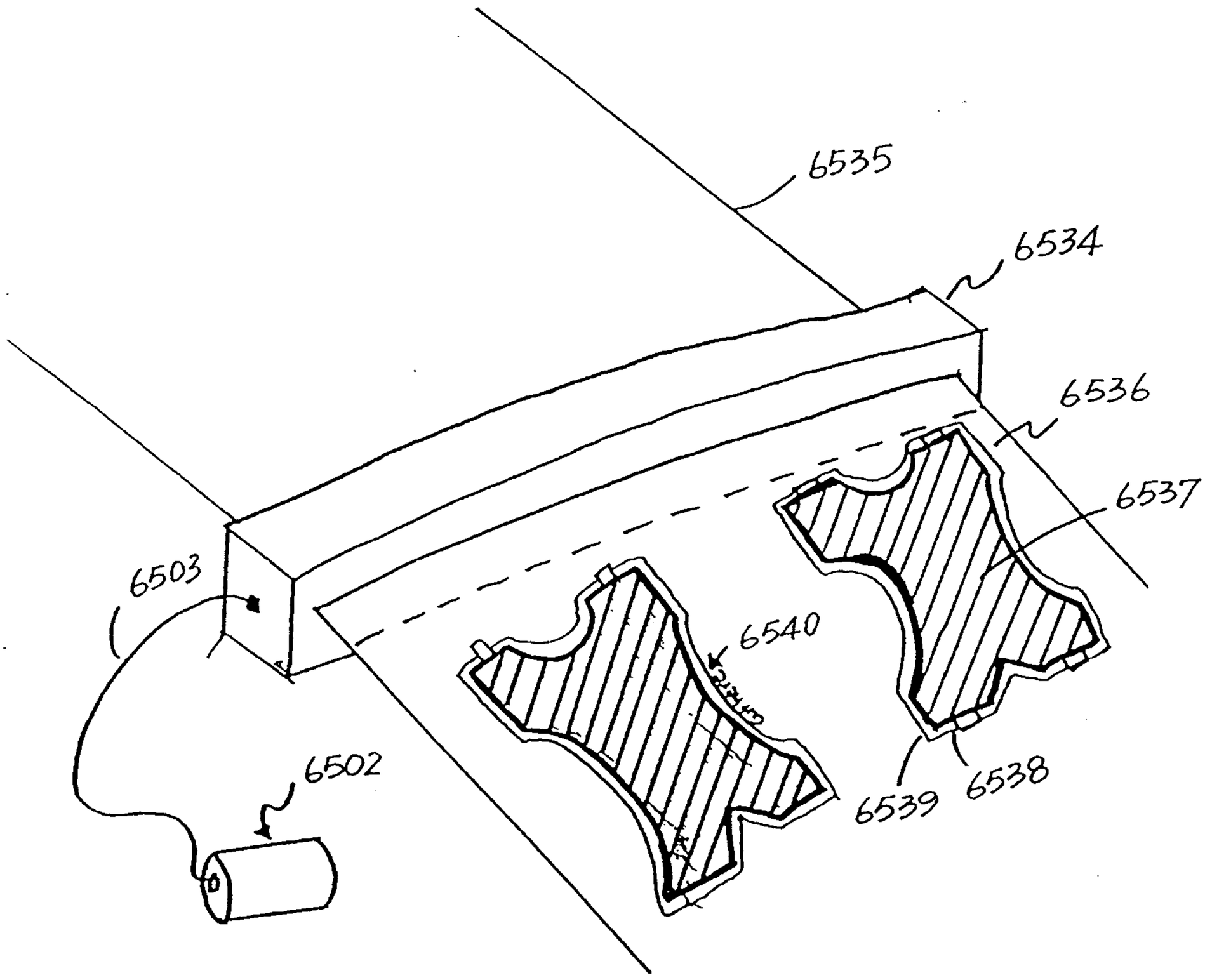

FIG. 314

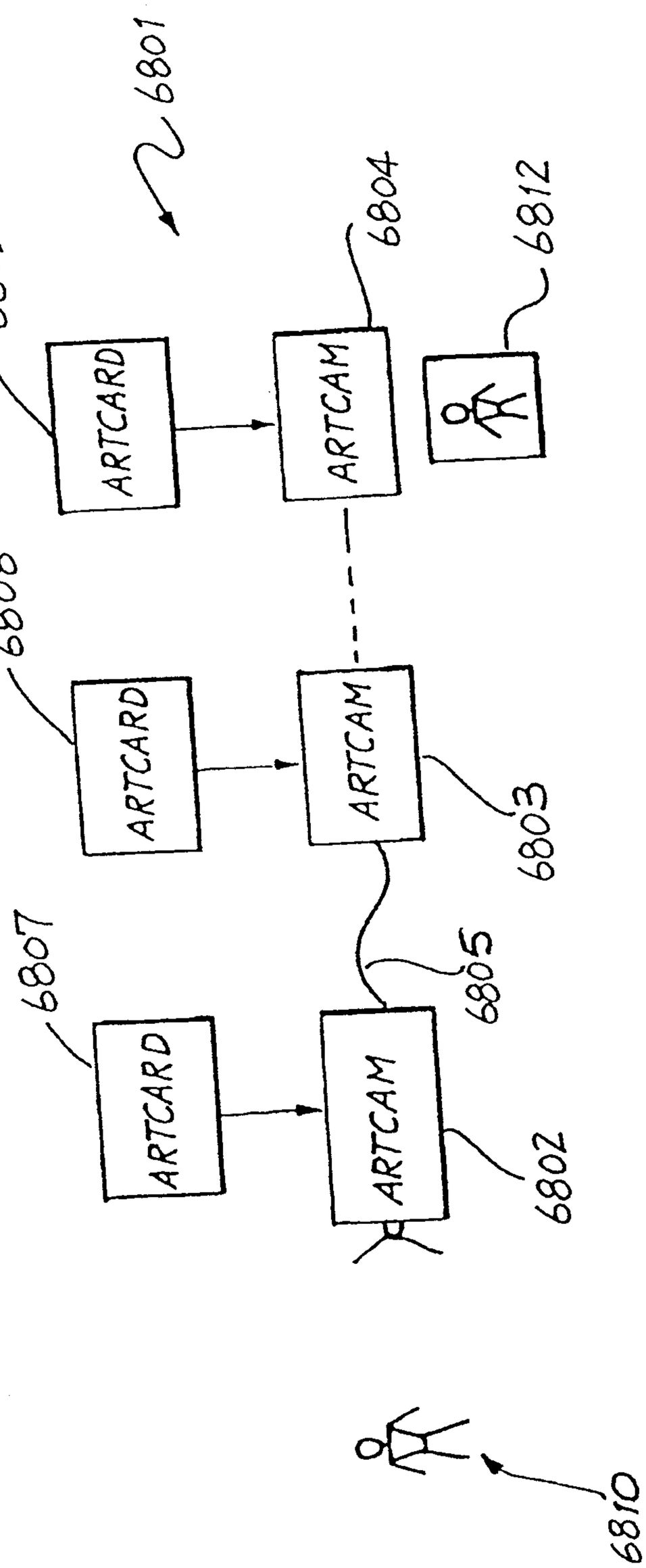
6801
6809
ARTCARD
ARTCAM
6804
6812
6808
ARTCARD
ARTCAM
6803
6807
ARTCARD
ARTCAM
6805
6802
10
68

FIG. 315

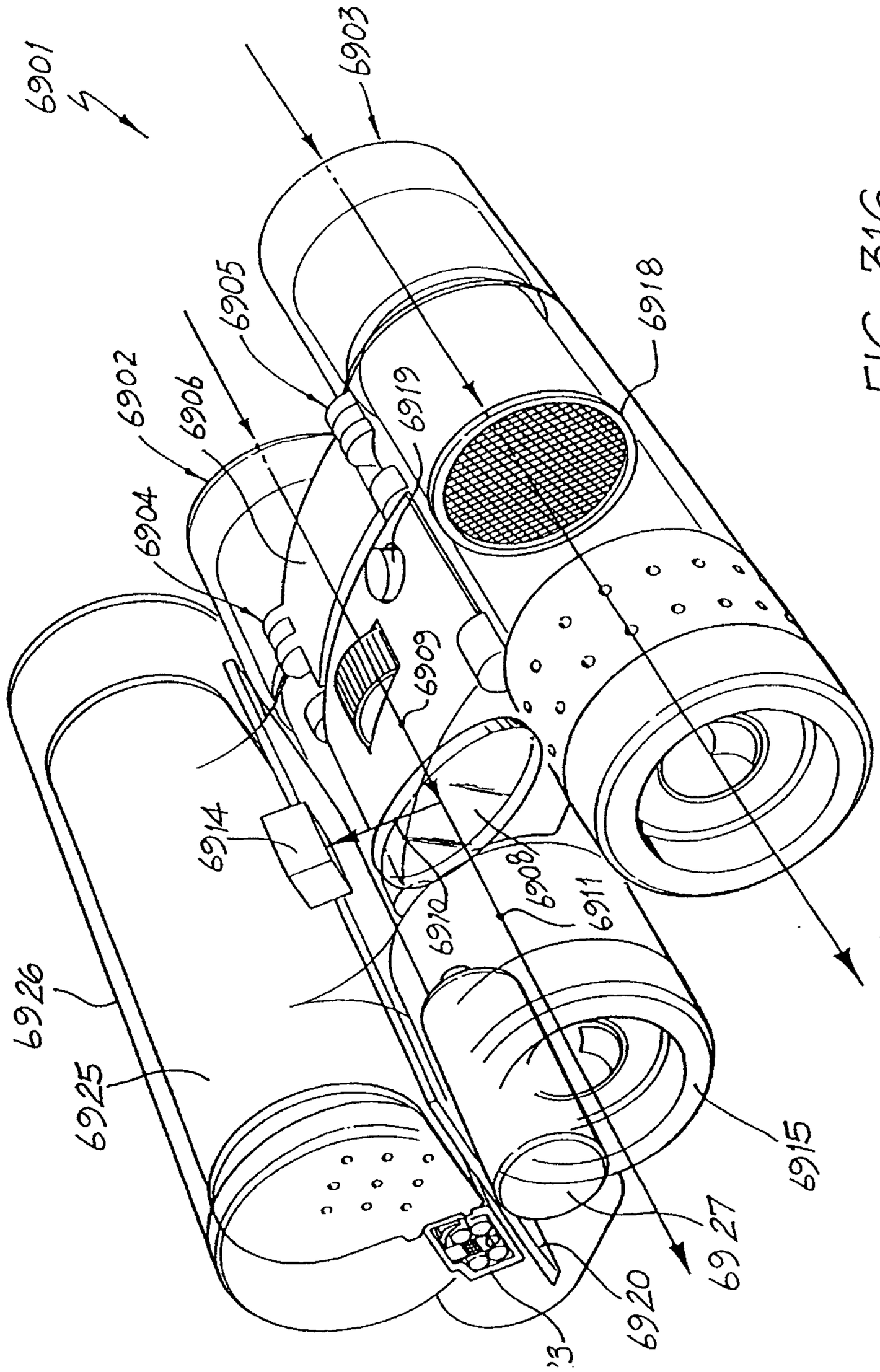
6901
6903
6905
6902
6906
6904
6916
6918
6909
6914
6908
6912
6911
6926
6925
6915
6927
6920
6923

FIG. 316

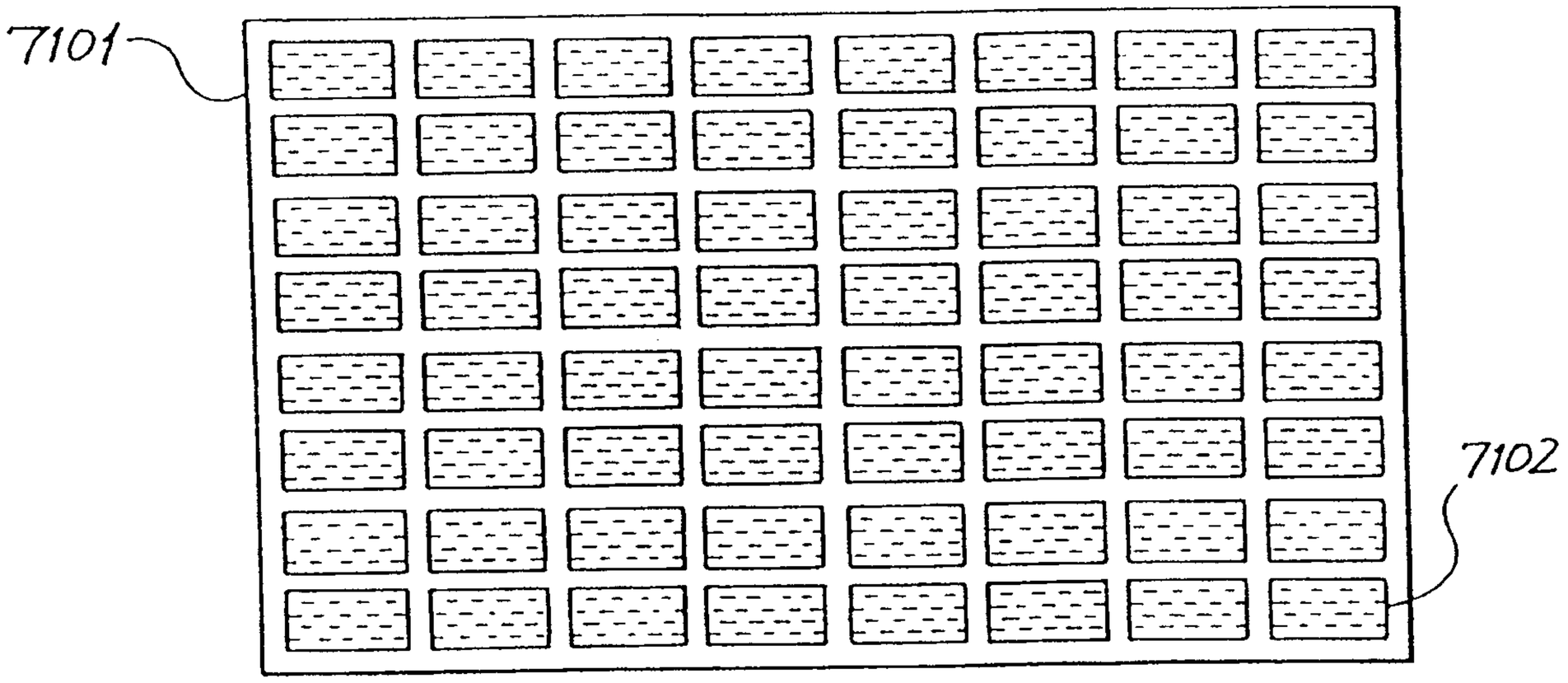

FIG. 317

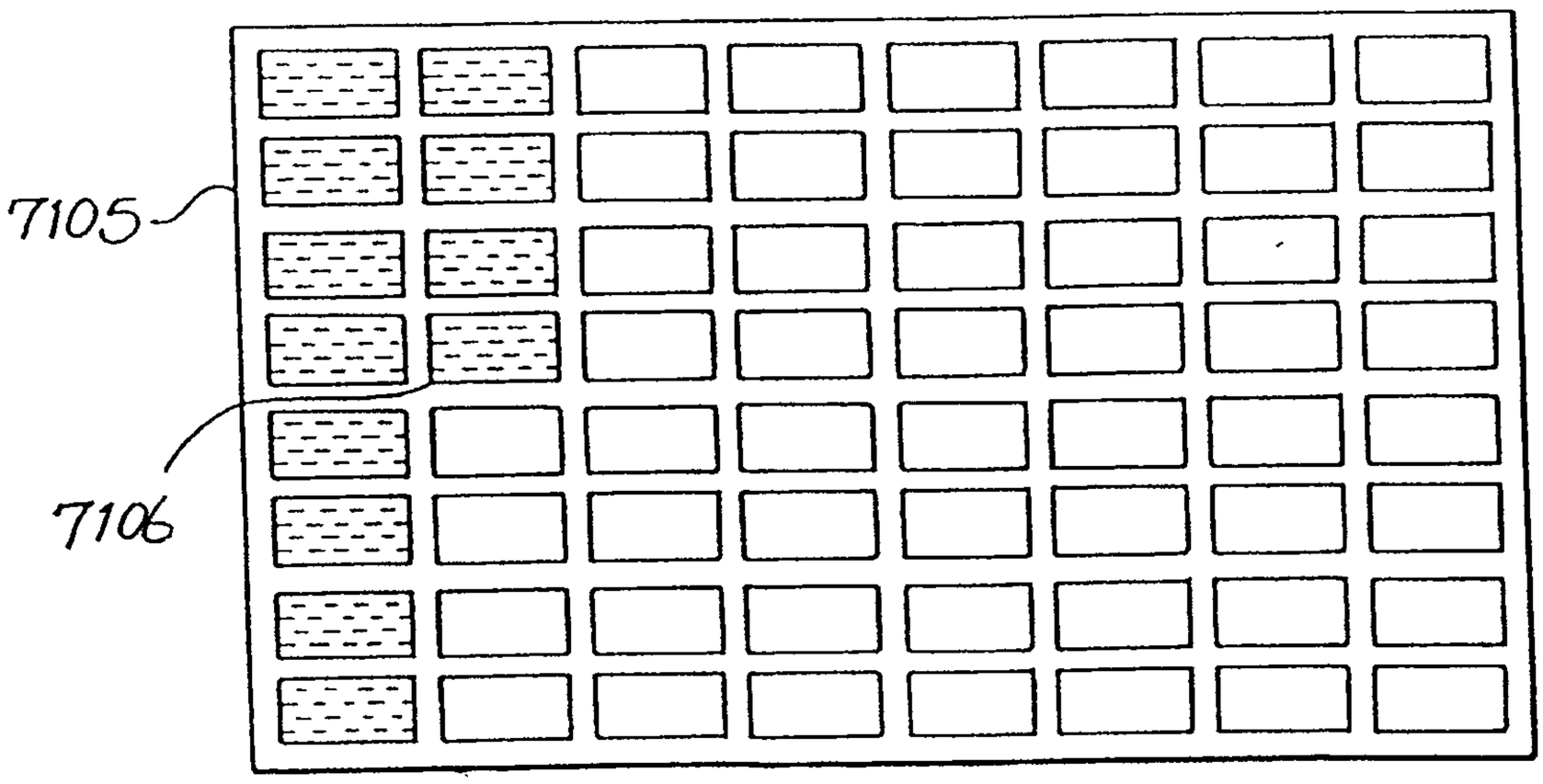

FIG. 318

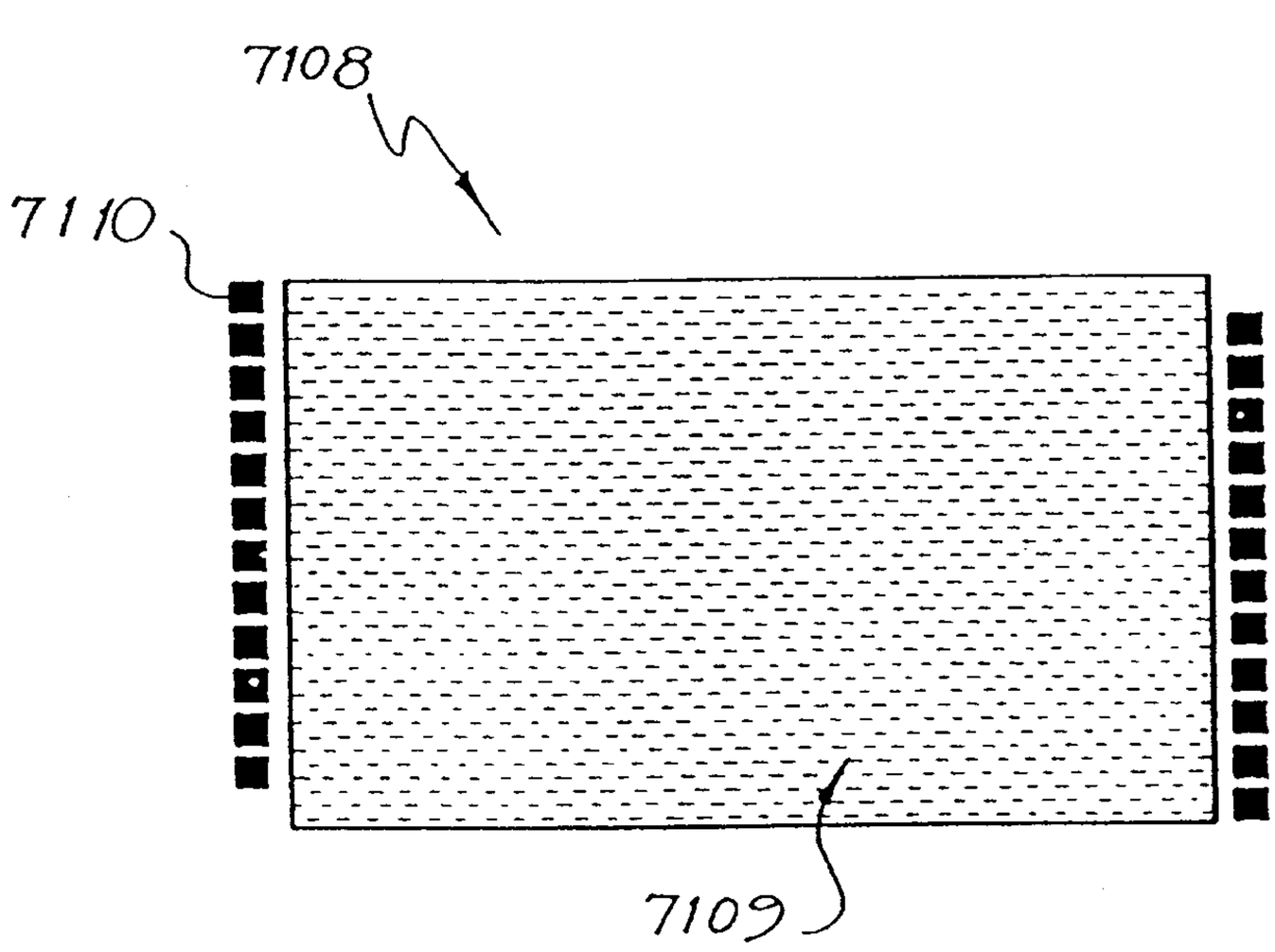

FIG. 319

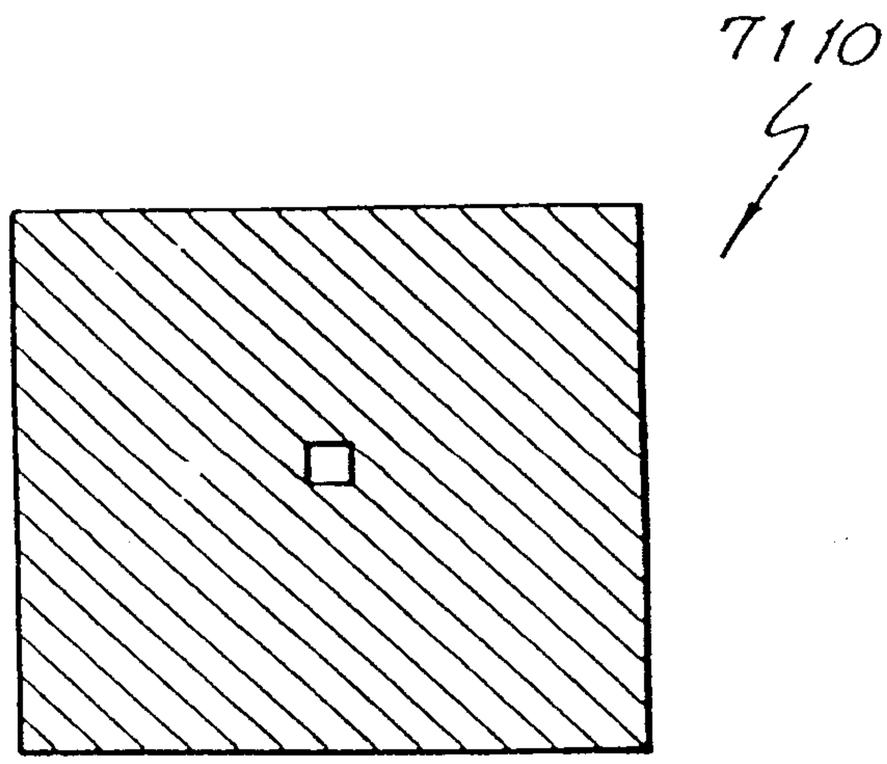

FIG. 320

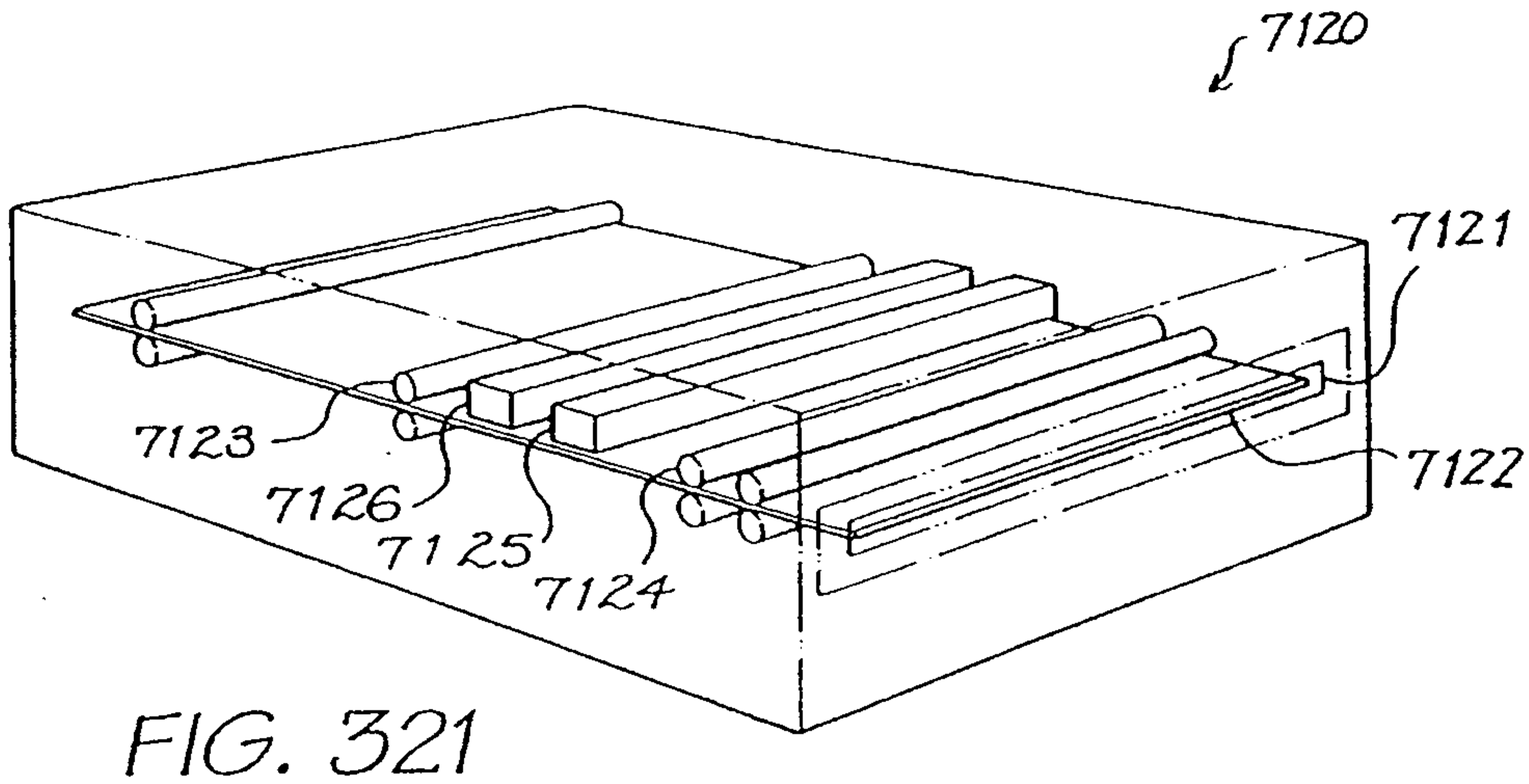

FIG. 321

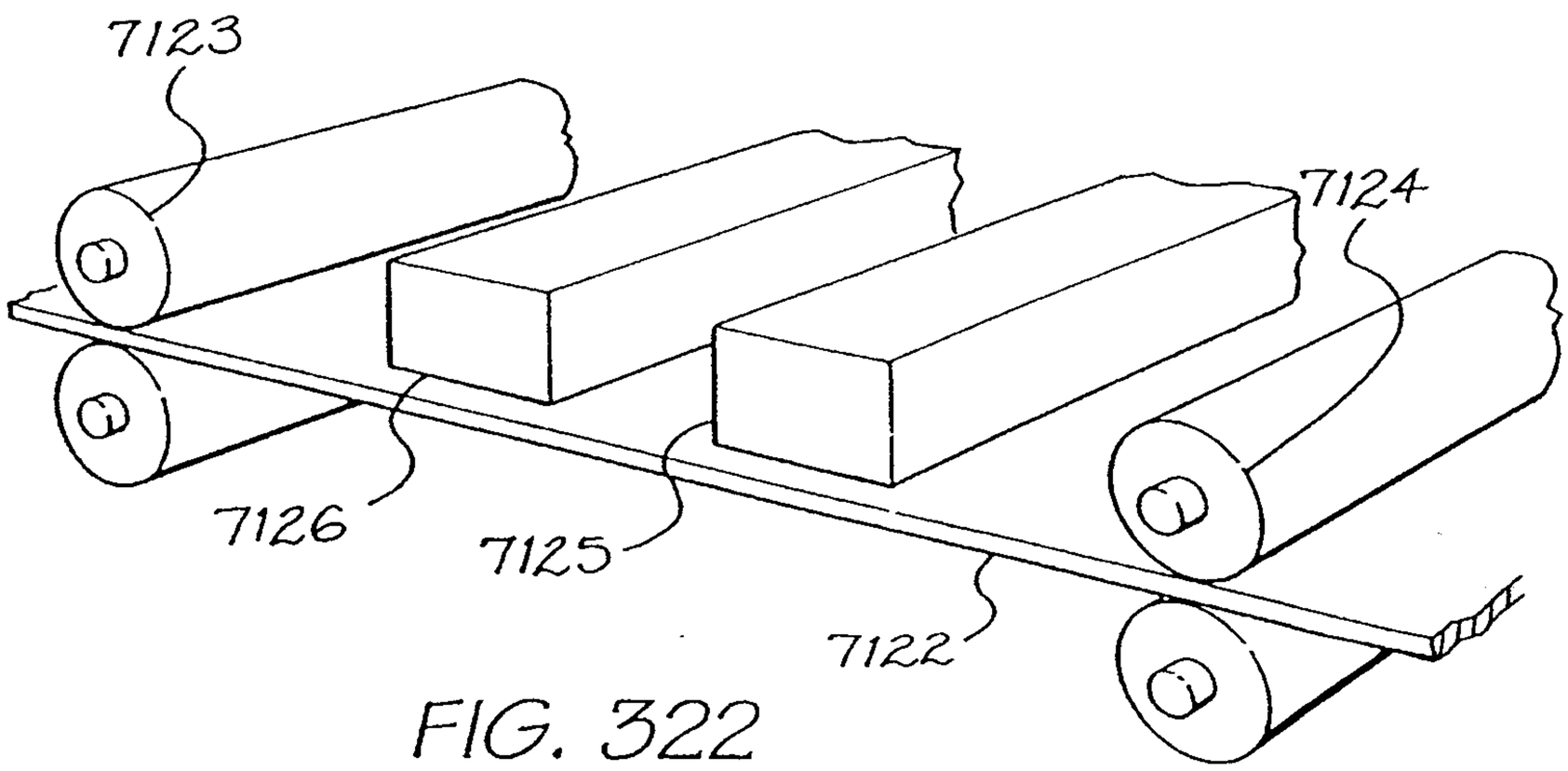

FIG. 322

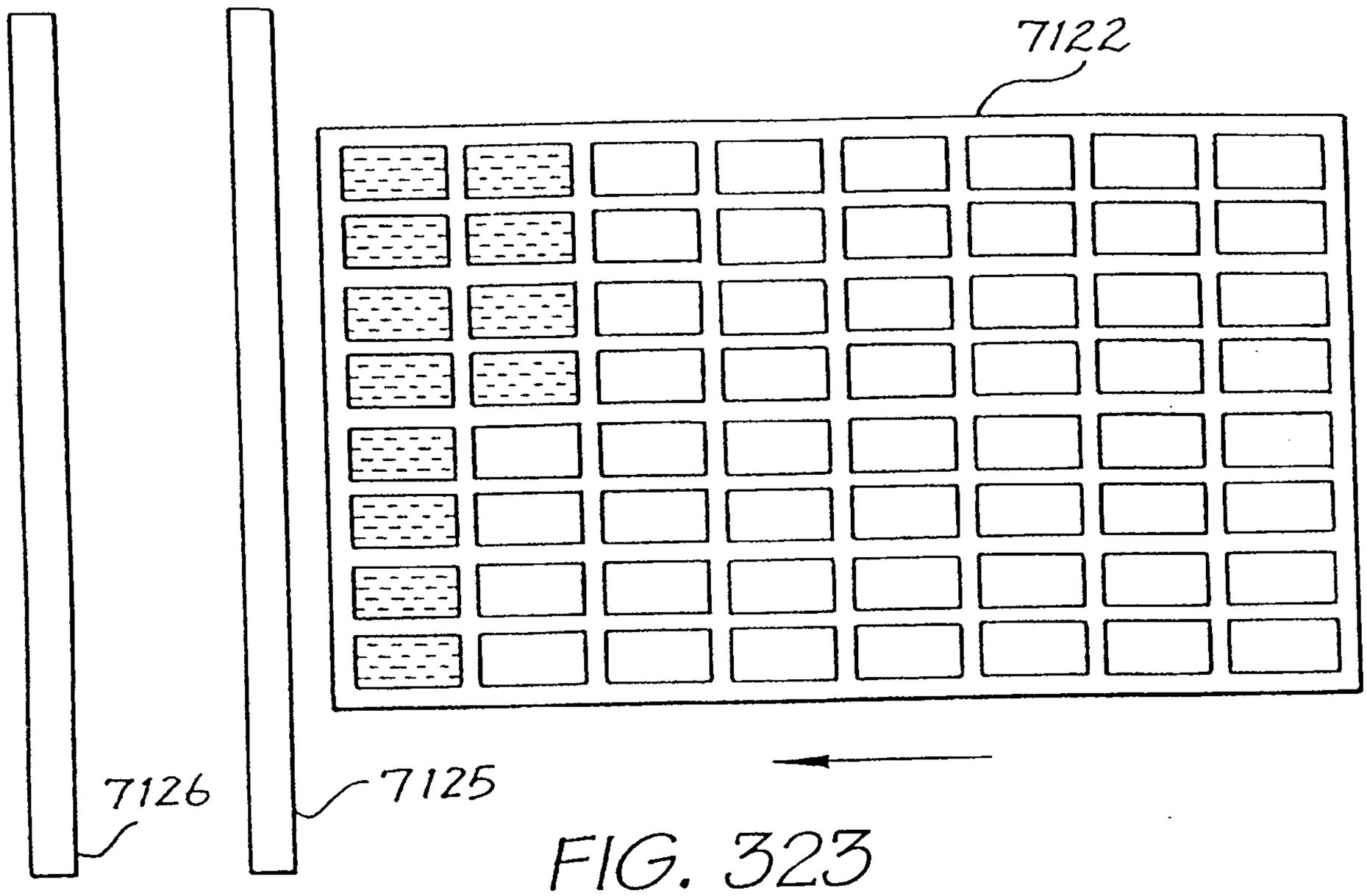

FIG. 323

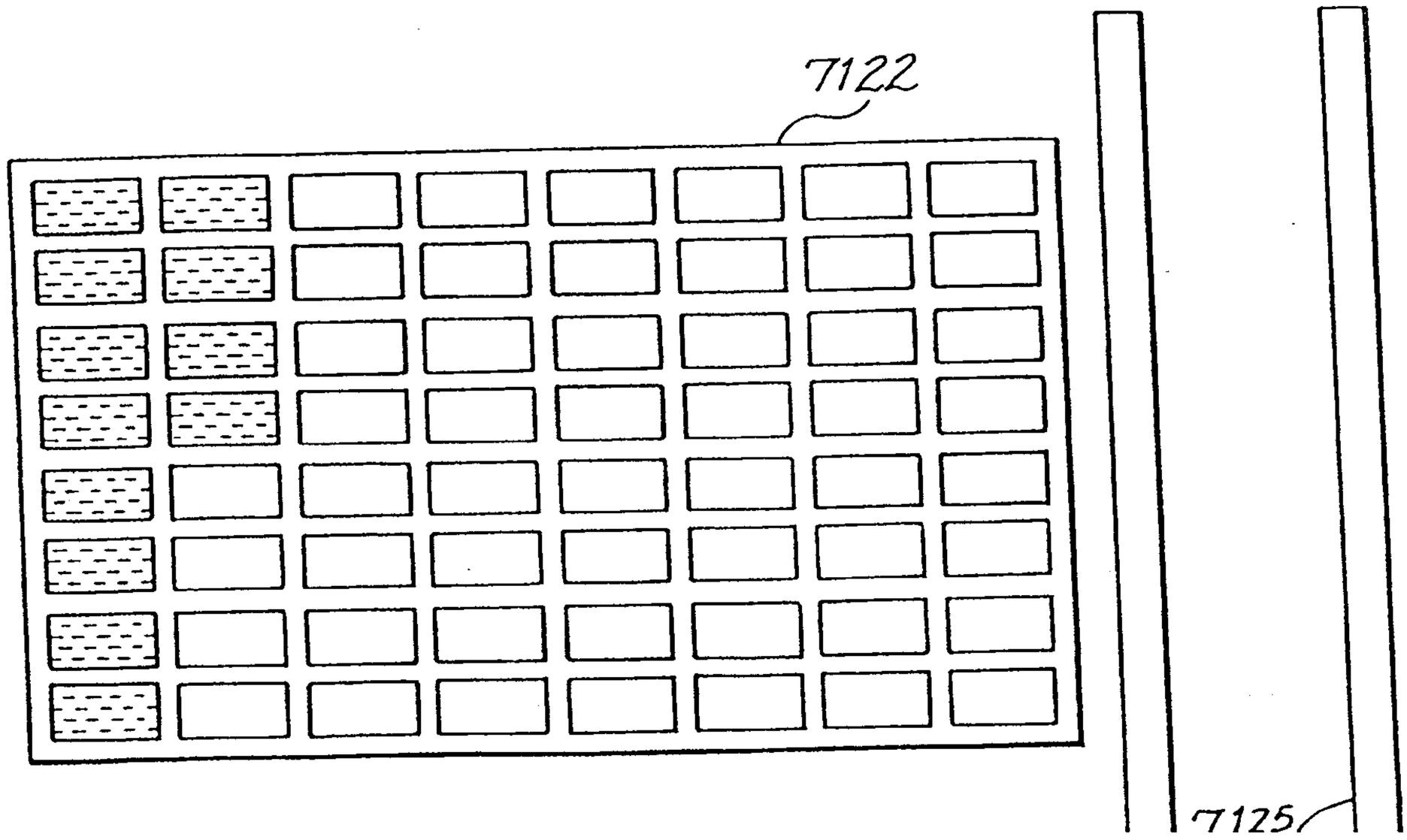

228 / 246

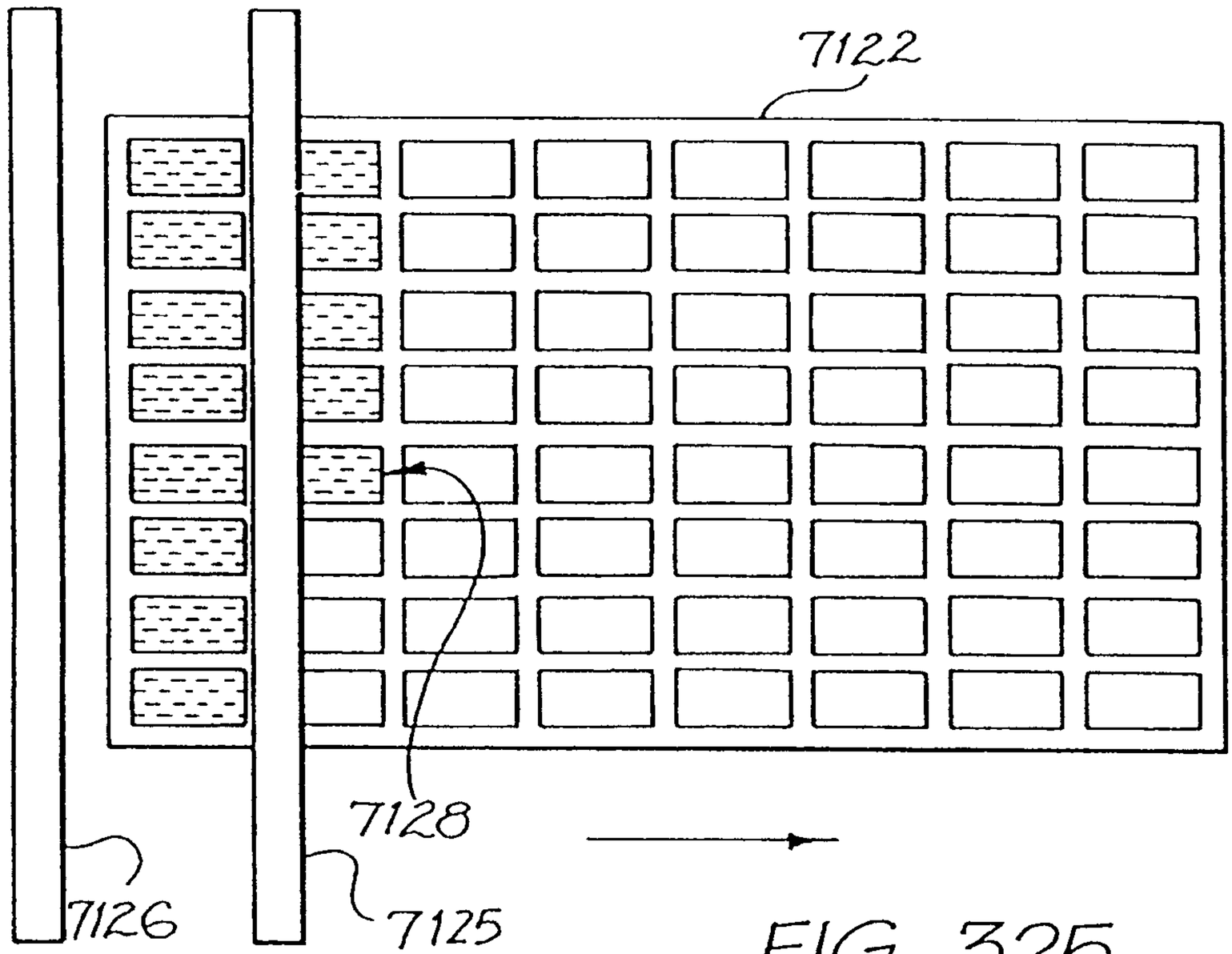

FIG. 325

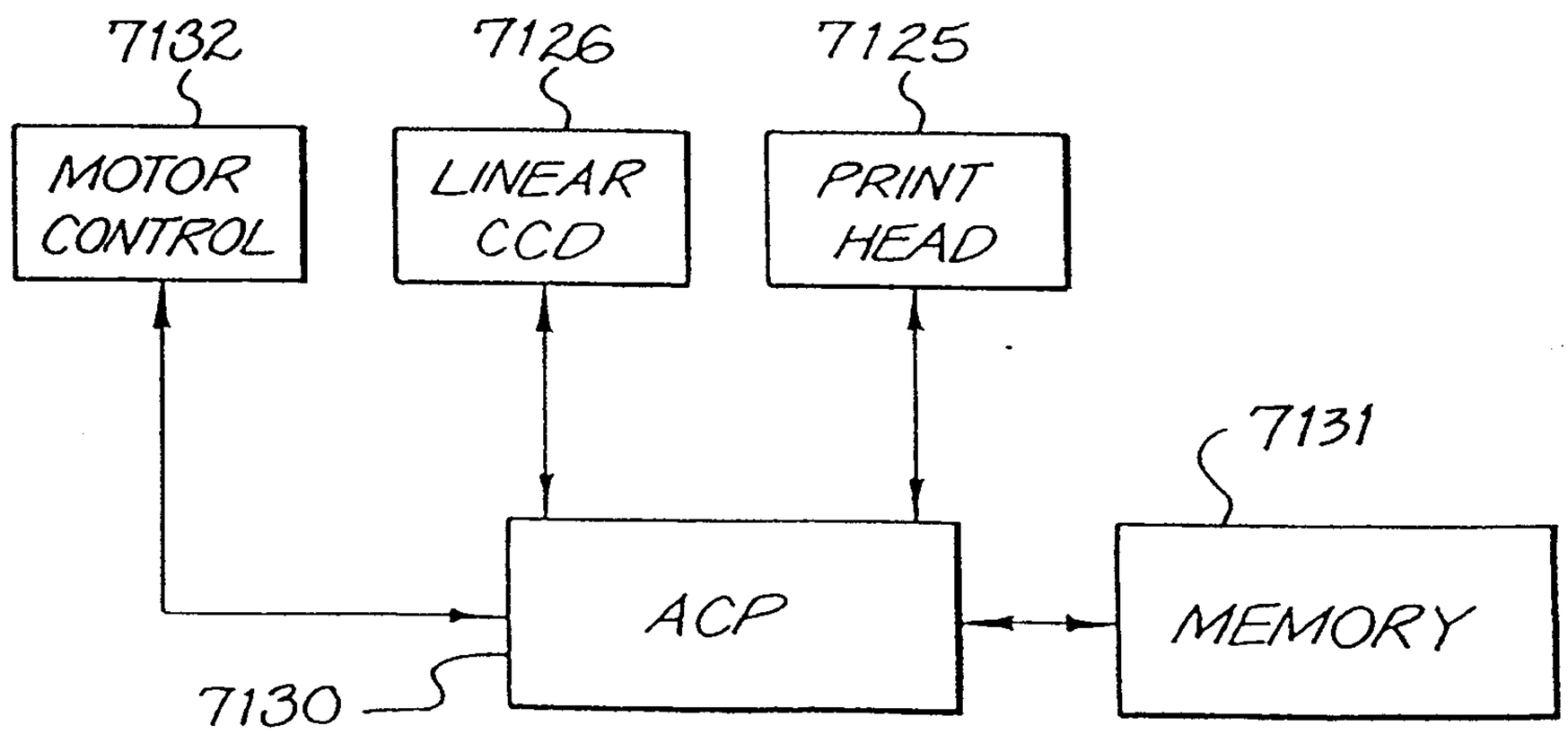

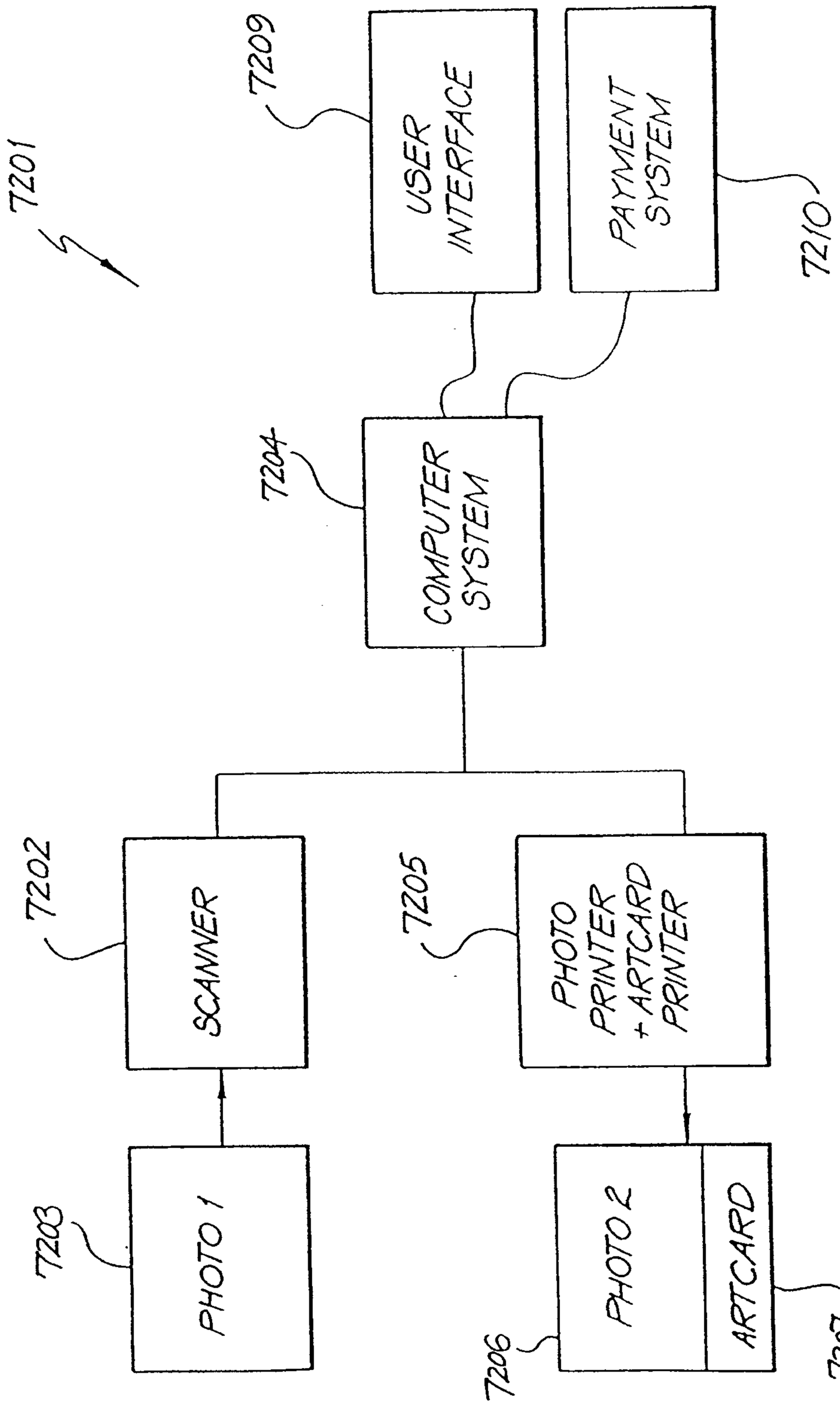
7201
7209
USER INTERFACE
PAYMENT SYSTEM
7210
7204
COMPUTER SYSTEM
7202
SCANNER
7205
PHOTO PRINTER + ARTCARD PRINTER
7203
PHOTO 1
7206
PHOTO 2
ARTCARD
7207

FIG. 327

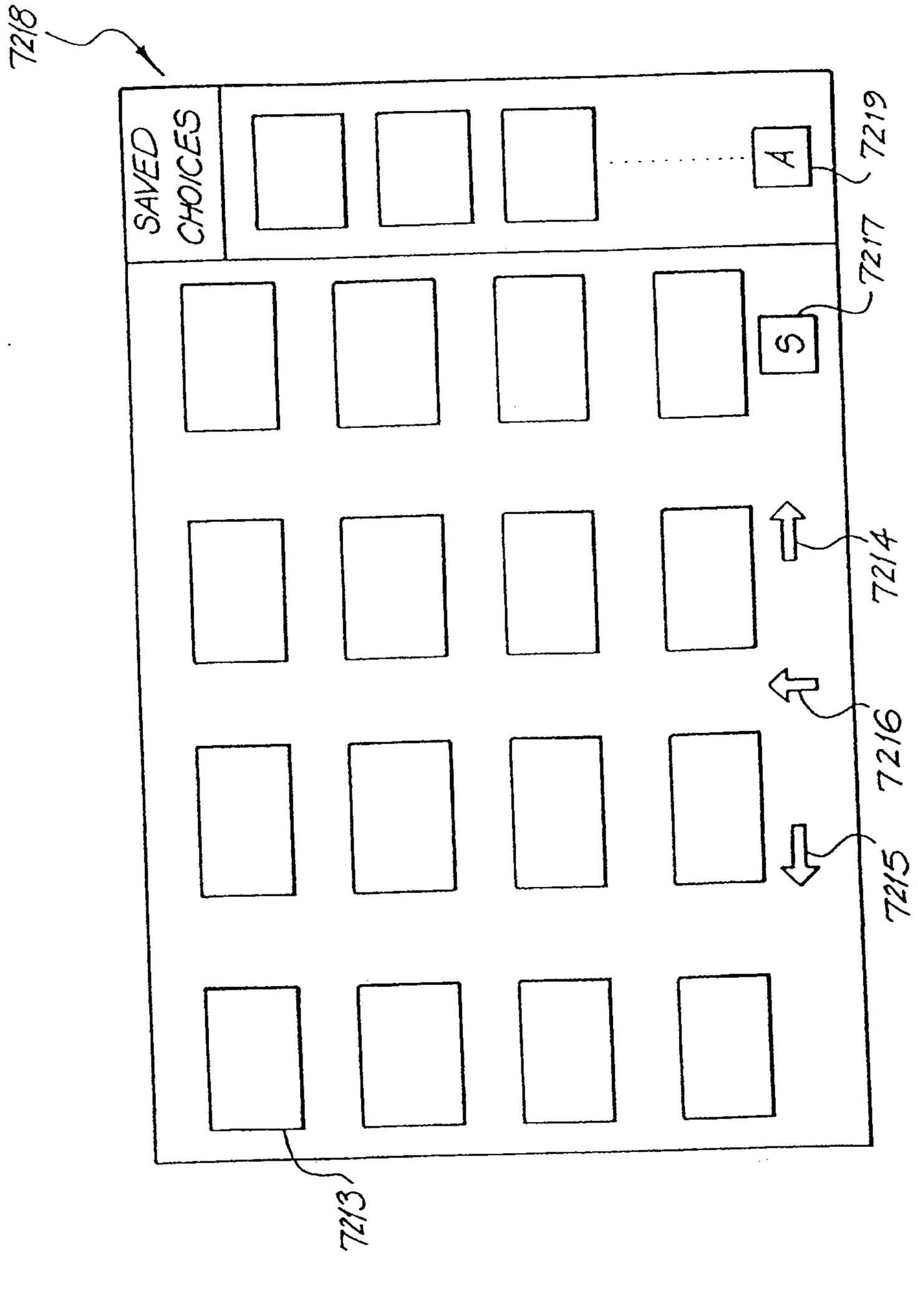

FIG. 328

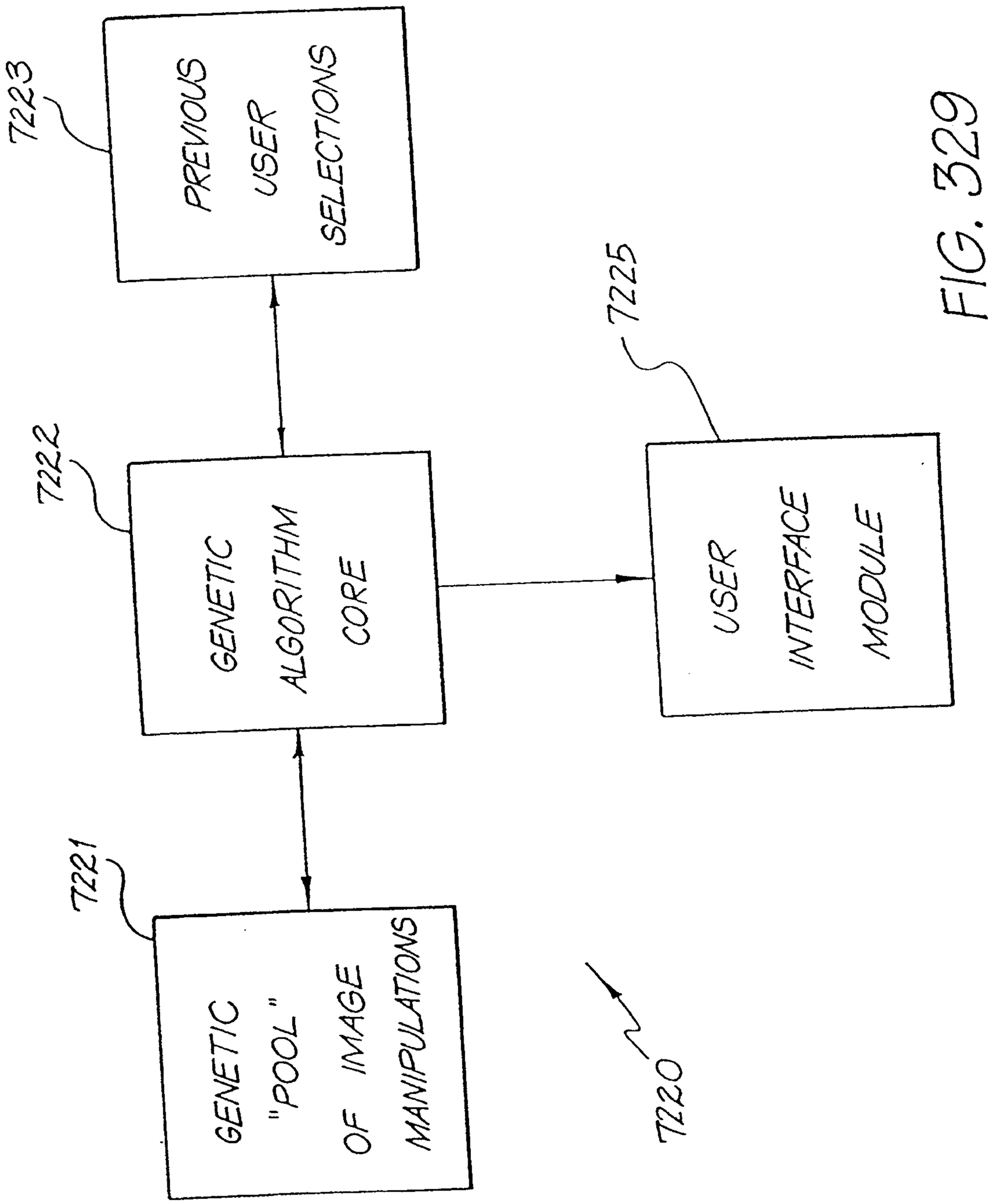
7223
PREVIOUS USER SELECTIONS
7222
GENETIC ALGORITHM CORE
7221
GENETIC "POOL" OF IMAGE MANIPULATIONS
7225
USER INTERFACE MODULE
7220

FIG. 329

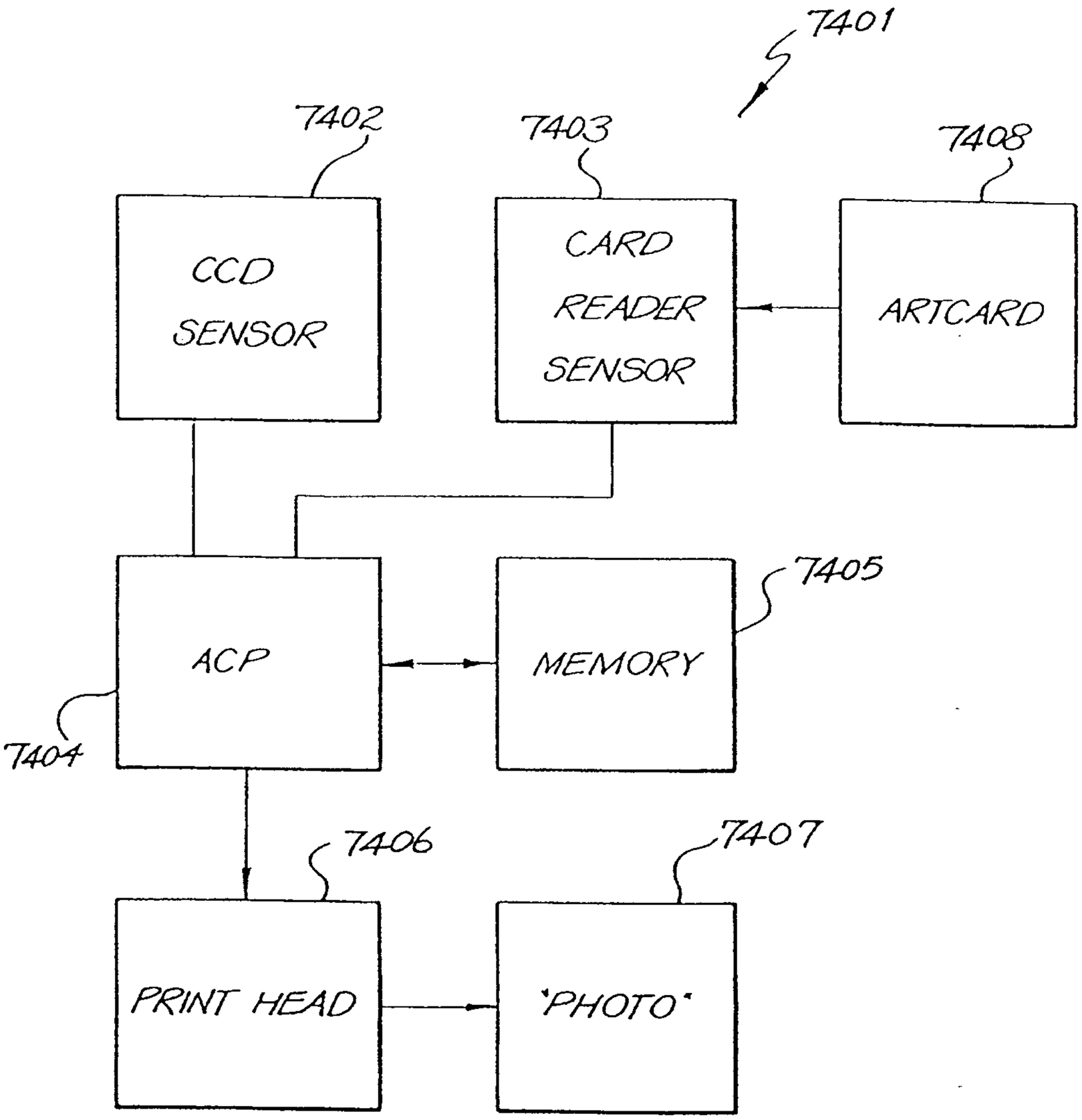
7401
7402
CCD SENSOR
7403
CARD READER SENSOR
7408
ARTCARD
7405
ACP
MEMORY
7404
7406
7407
PRINT HEAD
"PHOTO"

FIG. 330

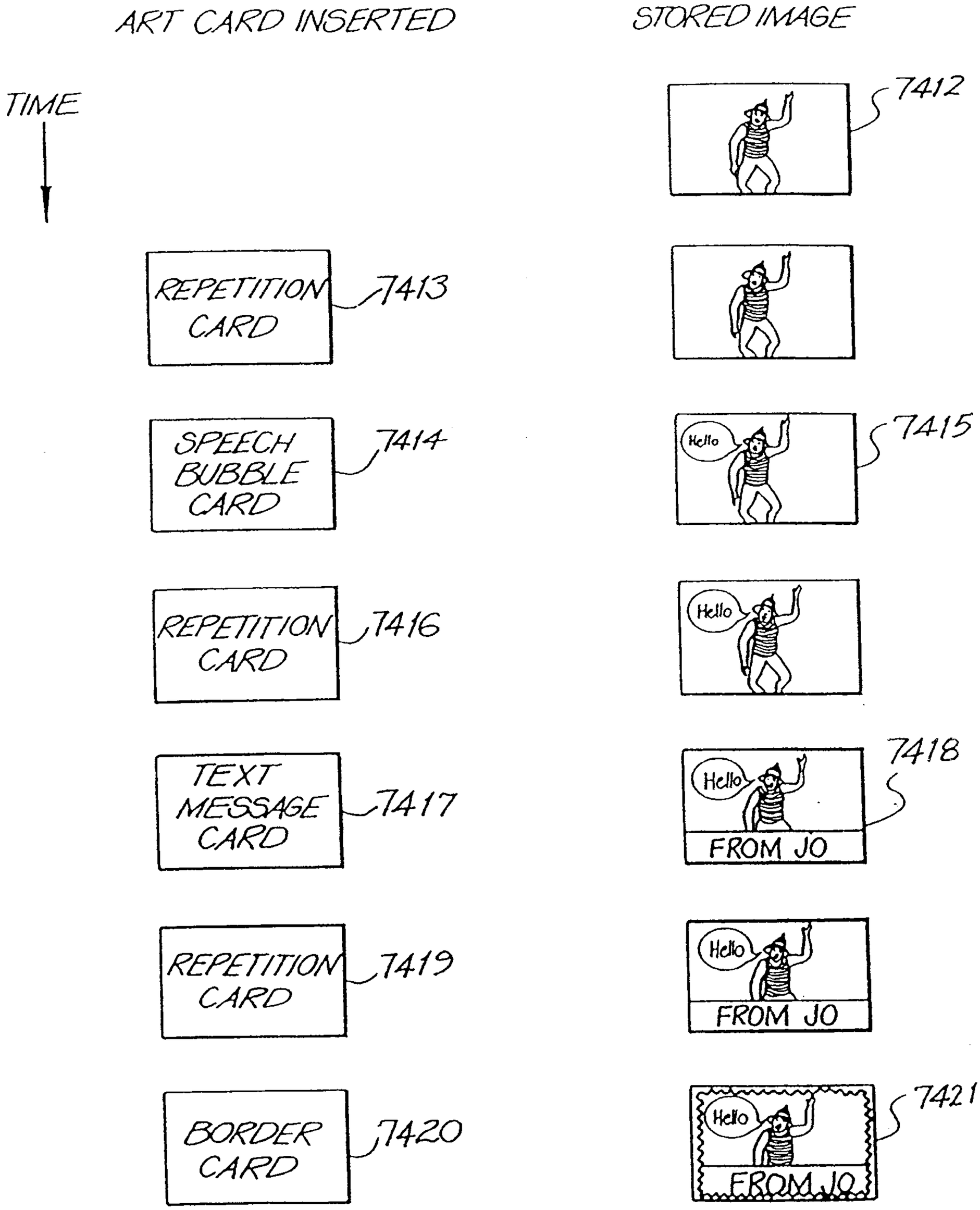
ART CARD INSERTED
STORED IMAGE
TIME
7412
REPETITION CARD
7413
SPEECH BUBBLE CARD
7414
Hello
7415
REPETITION CARD
7416
Hello
TEXT MESSAGE CARD
7417
Hello
FROM JO
7418
REPETITION CARD
7419
Hello
FROM JO
BORDER CARD
7420
Hello
FROM JO
7421

FIG 331

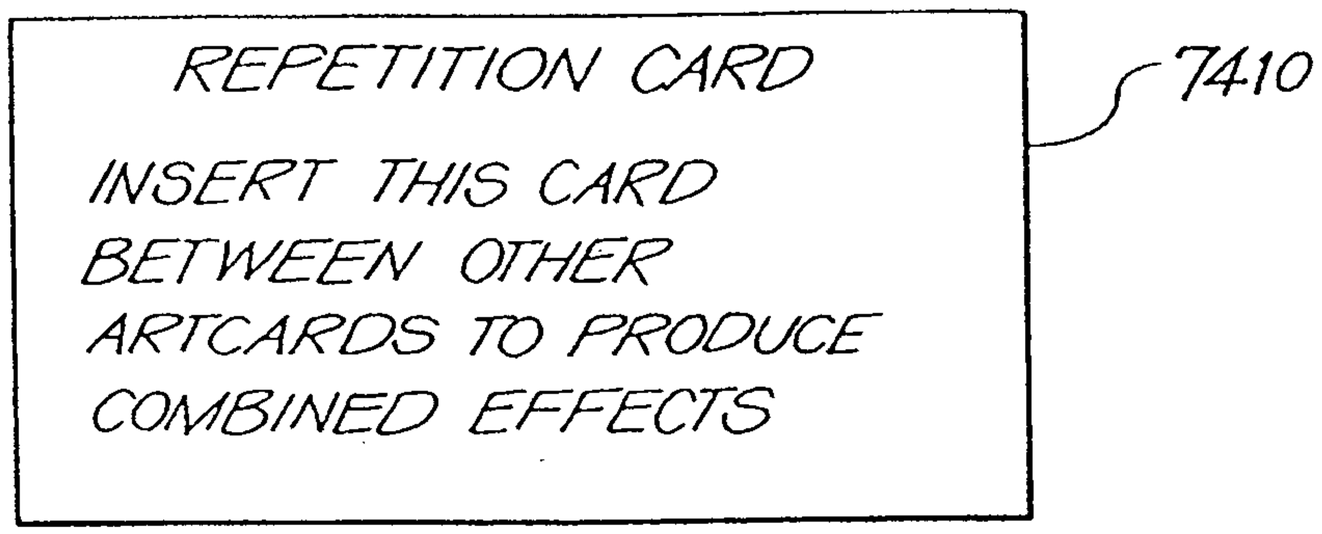
REPETITION CARD
INSERT THIS CARD
BETWEEN OTHER
ARTCARDS TO PRODUCE
COMBINED EFFECTS
7410

FIG. 332

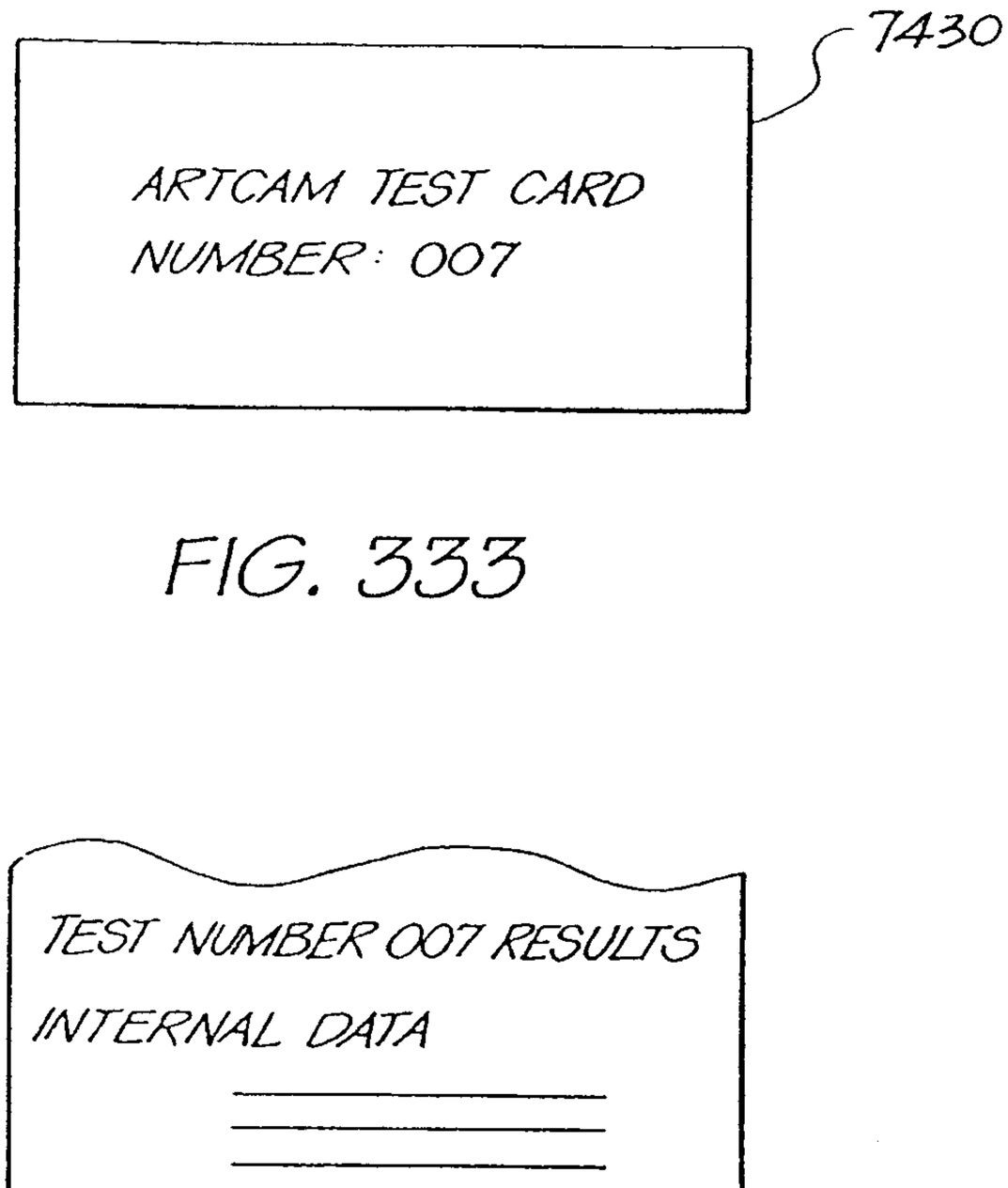

FIG. 333

FIG. 334

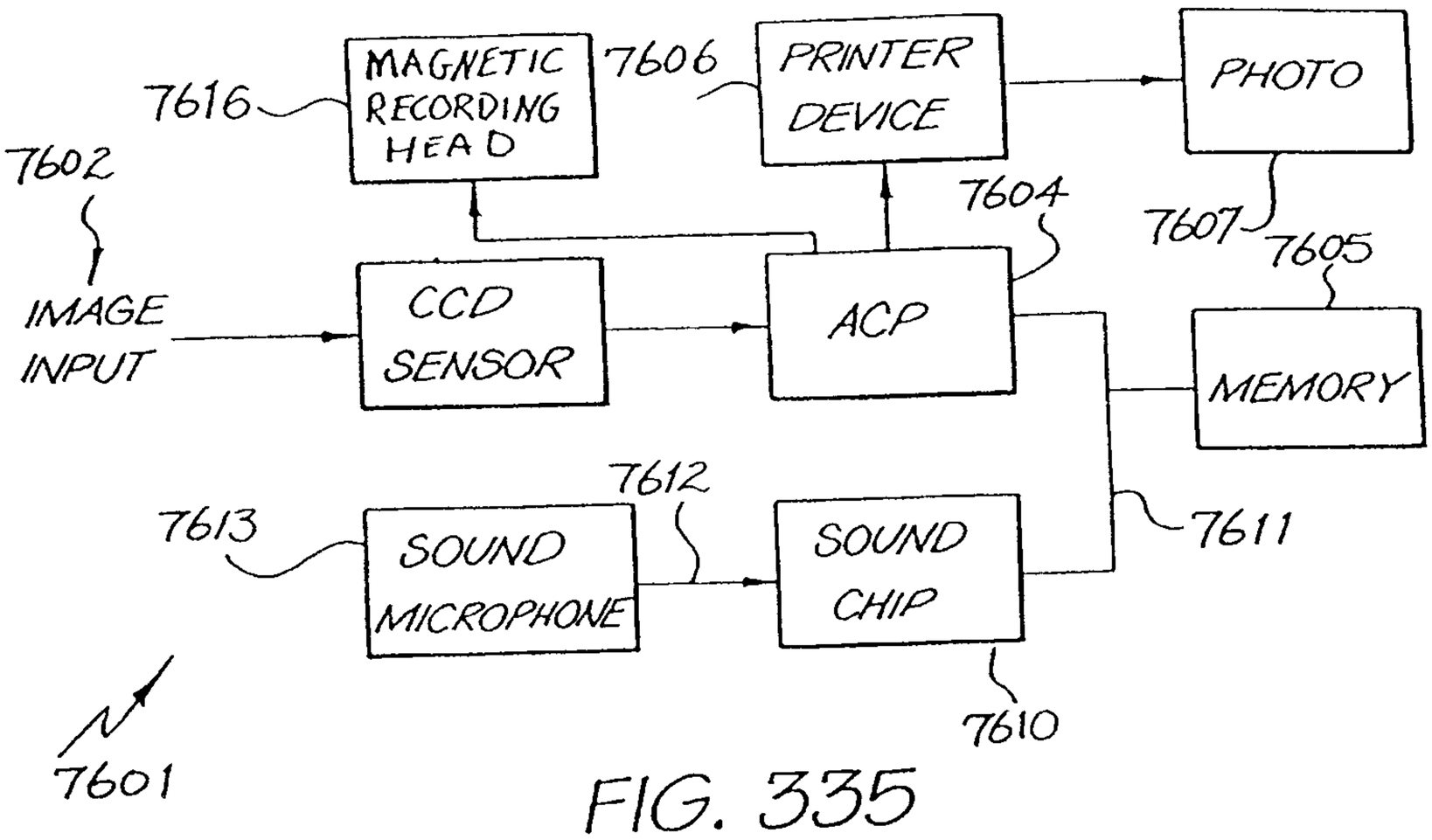

FIG. 335

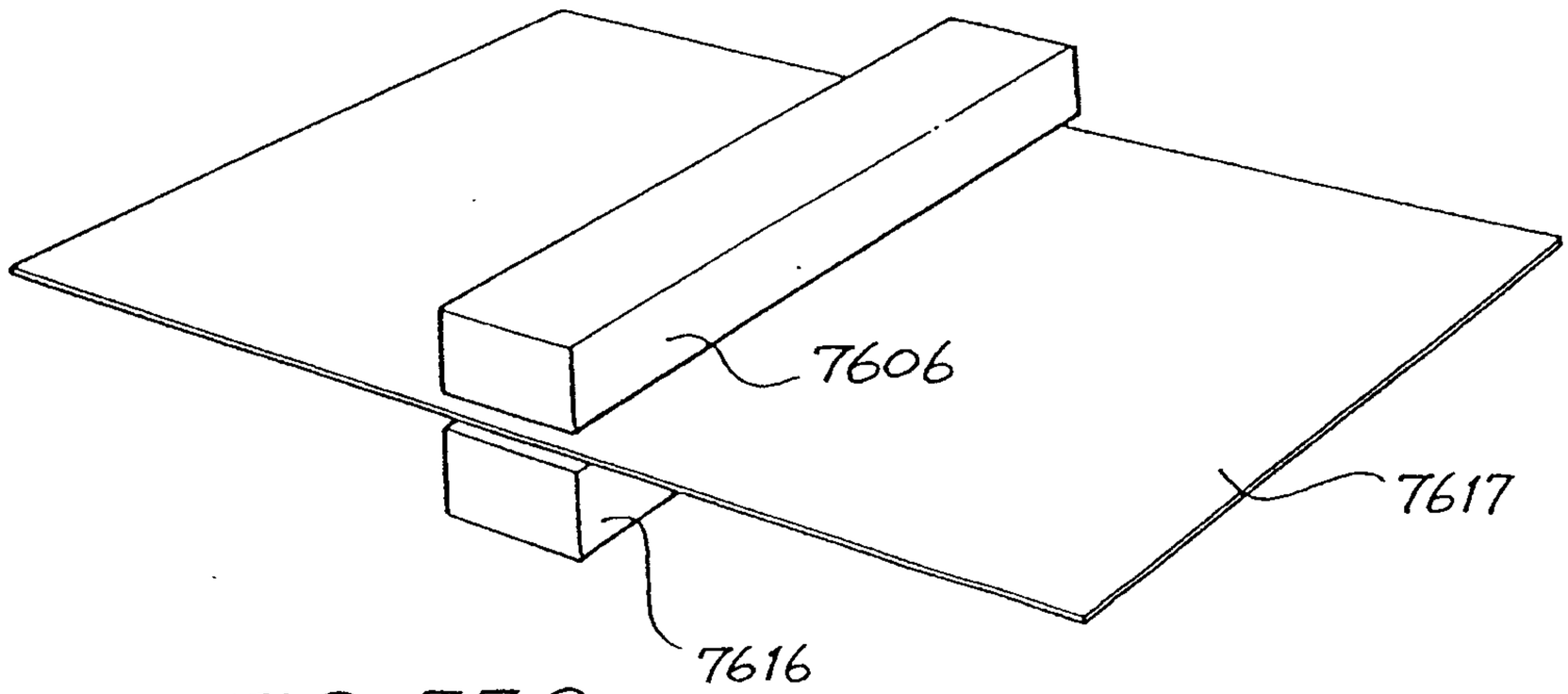

FIG. 336

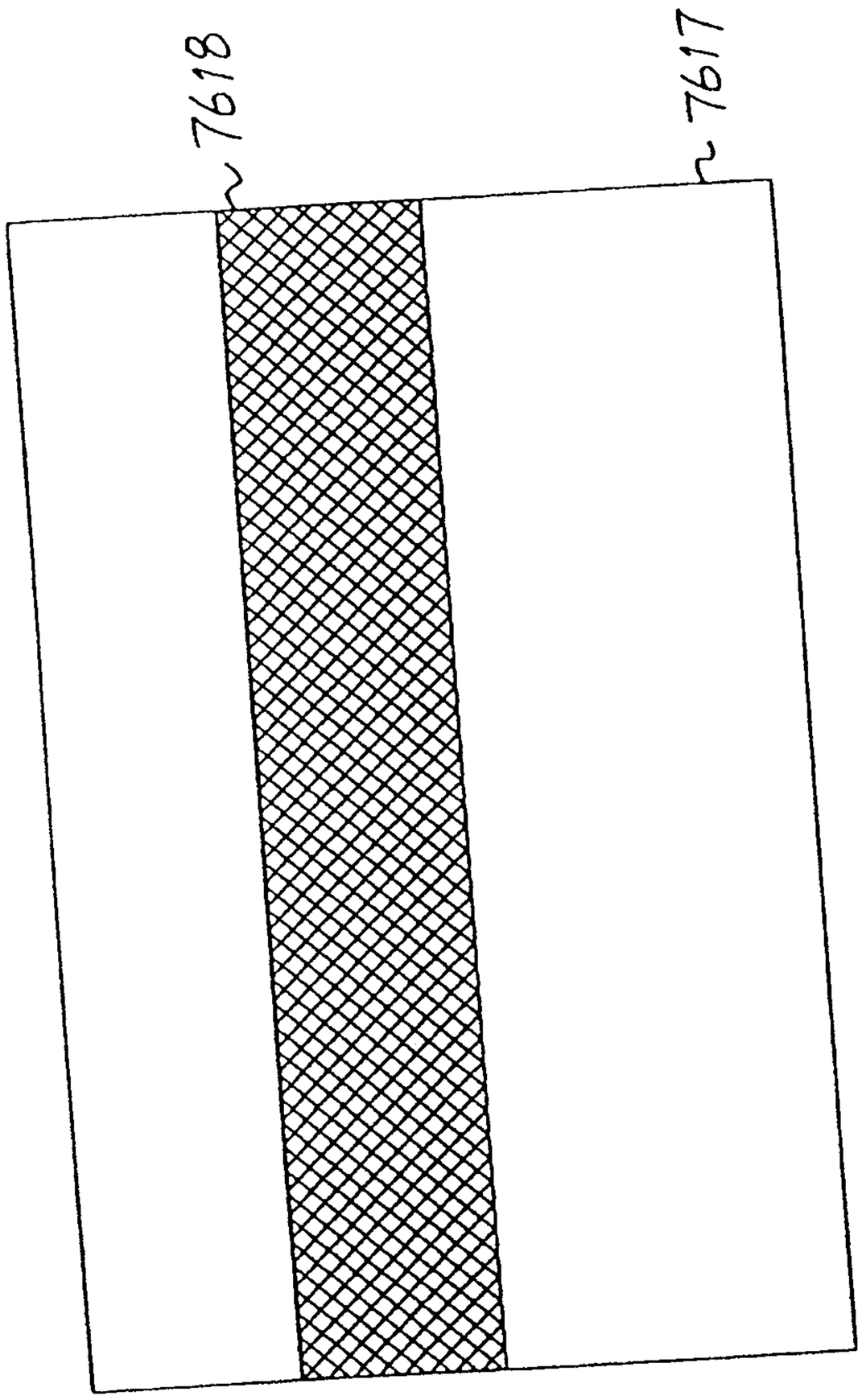

FIG. 337

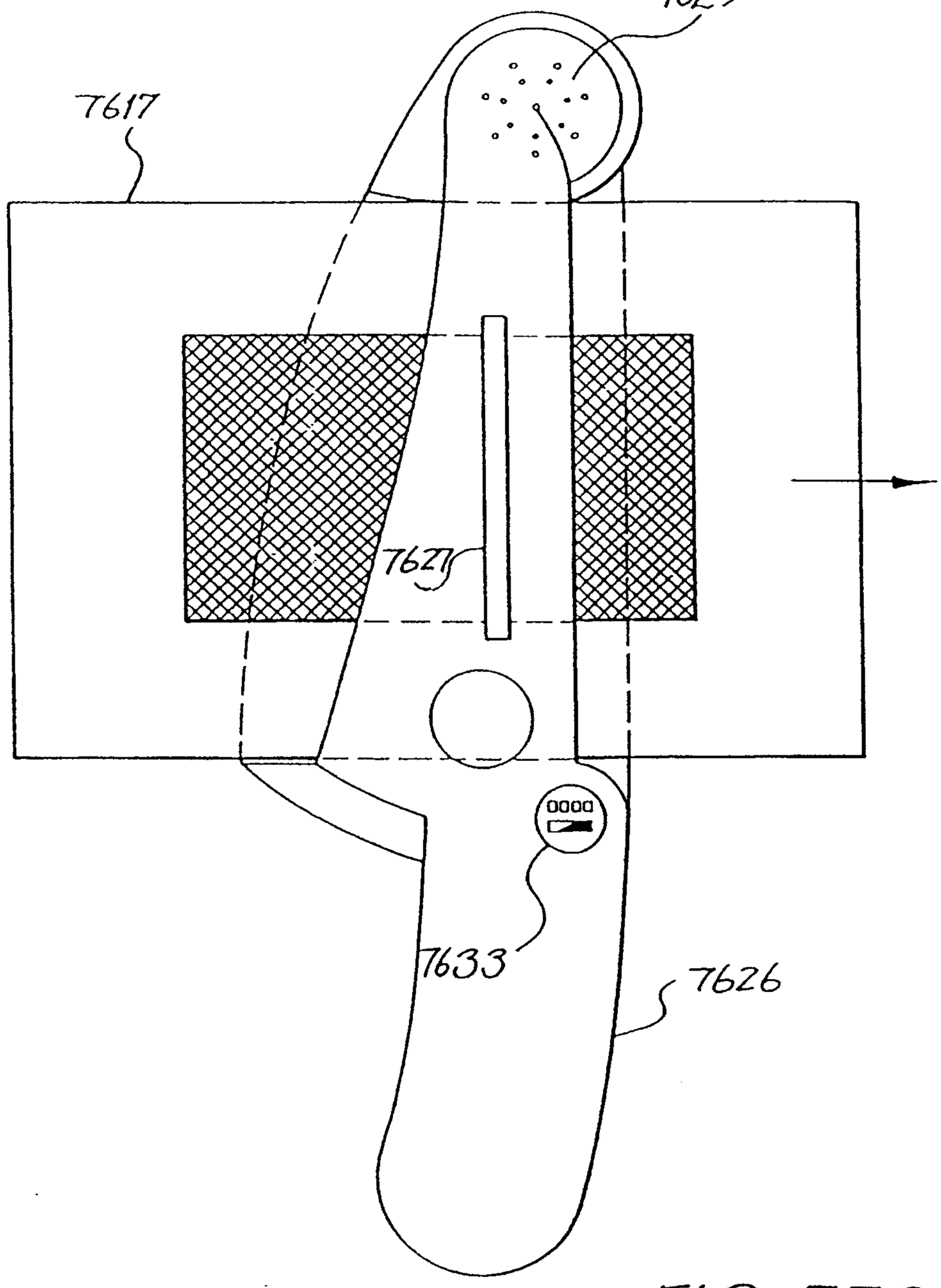

FIG. 338

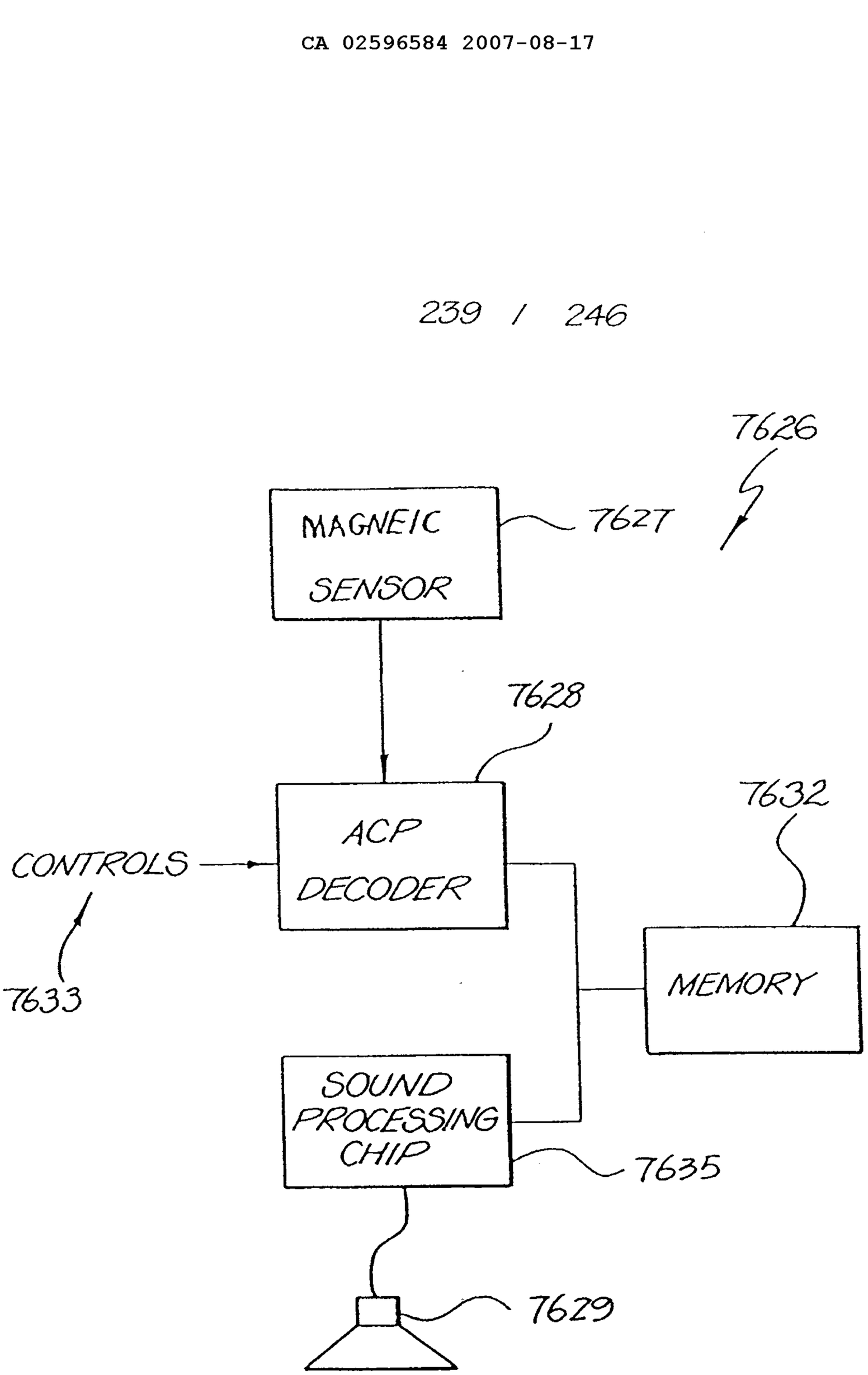
7626
MAGNEIC SENSOR
7627
7628
ACP DECODER
CONTROLS
7633
7632
MEMORY
SOUND PROCESSING CHIP
7635
7629

FIG. 339

240 / 246

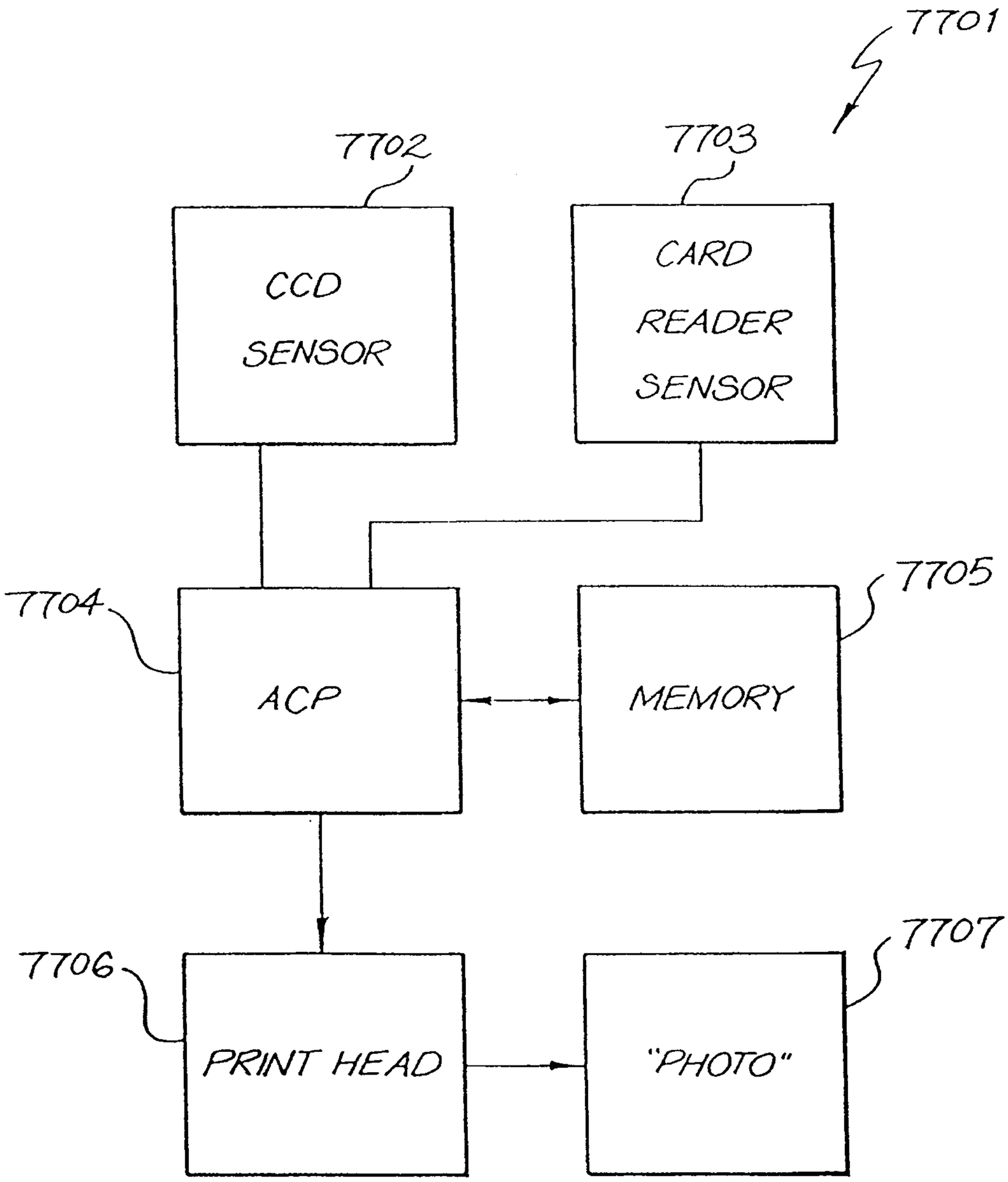

FIG. 340

241 / 246

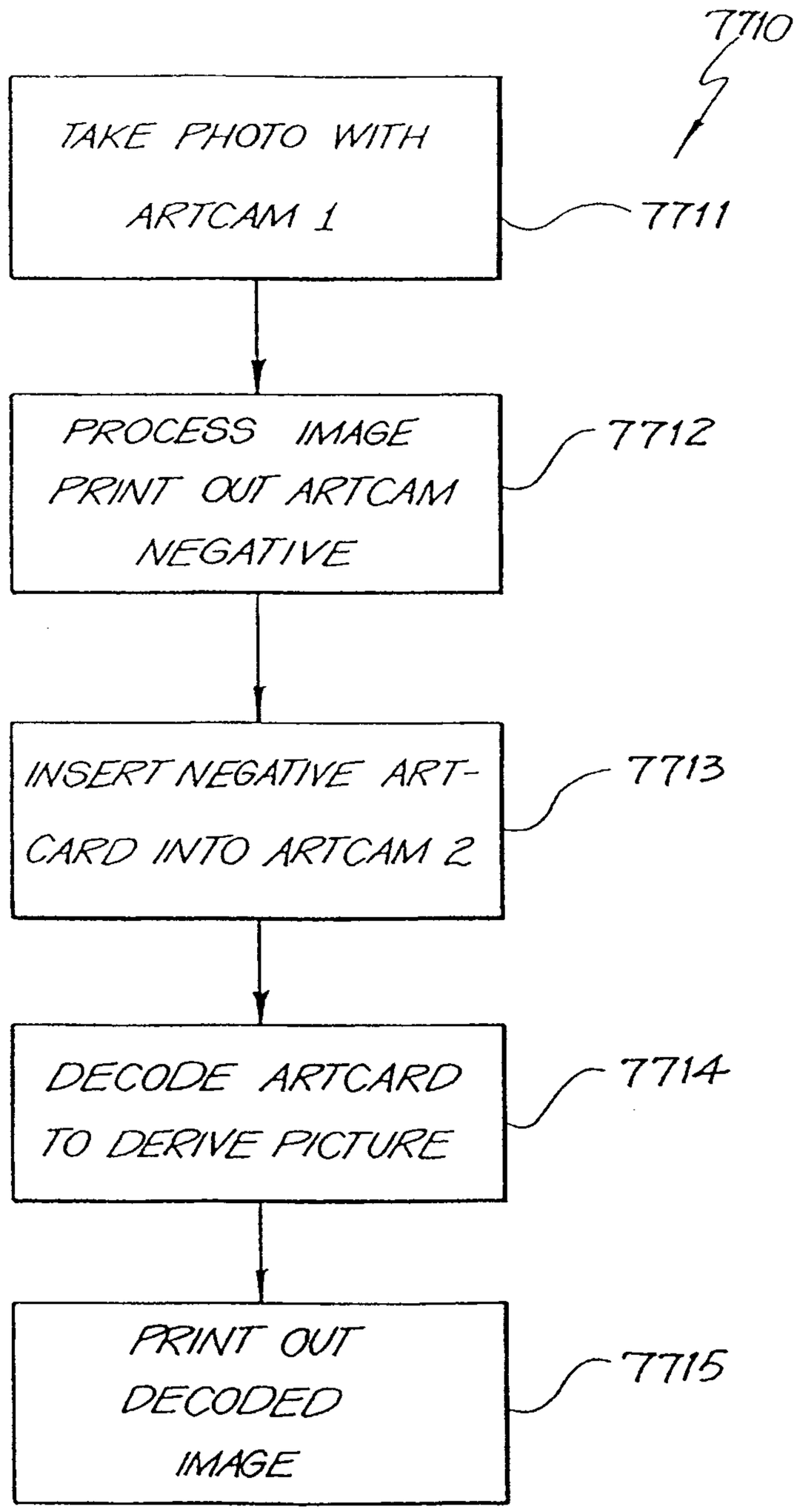

FIG. 341

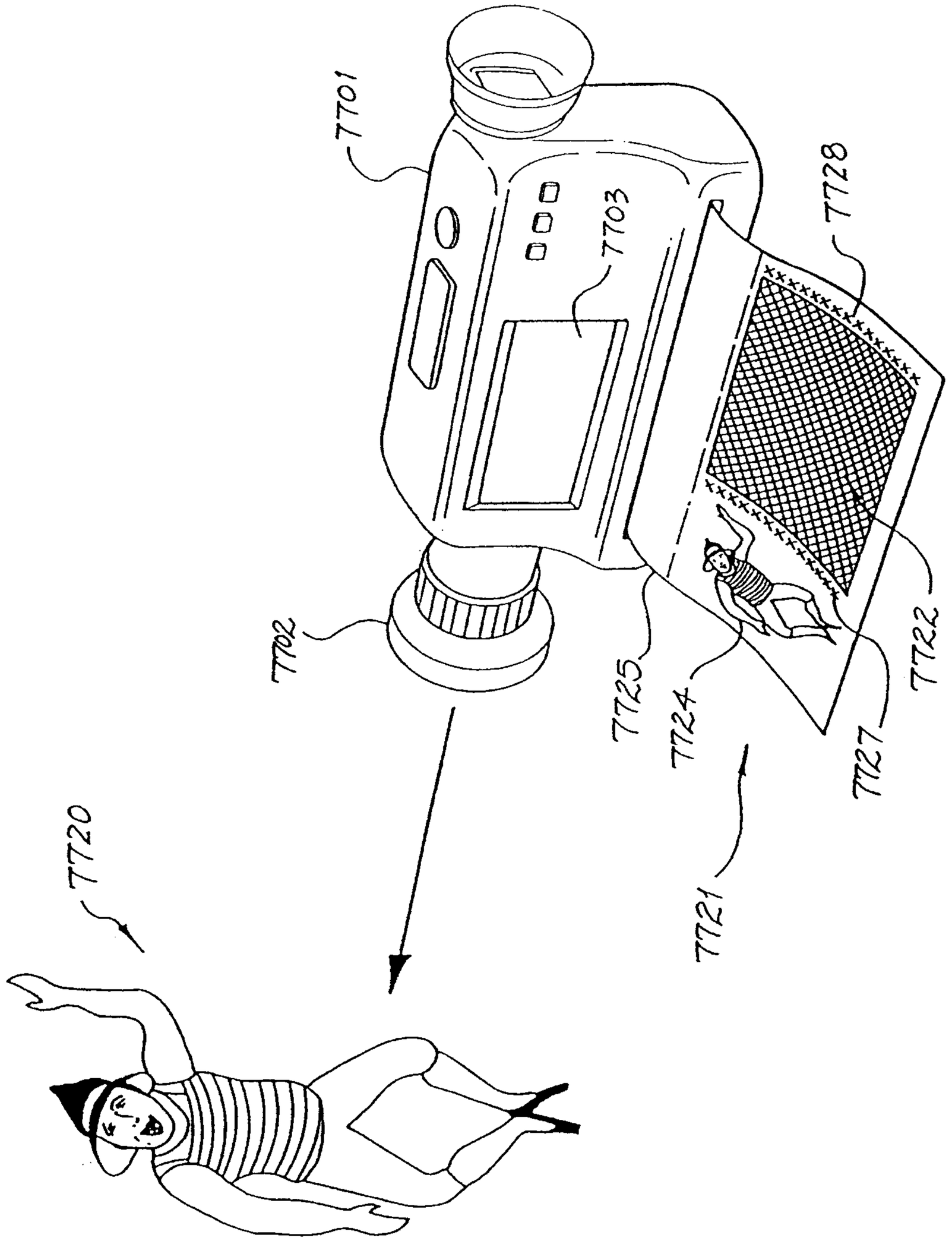

FIG. 342

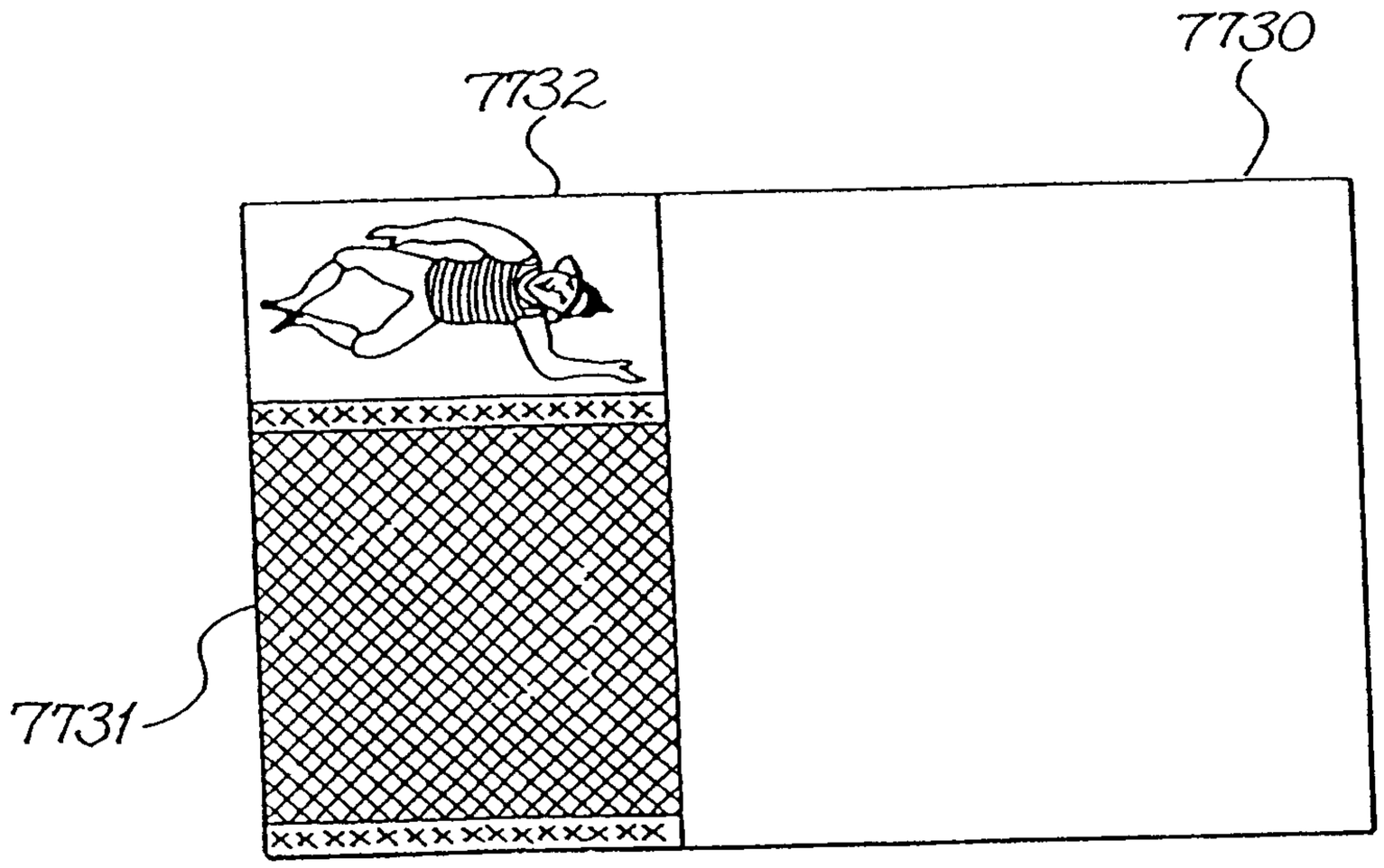

FIG. 343

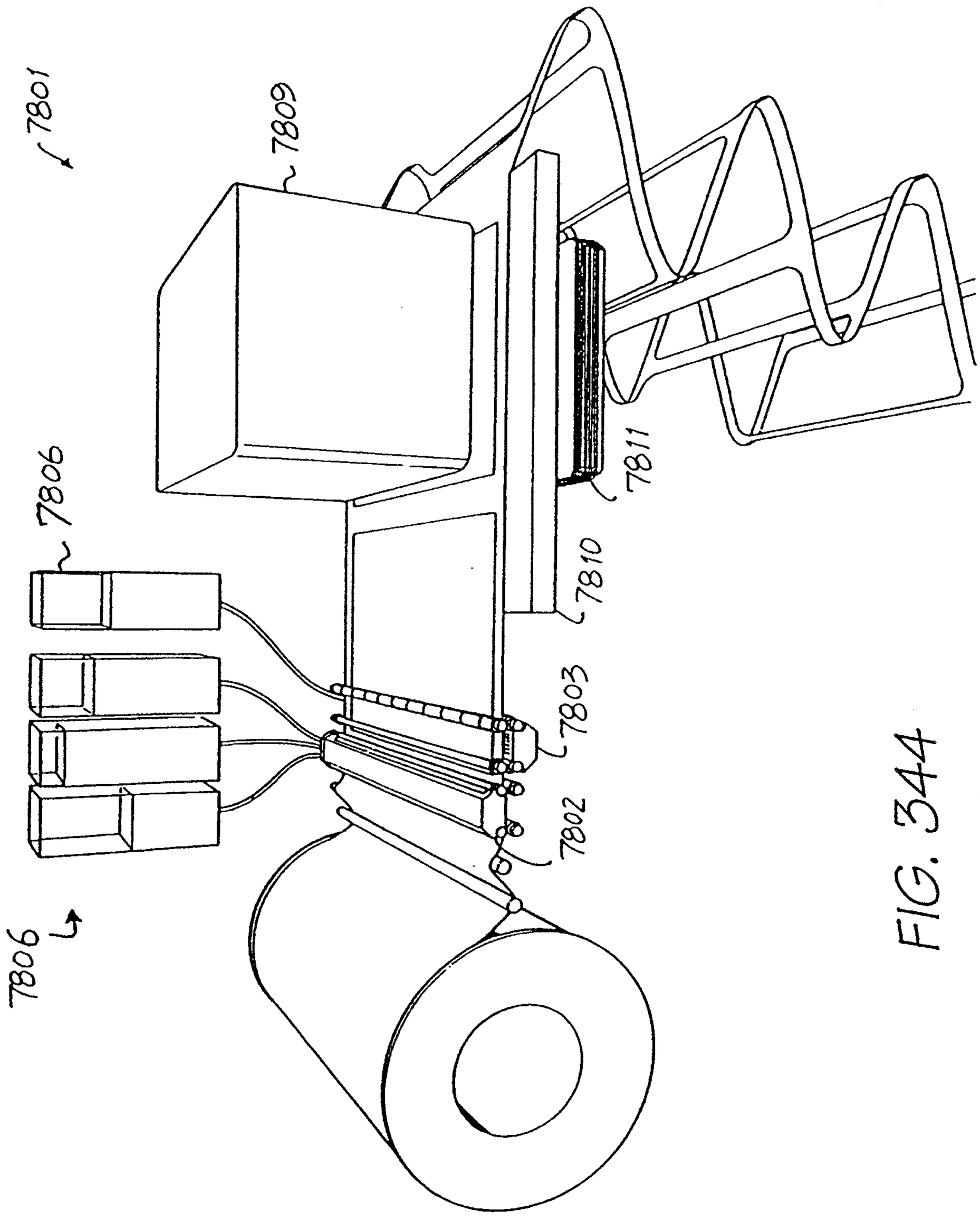

FIG. 344

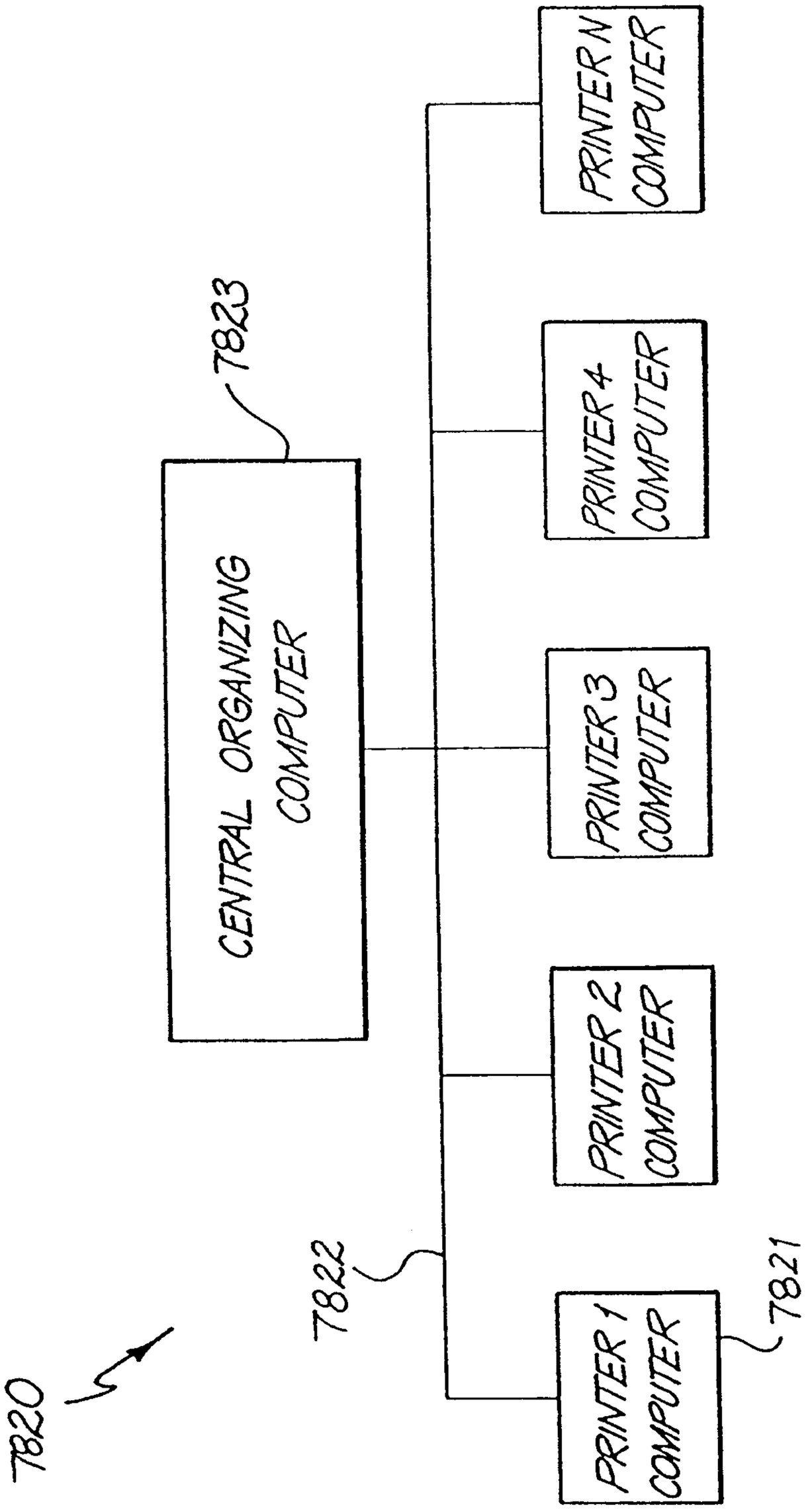
7820
CENTRAL ORGANIZING COMPUTER
7823
7822
7821
PRINTER 1 COMPUTER
PRINTER 2 COMPUTER
PRINTER 3 COMPUTER
PRINTER 4 COMPUTER
PRINTER N COMPUTER

FIG. 345

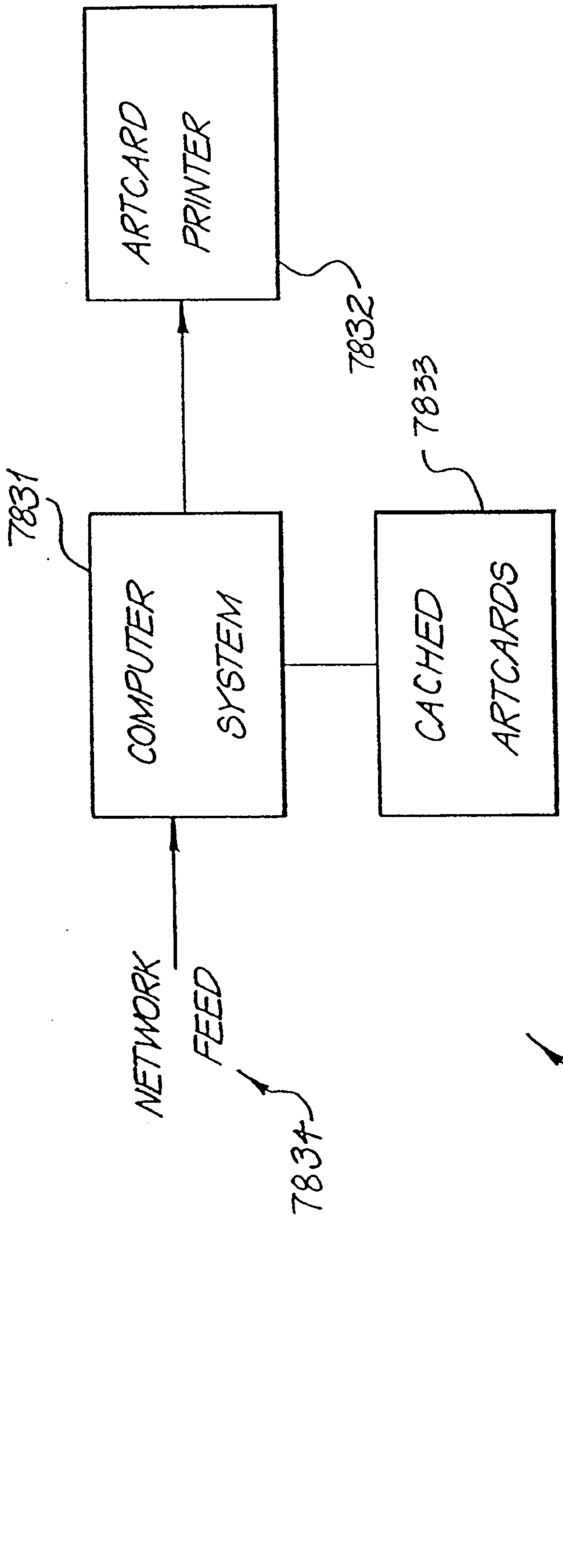
ARTCARD PRINTER
7832
7833
COMPUTER SYSTEM
CACHED ARTCARDS
NETWORK FEED
7834
7830

FIG. 346

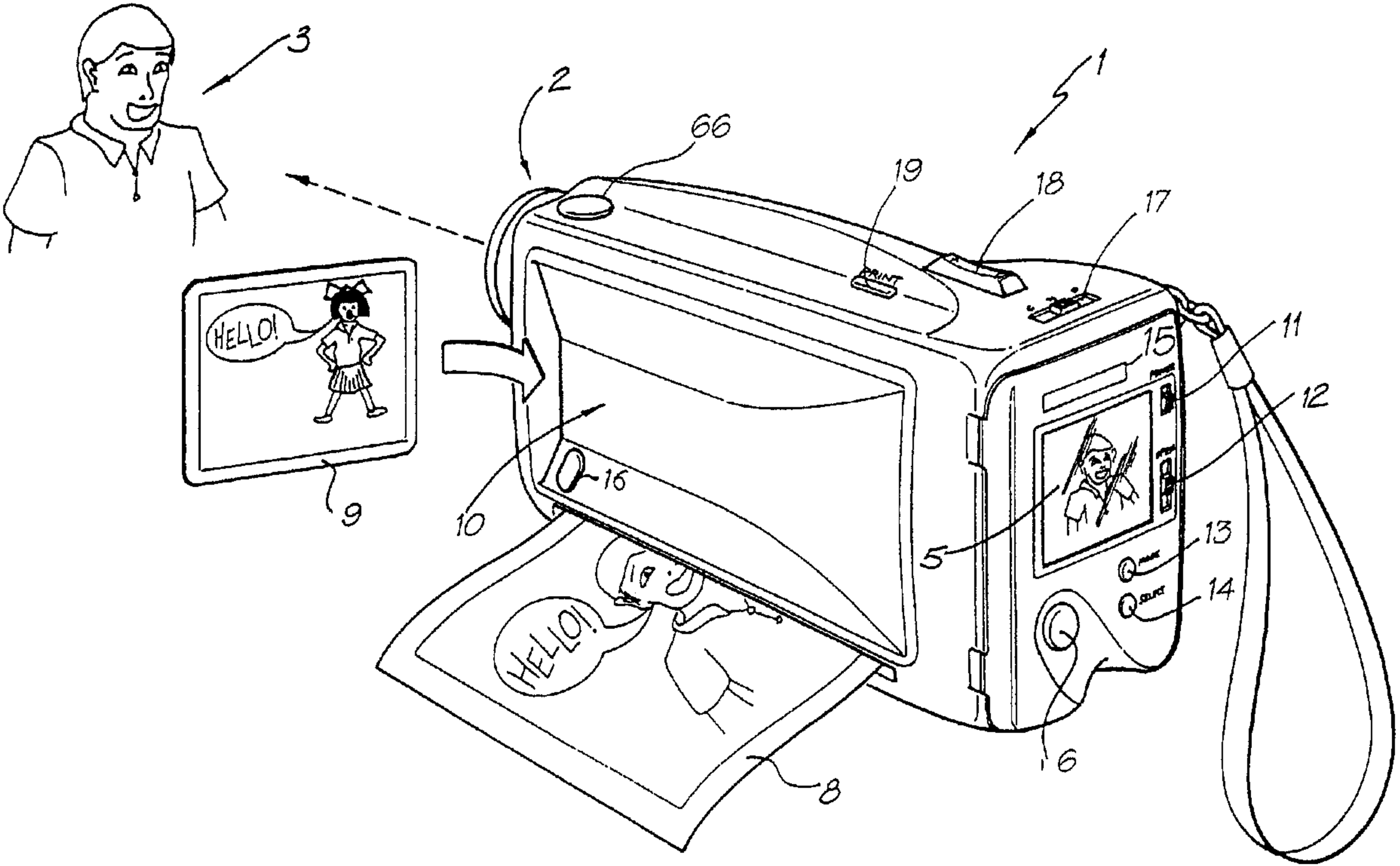

3
2
1
66
19
18
17
PRINT
HELLO!
15
11
12
9
10
16
5
13
14
HELLO!
6
8