(12) INTERNATIONAL APPLICATION PUBLISHED UNDER THE PATENT COOPERATION TREATY (PCT)

(19) World Intellectual Property Organization
International Bureau

(43) International Publication Date
10 May 2013 (10.05.2013)

WIPO | PCT

(10) International Publication Number
WO 2013/067188 A1

(51) **International Patent Classification**:
A61B 17/12 (2006.01)

(21) **International Application Number**:
PCT/US2012/063074

(22) **International Filing Date**:
1 November 2012 (01.11.2012)

(25) **Filing Language**: English

(26) **Publication Language**: English

(30) **Priority Data**:
61/553,948 1 November 2011 (01.11.2011) US
61/661,799 19 June 2012 (19.06.2012) US

(71) **Applicant**: **COHEREX MEDICAL, INC.** [US/US]; 3598 West 1820 South, Salt Lake City, Utah 84104 (US).

(72) **Inventors**: **MILES, Scott D.**; 11732 South Brisbane Drive, Sandy, Utah 84094 (US). **DAVIS, Clark C.**; 6326 Crestmount Drive, Holladay, Utah 84121 (US). **EDMISTON, Daryl R.**; 754 West Marsh Cove, Draper, Utah 84020 (US). **LINDER, Richard J.**; 6326 Crestmount Drive, Sandy, Utah 84093 (US). **MARTIN, John Alexander**; 4036 Moose Hollow Rd., Park City, Utah 84098 (US).

(74) **Agent**: **JENSEN, Bradley B.**; Holland & Hart LLP, P.O. Box 11583, 222 S. Main Street, Suite 2200, Salt Lake City, Utah 84110 (US).

(81) **Designated States** *(unless otherwise indicated, for every kind of national protection available)*: AE, AG, AL, AM, AO, AT, AU, AZ, BA, BB, BG, BH, BN, BR, BW, BY, BZ, CA, CH, CL, CN, CO, CR, CU, CZ, DE, DK, DM, DO, DZ, EC, EE, EG, ES, FI, GB, GD, GE, GH, GM, GT, HN, HR, HU, ID, IL, IN, IS, JP, KE, KG, KM, KN, KP, KR, KZ, LA, LC, LK, LR, LS, LT, LU, LY, MA, MD, ME, MG, MK, MN, MW, MX, MY, MZ, NA, NG, NI, NO, NZ, OM, PA, PE, PG, PH, PL, PT, QA, RO, RS, RU, RW, SC, SD, SE, SG, SK, SL, SM, ST, SV, SY, TH, TJ, TM, TN, TR, TT, TZ, UA, UG, US, UZ, VC, VN, ZA, ZM, ZW.

(84) **Designated States** *(unless otherwise indicated, for every kind of regional protection available)*: ARIPO (BW, GH, GM, KE, LR, LS, MW, MZ, NA, RW, SD, SL, SZ, TZ, UG, ZM, ZW), Eurasian (AM, AZ, BY, KG, KZ, RU, TJ, TM), European (AL, AT, BE, BG, CH, CY, CZ, DE, DK, EE, ES, FI, FR, GB, GR, HR, HU, IE, IS, IT, LT, LU, LV, MC, MK, MT, NL, NO, PL, PT, RO, RS, SE, SI, SK, SM, TR), OAPI (BF, BJ, CF, CG, CI, CM, GA, GN, GQ, GW, ML, MR, NE, SN, TD, TG).

[Continued on next page]

(54) **Title**: MEDICAL DEVICE FOR MODIFICATION OF LEFT ATRIAL APPENDAGE AND RELATED SYSTEMS AND METHODS

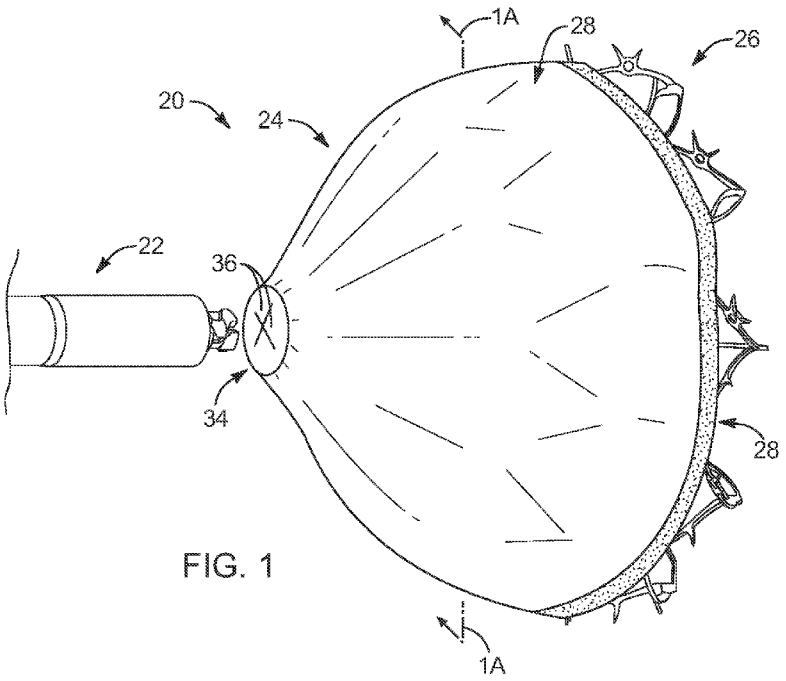

FIG. 1

(57) **Abstract**: Devices, methods and systems are provided for occluding an opening within the tissue of a body, such as a left atrial appendage. In one embodiment, a medical device includes an occluder portion and an anchor portion, the anchor portion hingably coupled to the occluder portion. With this arrangement, the anchor portion actuates and pivots relative to the occluder portion between an anchor deployed position and an anchor non-deployed position while the occluder portion is in an occluder deployed position.

WO 2013/067188 A1

Declarations under Rule 4.17:

— *as to applicant's entitlement to apply for and be granted a patent (Rule 4.17(ii))*

— *as to the applicant's entitlement to claim the priority of the earlier application (Rule 4.17(iii))*

Published:

— *with international search report (Art. 21(3))*

MEDICAL DEVICE FOR MODIFICATION OF LEFT ATRIAL APPENDAGE AND RELATED SYSTEMS AND METHODS

CROSS-REFERENCE TO RELATED APPLICATIONS

[0001] The present application claims the benefit of U.S. Provisional Application No. 61/553,948, filed on November 1, 2011, and U.S. Provisional Application No. 61/661,799, filed on June 19, 2012. The disclosures of each application listed above are incorporated by reference herein in their entireties.

TECHNICAL FIELD

[0002] The present invention relates generally to the occlusion or modification of tissue openings or appendages and, more specifically, to devices, systems and methods for occluding or otherwise structurally altering such openings and appendages including, for example, left atrial appendages.

BACKGROUND

[0003] The upper chambers of the heart, the atria, have appendages attached to each of them. For example, the left atrial appendage is a feature of all human hearts. The physiologic function of such appendages is not completely understood, but they do act as a filling reservoir during the normal pumping of the heart. The appendages typically protrude from the atria and cover an external portion of the atria. Atrial appendages differ substantially from one to another. For example, one atrial appendage may be configured as a tapered protrusion while another atrial appendage may be configured as a re-entrant, sock-like hole. The inner surface of an appendage is conventionally trabeculated with cords of muscular cardiac tissue traversing its surface with one or multiple lobes.

[0004] The atrial appendages appear to be inert while blood is being pumped through them during normal heart function. In other words, the appendages don't appear to have a noticeable effect on blood pumped through them during normal heart function. However, in cases of atrial fibrillation, when the atria go into arrhythmia, blood may pool and thrombose inside of the appendages. Among other things, this can pose a stroke risk when it occurs in the

left appendage since the thrombus may be pumped out of the heart and into the cranial circulation once normal sinus rhythm is restored following arrhythmia events.

[0005] Historically, appendages have sometimes been modified surgically to reduce the risk imposed by atrial fibrillation. In recent years devices which may be delivered percutaneously into the left atrial appendage have been introduced. The basic function of these devices is to exclude the volume within the appendage with an implant which then allows blood within the appendage to safely thrombose and then to be gradually incorporated into cardiac tissue. This process, coupled with the growth of endothelium over the face of the device, can leave a smooth, endothelialized surface where the appendage is located. In comparison to surgical procedures, devices implanted percutaneously are a less invasive means for addressing the problems associated with the left atrial appendage.

[0006] However, due to the wide variability of the ostium size and volume of the left atrial appendage, current implantable devices conventionally include a structure that cannot meet such variability, resulting in inadequate devices for many left atrial appendage anatomies. Further, such implantable devices are substantially limited by the orientation by which they can successfully be deployed. As such, it would be advantageous to provide a percutaneous system, method and/or device that addresses, for example, the issues of implant orientation, the variability in sizes and shapes of the left atrial appendage, or all of these, in order to provide high success in left atrial appendage modification. It would also be desirable to provided a device, system and method that enable easy positioning and repositioning of the device relative to the structure being modified or occluded including the positioning (or repositioning) of an occluder portion independent of other components or features of the device.

[0007] A variety of features and advantages will be apparent to those of ordinary skill in the art upon reading the description of various embodiments set forth below.

DISCLOSURE OF THE INVENTION

[0008] Embodiments of the present invention are directed to various devices, systems and methods of occluding an opening in the tissue of a body. For example, in one embodiment, a medical device system for modifying a left atrial appendage ("LAA") of a heart is provided. The medical device system includes a sheath and a delivery system. The sheath includes a length and defines a sheath lumen extending through the length of the sheath. The delivery

system includes a delivery catheter that extends between a proximal end and a distal end, a handle coupled to the proximal end of the delivery catheter, and a medical device operatively coupled to the handle and coupled to the distal end of the delivery catheter. The medical device includes a hub having a bore that defines an axis, an occluder portion, and an anchor portion. The occluder portion is coupled to the hub and is configured to be moved to an occluder non-deployed position with the occluder portion within a distal portion of the sheath, and the occluder portion configured to be moved to an occluder deployed position upon the sheath being moved proximally relative to the occluder portion. The anchor portion extends between a first end and a second end. The first end is configured to be operatively coupled to the handle and the second end is configured to be coupled to the occluder portion. With this arrangement, upon the occluder portion being in the occluder deployed position, the anchor portion is configured to move relative to the occluder portion between an anchor non-deployed position and an anchor deployed position.

[0009] In one embodiment, the second end of the anchor portion is coupled to the occluder portion with a hinge arrangement such that the anchor portion pivots relative to the occluder portion upon the anchor portion being moved between the anchor non-deployed position and the anchor deployed position. In another embodiment, the second end of the anchor portion is pivotably coupled to the occluder portion. In still another embodiment, the first end of the anchor portion is moveable along the axis of the hub to move the anchor portion between the anchor non-deployed position and the anchor deployed position. In another embodiment, the handle includes a plunger shaft that is moveable between a first position and a second position that corresponds with the anchor non-deployed position and the anchor deployed position, respectively.

[0010] In another embodiment, the anchor portion includes multiple anchor actuator arms that each extend to a v-extension such that the v-extension includes hooks to engage tissue of the LAA. In another embodiment, the anchor portion includes an anchor zig-zag portion hingably coupled to the occluder portion. In still another embodiment, the occluder portion includes an occluder zig-zag portion and the anchor portion includes an anchor zig-zag portion. In yet another embodiment, the occluder portion includes a tissue growth member extending over a proximal face of the occluder portion and extending over a portion of the anchor portion.

[0011] In another embodiment, the distal end of the delivery catheter is threadably connected to the medical device. In another embodiment, the delivery catheter includes an actuator shaft and multiple fingers. The actuator shaft is configured to be actuated by actuation of the handle. Further, the multiple fingers extend distally from the distal end of the delivery catheter such that the multiple fingers extend over the actuator shaft so that the multiple fingers maintain a latched position to the hub. Furthermore, in another embodiment, the medical device is configured to detach from the delivery catheter upon proximal movement of the actuator shaft to a position proximal of the multiple fingers such that the multiple fingers collapse to an inward unlatched position. In yet another embodiment, the sheath includes an imaging device at a distal end of the sheath.

[0012] In accordance with another embodiment of the present invention, a medical device for modifying an LAA of a heart. The medical device includes a hub defining an axis, an occluder portion, and an anchor portion. The occluder portion is coupled to the hub. Further, the occluder portion is independently moveable relative to the anchor portion between an occluder non-deployed position and an occluder deployed position. The anchor portion is hingably coupled to the occluder portion such that the anchor portion is pivotable relative to the occluder portion between an anchor non-deployed position and an anchor deployed position upon the occluder portion being in the occluder deployed position.

[0013] In one embodiment, the anchor portion includes anchor actuator arms with a portion actuatable substantially along the axis of the hub to move the anchor portion between the anchor non-deployed position and the anchor deployed position. In another embodiment, the anchor portion includes multiple anchor actuator arms each extending to a v-extension such that the v-extension includes hooks to engage tissue of the LAA. In still another embodiment, the anchor portion includes an anchor zig-zag portion hingably coupled to the occluder portion. In another embodiment, the occluder portion includes an occluder zig-zag portion and the anchor portion includes an anchor zig-zag portion, and the occluder zig-zag portion is hingably coupled to the anchor zig-zag portion.

[0014] In another embodiment, the occluder portion includes a tissue growth member that extends over a proximal face of the occluder portion and extends over a portion of the anchor portion. In still another embodiment, the medical device further includes a sheath configured to move the occluder portion between the occluder non-deployed configuration and

the occluder deployed configuration, the sheath including an imaging device at a distal end of the sheath.

[0015] In accordance with another embodiment of the present invention, a method for modifying an LAA of a heart is provided. The method includes: advancing a medical device coupled to a distal end of a delivery catheter through a sheath positioned in the vasculature and into the LAA of the heart, the medical device including an occluder portion and an anchor portion, the anchor portion coupled to the occluder portion; deploying the occluder portion of the medical device from the sheath in the LAA with the anchor portion maintaining a non-deployed position; and actuating the anchor portion of the medical device between the non-deployed position and a deployed position while the occluder portion of the medical device is deployed.

[0016] In another embodiment, the method step of actuating the anchor portion includes pivoting the anchor portion at a hinged coupling between the anchor portion and the occluder portion. In another embodiment, the method step of actuating the anchor portion includes actuating actuator arms of the anchor portion substantially along an axis of the medical device. In still another embodiment, the method step of deploying the occluder portion includes manually withdrawing the sheath from over the occluder portion of the medical device. In another embodiment, the method further includes disengaging the medical device from fingers extending from the distal end of the delivery catheter by proximally moving an actuator shaft from the medical device to collapse the fingers from a hub of the medical device. In still another embodiment, the method further includes imaging the medical device relative to the LAA from a distal end of the sheath.

[0017] In accordance with another embodiment of the present invention, a medical device for modifying an LAA of a heart includes an occluder frame and an anchor portion. The occluder frame includes a proximal end and a distal end with the proximal end coupled to a hub. The anchor portion includes a first end and a second end. The second end is hingably coupled to the distal end of the occluder frame and the first end is coupled to a collar arrangement. The collar arrangement is moveable co-axially relative to an axis of the hub to move the anchor portion between an anchor deployed configuration and an anchor non-deployed configuration.

[0018] In one embodiment, the anchor portion includes a zig-zag anchor portion. In another embodiment, the zig-zag anchor portion includes tines extending therefrom, the tines

configured to engage tissue within the LAA. In another embodiment, the anchor portion includes loop extensions.

[0019] In another embodiment, the occluder frame includes a zig-zag occluder portion. In one embodiment, the zig-zag occluder portion includes face struts extending proximally therefrom toward the hub. In another embodiment, the medical device includes a tissue growth member attached to the occluder frame. In one embodiment, the tissue growth member extends distal the distal end of the occluder frame.

[0020] In another embodiment, the anchor portion is hingably coupled to the occluder portion to facilitate pivoting the anchor portion relative to the occluder portion between the anchor deployed configuration and the anchor non-deployed configuration. In another embodiment, the anchor portion includes a first hinge arrangement and a second hinge arrangement. In one embodiment, the anchor portion includes a flexure portion distal the zig-zag anchor portion.

[0021] In another embodiment, the collar arrangement is a splined sleeve. In another embodiment, the medical device further includes a spring coupled to a proximal end of the hub and is configured to close-off an opening defined in the hub. Such a spring may include a clover configuration. In another embodiment, the medical device further includes a delivery catheter configured to removably couple to the hub. The delivery catheter includes a threaded connector and a collet. The threaded connector is configured to be threaded to the collar arrangement. The collet includes collet fingers extending distally from the collet. The collet fingers are engageable with the hub. The threaded connector, upon being unthreaded from the collar arrangement, is moveable proximally through the collet such that the collet fingers collapse to disengage from the hub.

[0022] These various embodiments may include other components, features or acts as will be apparent from the detailed description set forth below. Additionally, other embodiments, configurations and processes are set forth below in the detailed description of the invention.

BRIEF DESCRIPTION OF THE DRAWINGS

[0023] The foregoing and other advantages of the invention will become apparent upon reading the following detailed description and upon reference to the drawings in which:

[0024] FIG. 1 is a perspective view of a medical device and a distal portion of a delivery system, according to one embodiment of the present invention;

[0025] FIG. 1A is a partial cross-sectional view of the medical device, taken along section line 1A of FIG. 1, according to another embodiment of the present invention;

[0026] FIG. 1B is an enlarged section view of an occluder portion, taken from detail 1B of FIG. 1A, according to another embodiment of the present invention;

[0027] FIG. 2 is a perspective view of the medical device of FIG. 1, depicting the frame without its tissue growth member, according to another embodiment of the present invention;

[0028] FIG. 3 is a top view of frame components of the occluder portion and the anchor portion of the medical device of FIG. 2, depicting frame components laser cut from a flat sheet prior to being assembled, according to another embodiment of the present invention;

[0029] FIG. 3A is a partial enlarged view of the anchor portion depicted in FIG. 3, according to another embodiment of the present invention;

[0030] FIG. 3B is an enlarged view of a hinged coupling between the occluder portion and the anchor portion of the medical device, according to another embodiment of the present invention;

[0031] FIG. 4 is a perspective views of a medical device delivery system, according to another embodiment of the present invention;

[0032] FIG. 5 is a side view of an end portion of a delivery catheter, according to another embodiment of the present invention;

[0033] FIG. 5A is a cross-sectional view of the end portion of the delivery catheter, taken along a longitudinal axis of the delivery catheter of FIG. 5, according to another embodiment of the present invention;

[0034] FIG. 5B is an enlarged view of the end portion of the delivery catheter, according to another embodiment of the present invention;

[0035] FIGS. 6A-6C are perspective views of a loader, depicting the loader being pushed over an occluder portion of the medical device, the medical device inserted into a sheath, and pushed to a distal end of the sheath, respectively, according to another embodiment of the present invention;

[0036] FIG. 7 is a side view of a distal portion of the sheath, depicting a portion of the medical device exposed at a distal end of the sheath in the LAA, according to another embodiment of the present invention;

[0037] FIG. 8 is a cross-sectional side view of the distal portion of the delivery system and the medical device, depicting a sheath withdrawn to deploy the occluder portion of the medical device in the LAA and depicting the anchor portion in an anchor non-deployed position, according to another embodiment of the present invention;

[0038] FIG. 8A is a side view of a handle, depicting the handle in a first position corresponding to the anchor non-deployed position, according to another embodiment of the present invention;

[0039] FIG. 9 is a cross-sectional side view of the distal portion of the delivery system and the medical device, depicting both the occluder portion and the anchor portion in an anchor deployed position in the LAA, according to another embodiment of the present invention;

[0040] FIG. 9A is a side view of the handle, depicting the handle in a second position corresponding to the anchor deployed position, according to another embodiment of the present invention;

[0041] FIG. 10 is a cross-sectional side view of the distal portion of the delivery system and the medical device, depicting the delivery system in the process of being released from the medical device in the LAA, according to another embodiment of the present invention;

[0042] FIG. 10A is a side view of the handle, depicting a portion of the handle being rotated for releasing the medical device, according to an embodiment of the present invention;

[0043] FIG. 10B is a side view of the handle, depicting a portion of the handle actuated from the second position to the first position, according to an embodiment of the present invention;

[0044] FIG. 11 is a cross-sectional side view of the distal portion of the delivery system and the medical device, depicting the delivery catheter fully released from the medical device, according to another embodiment of the present invention;

[0045] FIG. 12 is a partial perspective view of the proximal side of the medical device coupled to the delivery system, according to another embodiment of the present invention;

[0046] FIGS. 13A and 13B are cross-sectional side views of the handle, depicting a release button in a first and second position, respectively, to facilitate actuation of a plunger shaft, according to another embodiment of the present invention;

[0047] FIG. 14A and 14B are simplistic side profile views of another embodiment of a medical device, depicting the medical device in an anchor non-deployed position and an anchor deployed position, respectively, according to the present invention;

[0048] FIG. 15 is a top view of the occluder portion and the anchor portion of the medical device of FIGS. 14A and 14B, depicting fame components cut from a flat sheet, according to another embodiment of the present invention;

[0049] FIGS. 16A and 16B are simplistic side profile views of another embodiment of a medical device, depicting the medical device in an anchor non-deployed position and an anchor deployed position, respectively, according to the present invention; and

[0050] FIG. 17 is a top view of the occluder portion and the anchor portion of the medical device of FIGS. 15A and 15B, depicting frame components cut from a flat sheet, according to another embodiment of the present invention.

BEST MODE(S) FOR CARRYING OUT THE INVENTION

[0051] Referring first to FIGS. 1 and 1A, a medical device 20 and a distal end portion of a delivery system 22 is provided. The medical device 20 and delivery system 22 may be employed in interventional procedures for percutaneously closing and modifying an opening or cavity such as, for example, a left atrial appendage ("LAA") within a heart (not shown). The medical device 20 may include frame components of an occluder portion 24 and an anchor portion 26, the occluder portion 24 also including a tissue growth member 28 attached thereto. Further, the anchor portion 26 may be hingably coupled to the occluder portion 24 such that the anchor portion 26 may be actuated, upon deployment of the occluder portion 24, between a deployed position and a non-deployed position (not shown) via an actuation mechanism at a handle (not shown) of the delivery system 22. With this arrangement, the medical device 20 and delivery system 22 may provide functionality of separating the steps of deploying the occluder portion 24 and the anchor portion 26, thereby, providing additional and enhanced functionality to the physician to properly position and implant the medical device 20 in the LAA.

[0052] As set forth, the occluder portion 24 may include an occluder material or a tissue growth member 28 attached thereto. The tissue growth member 28 may be a porous material, or other cell attaching material or substrate, configured to promote endothelization and tissue growth thereover. The tissue growth member 28 may extend over a proximal side of the medical device 20 and, particularly, over the occluder portion 24 and may extend over a portion of the anchor portion 26 and hinges coupling the anchor portion 26 to the occluder portion 24. As such, due to the shape of the frame components of the occluder portion 24, the tissue growth member 28 may include a proximal face that is generally convex to form an outer surface 40. The tissue growth member 28 may also include an inner surface 42 on its distal side that is generally concave shaped. In one embodiment, the tissue growth member 28 may extend primarily over an outside surface of frame components of the occluder portion 24 with a portion of the tissue growth member 28 extending on both the outside surface and the inside surface of the frame components of the occluder portion 24. In another embodiment, the tissue growth member 28 may extend primarily over both the outside surface and the inside surface of the frame components of the occluder portion 24 of the medical device 20. In another embodiment, the tissue growth member 28 may extend solely over the outside surface of the frame components of the occluder portion 24.

[0053] With respect to FIGS. 1A and 1B, the tissue growth member 28 may include one or more types of materials and/or layers. In one embodiment, the tissue growth member 28 may include a first material layer 30 and a second material layer 32. The first material layer 30 may primarily be an underside layer or base layer of the tissue growth member 28. The first material layer 30 may include porous and conformable structural characteristics. For example, the first material layer 30 may include a foam type material, such as, a polyurethane foam or any other suitable polymeric material, such as a polymer fabric, woven or knitted. The second material layer 32 may include one or more layers of, for example, an expanded polytetrafluoroethylene (ePTFE) material. The second material layer 32 may be attached to an outer surface of the first material layer 30 with, for example, an adhesive. In one embodiment, the second material layer 32 may include a first layer 32A, a second layer 32B, and a third layer 32C such that the first layer 32A may be directly attached to the first material layer 30 and the third layer 32C may be an outer-most layer covering the proximal side of the medial device 20 with the second layer 32B extending therebetween. The various layers of the second material

layer 32 may be bonded together by adhesives and/or by a thermal bonding heat process or other appropriate processes known in the art. In one particular example, the outer-most layers, such as the second and third layers 32B, 32C, may be formed of an ePTFE material having an internodal distance (sometimes referred to as pore size) of approximately 70μm to approximately 90μm. The first layer 32A of the second material layer 32, adjacent the first material layer 30, may be formed of an ePTFE material having a reduced internodal distance relative to the second and third layers 32B, 32C. For example, the internodal distance of the first layer 32A may be approximately 10μm. This first layer 32A may be bonded or adhered to the first material layer 30 using an adhesive material. Any other suitable sized layers of ePTFE may be employed, such as ePTFE having an internodal distance up to about 250μm. Further, there may be one or more additional layers, similarly sized to the first layer 32A, extending over a hub end 34 with flaps 36 (outlined with an "X" configuration) where the delivery system 22 interconnects with the medical device 20 (see FIG. 1).

[0054] The second material layer 32 made of ePTFE effectively prevents the passage of blood, due to the small internodal distance and pore size of the first layer 32A, while the larger internodal distance of other layers (e.g., 32B and 32C) enable tissue in-growth and endothelization to occur. Additionally, the first material layer 30, being formed of a polyurethane foam, enables aggressive growth of tissue from the LAA wall into the tissue growth member 28 at the inside or concave side of the medical device 20. Further, the first material layer 30 provides an exposed shelf 38 on the outer surface 40 around the periphery and distal end portion of the tissue growth member 28, which promotes aggressive fibroblast and tissue growth to further initiate endothelization over the outer surface 40 of the second material layer 32. It is noted that the use of appropriate adhesive materials between the first material layer 30 and the next adjacent layer 32A may also serve to fill in the pores of the next adjacent layer 32A and further inhibit possible flow of blood through the tissue growth member 28. Additional layers of ePTFE may also be included to the second material layer 32 of the tissue growth member 28.

[0055] With reference to FIGS. 2 and 3, description of the medical device 20 and its frame components will now be provided. FIG. 2 depicts the frame components in an assembled and fully deployed state and FIG. 3 depicts the frame components as cut from a flat sheet. As previously set forth, the medical device 20 includes an occluder portion 24 and an anchor

portion 26. The occluder portion 24 may include multiple occluder frame segments that may be interconnected to form the occluder portion 24. The occluder portion 24 may extend between a first end 44 and a second end 46 with face struts 50 and an occluder zig-zag portion 52 therebetween. Further, the occluder portion 24 includes base extensions 48 extending from the first end 44. The base extensions 48 may be coupled to a hub 54 via rings 56 with notches defined at an inner diameter in the rings 56. Each base extension 48 may extend from a proximal most portion of the occluder portion 24 or first end 44, the first end 44 being one end of each base extension 48 and face strut 50. Each base extension 48 may be sized and configured to be positioned around the hub 54 and held by one or more rings 56. Each base extension 48, at the first end 44, may extend to one face strut 50 of the occluder portion 54, the face strut 50 extending radially and distally from the first end 44. Each face strut 50 may include an extension 58 on a back side thereof, the extension 58 having a hook configuration sized and configured to hold a portion of the tissue growth member (not shown). Further, each face strut 50 extends to a v-extension 60 of the occluder zig-zag portion 52 such that distal ends of each v-extension 60 may be coupled to distal ends of adjacent v-extensions 60 (side-by-side) to define the occluder zig-zag portion 52. The occluder zig-zag portion 52 may enlarge radially and distally from the face struts 50 to a distal end or the second end 46 of the occluder portion 24. At the second end 46, the occluder portion 24 may include an occluder eyelet 62 sized configured to hingably couple to the anchor portion 26.

[0056] The anchor portion 26 may include multiple anchor frame segments that may be interconnected to form the anchor portion 26. The anchor portion 26 may extend between a first end 64 and a second end 66 with anchor actuator arms 68 and an anchor zig-zag portion 70 therebetween. The anchor actuator arms 68 may extend between the first end 64 and the anchor zig-zag portion 70. Each anchor actuator arm 68 may be configured to couple to a collar arrangement or splined sleeve 72 at the first end 64 of the anchor portion 26 such that the anchor actuator arms 68 are coupled as a unit or together via the splined sleeve 72. The splined sleeve 72 may be configured to actuate along an axis 74 of the medical device 20 to move the anchor portion 26 between the anchor deployed position and anchor non-deployed position (not shown), discussed in more detail hereafter.

[0057] With reference now to FIGS. 2, 3, and 3A, the anchor actuator arms 68 may also include a flexure portion 76. The flexure portion 76 defines a taper 82 and radius extending

along the radial length of the flexure portion 76 toward the anchor zig-zag portion 70 and then widens again at the anchor zig-zag portion 70. Such taper 82 along the radial length in the flexure portion 76 facilitates repetitious movement of the anchor portion 26 between the deployed position and the non-deployed position while also maintaining structural integrity of the anchor portion 26, and minimizing the stress and strain in the flexure portion 76 while facilitating a tight radius or loop. In one embodiment, the anchor actuator arms 68 may each include a coil (not shown) that may be wound around a portion of the actuator arm and over the flexure portion 76 with the ends of the coil secured to the anchor actuator arm 68. Such coil may substantially capture the anchor actuator arm 68 from extending in undesirable locations in the LAA should there be a facture or break in the anchor actuator arm 68.

[0058] Each flexure portion 76 of the anchor actuator arms 68 may extend to anchor v-extensions 78 such that the proximal ends of each anchor v-extension 78 may be coupled to proximal ends of adjacent anchor v-extensions 78 (similar to the occluder zig-zag portion 52) to form the anchor zig-zag portion 70. At the interconnection of the proximal ends of the anchor v-extensions 78 or the second end 66 of the anchor portion 26, such proximal ends define an anchor eyelet 80. The anchor eyelet 80 may be sized and configured to hingably couple to a corresponding occluder eyelet 62 of the occluder portion 24, as shown by dotted lines 84 (see FIG. 3).

[0059] With respect to FIG. 3A, the anchor struts or anchor v-extensions 78 of the anchor zig-zag portion 70 may include one or more hooks 86 or barbs that may extend at an acute angle 88 from the anchor portion 26 or anchor v-extensions and remote from the occluder portion 24. Such acute angle 88 may range between about forty-five degrees and about sixty degrees. Further, the hooks 86 may extend from the anchor v-extensions 78 with a predetermined height 90 so as to provide effective engagement with a tissue wall within the LAA, but not to the extent of piercing all the way through the tissue wall to cause effusions in the LAA. The hooks also include a thickness 92 (see FIG. 2). Such thickness 92 may be similar to the thickness of sheet material from which the fame components (i.e., occluder portion 24 and anchor portion 26) of the medical device 20 are cut.

[0060] With respect to FIG. 3, the occluder portion 24 and the anchor portion 26 are depicted in a pre-formed state subsequent to being laser cut from a flat sheet or sheet material of, for example, super elastic material, such as Nitinol. As such, the occluder portion 24 and the

anchor portion 26, in the pre-formed state, may be substantially planar and flat, after which, the frame components of the occluder portion 24 and/or the anchor portion 26 may then be heat-set to a desired shape and configuration, as known to one of ordinary skill in the art, similar to the fully deployed configuration (see FIG. 2). Further, as known to one of ordinary skill in the art, other processes may be employed, such as chemical etching and electro-polishing of the frame components. The occluder portion 24 may include ten face struts 50 and ten base extensions 48 with ten occluder eyelets 62 extending from the occluder zig-zag portion 52. Similarly, the anchor portion 26 may include ten anchor actuator arms 68 with ten anchor eyelets 80 extending from the anchor zig-zag portion 70. It should be noted that the occluder portion 24 and anchor portion 26 may include more or less frame components, such as the respective face struts 50 and anchor actuator arms 68, as known to one of ordinary skill in the art. As shown by dotted line 84, occluder eyelets 62 may be configured to couple to corresponding anchor eyelets 80 with a hinge-like coupling arrangement. Such may be employed by directly interlocking the occluder eyelets 62 with the anchor eyelets 80, as depicted in FIG. 2.

[0061] In another embodiment, the fame components of the occluder portion 24 and the anchor portion 26 may be laser cut from tubular material, rather than a flat sheet. In this embodiment, the frame components may be laser cut, and then heat set to the desired configuration, similar to that shown in FIG. 2. Various frame components of the occluder portion 24 and the anchor portion 26 may need to be modified as readily understood by one of ordinary skill in the art.

[0062] With reference to FIG. 3B, in another embodiment, the occluder portion 24 and the anchor portion 26 may be hingably coupled together by aligning the occluder eyelets 62 with the anchor eyelets 80 and positioning an individual interlocking piece 94 (shown in outline) within and through each of the respective aligned eyelets 62, 80. Such an interlocking piece 94 may be a polymeric filament or the like. Ends 96 of the interlocking piece 94 may be heated to form a bulbous shape (not shown) at the ends 96 that, upon cooling, harden and maintain the bulbous shape so as to prevent the respective aligned eyelets from de-coupling. In this manner, the occluder and anchor eyelets 62, 80 may be interlocked via the interlocking piece 94 to provide a hinged coupling arrangement for the anchor portion 26 to pivot relative to the occluder portion 24 and, more particularly, for the anchor portion 26 to pivot about the occluder eyelets

62. In another embodiment, the interlocking piece 94 may be a metallic rivet press fitted through aligned eyelets to provide a hinged coupling arrangement.

[0063] Now with reference to FIG. 4, a medical device delivery system 100 for delivering the medical device 20 to, for example, the LAA is provided. The medical device delivery system 100 may include the before-mentioned delivery system 22, the medical device 20, and a sheath 102. The delivery system 22 may include a delivery catheter 104 coupled to a handle 106 with the medical device 20 operatively coupled to the handle 106 at a distal end of the delivery catheter 104. The delivery catheter 104 may be sized and configured to be inserted through the sheath 102 such that the medical device 20 may be pushed through the sheath 102 to the distal end thereof. The medical device 20 may be partially exposed, at certain stages of delivery, as depicted. The functionality and detail of the various components of the medical device delivery system 100 will be described in detail hereafter.

[0064] With reference now to FIGS. 5, 5A, and 5B, a distal portion of the delivery catheter 104 will now be described, FIG. 5A being a cross-sectional view of the distal portion of the delivery catheter 104 along an axis 106 thereof depicted in FIG. 5 and FIG. 5B being an enlarged cross-sectional view of a portion of the same. The delivery catheter 104 may define a lumen 108 extending longitudinally therethrough between a proximal end (not shown) and a distal end 110 of the delivery catheter 104. In one embodiment, the delivery catheter 104 may include a shaft (not shown), a spiral cut portion 112, an inner distal tube 114, and a collet 116. Such distal portion of the delivery catheter 104 may include enhanced lateral flexiblity along the region of the spiral cut portion 112. That is, the distal portion of the delivery catheter 104 may be more flexible than portions of the delivery catheter 104 more proximal than the spiral cut portion 112. The spiral cut portion 112 may be formed by spirally or helically cutting a slit into the peripheral structure of the distal portion of the delivery catheter 104, as depicted. The inner distal tube 114 may be coupled to the delivery catheter 104 and within the lumen 108 of the distal portion of the delivery catheter 104. The collet 116 may be positioned and thermally coupled to the distal end 110 of the delivery catheter 104 and within the inner distal tube 114 with collet fingers 118 extending distally therefrom. The collet fingers 118 may be sized and configured to latch to the hub of the medical device (not shown) with nubs 120 or protrusions extending from free ends of the collet fingers 118. The collet fingers 118 are moveable outward, as indicated by arrows 122, and are biased to an inward position as shown. The collet 116 and

collet fingers 118 may be made from a metallic material, such as stainless steel or Nitinol, or any other suitable metallic material that can maintain a biasing force. Such inward biasing of the collet fingers 118 will be discussed in further detail hereafter. With respect to the enhanced flexibility of the delivery catheter 104 along the spiral cut portion 112, such enhanced flexibility facilitates the medical device to self-center upon being deployed in the LAA. In other words, the radial strength of the medical device (not shown) may be greater than the lateral forces of the delivery catheter 104 along the spiral cut portion 112 to, thereby, allow the medical device to self-center in the LAA in instances where the axis 106 of delivery catheter cannot be made concentric to the ostium of the LAA during delivery and deployment of the medical device.

[0065] Now with reference to FIGS. 6A, 6B, and 6C, description of steps that may be employed for loading the medical device 20 into the sheath 102 will now be provided. For example, the delivery catheter 104 may include a loader 124 sized and configured to facilitate loading the occluder portion 24 of the medical device 20 into the sheath 102 so that the delivery catheter 104 can push the occluder portion 24 through the sheath 102 to a distal portion thereof. With reference to FIG. 6A, the loader 124 may include a tube portion 126 and a handle portion 128. The loader 124 may be slideably positioned over the delivery catheter 104 such that the delivery catheter 104 extends through a bore defined through the loader 124. The loader 124 may be moved over the distal end of the delivery catheter 104 and manually moved or forced over the occluder portion 24 of the medical device 20 so that occluder portion 24 moves to a constricted position enclosed within the tube portion 126. However, prior to moving the loader 124 over the occluder portion 24, the anchor portion should be in a non-deployed position such that an actuator knob and plunger shaft of the handle 106 should be moved to a proximal position, as depicted in FIGS. 8 and 8A. Referring back to FIG. 6A, once the loader 124 is moved completely over the occluder portion 24, the medical device 20 may then be advanced through the sheath 102. The sheath 102, at this point, has already been advanced through the circulatory system to the heart with a distal portion of the sheath 102 positioned in the LAA (not shown), employing typical techniques known in the art.

[0066] As depicted in FIGS. 6B and 6C, the loader 124 may be inserted into the sheath 102 and, more particularly, a sheath hub 130. The sheath hub 130 may be coupled at a proximal end of the sheath 102. The components of the sheath hub 130 may include a valve 132 and a sheath fluid port 134. The valve 132 may be a rotating hemostasis valve, such as a Touhy

Borst valve or the like, configured to constrict or limit back-flow of blood from the sheath 102 upon rotation of the valve 132. The sheath fluid port 134 may extend from the sheath hub 130 and may be sized and configured to flush or aspirate air from the sheath 102 that may become trapped upon loading the medical device 20 into the sheath 102. In another embodiment, the loader 124 may also include a valve positioned around the delivery catheter 104 to maintain hemostasis while inserted into the sheath hub 130.

[0067] As set forth, the loader 124 may be mated or inserted into the sheath hub 130 with a snap or click fit via nubs 136 at the distal end of the tube portion 126 and a rib (not shown) within a bore 138 defined in the sheath hub 130. Once the loader 124 is positioned within the sheath hub 130, the delivery catheter 104 may be advanced through a lumen defined longitudinally in the sheath 102 such that the distal end of the delivery catheter 104 moves to a distal portion of the sheath 102 to expose a distal tip of the occluder portion 24 of the medical device 20 from the distal end of the sheath 102. With this arrangement, the distal tip of the occluder portion 24 may be exposed at the distal end of the sheath 102 and provides, due to the occluder material, a cushioned tip 140, without any exposed metal frame members, facilitating an atraumatic entry into the LAA, thereby, reducing the potential of effusions in the LAA.

[0068] Referring to FIGS. 7 through 11, deployment and detachment of the medical device 20 in an LAA 5 (shown in outline) relative to the delivery system 22 will now be described. With respect to FIGS. 7 and 8, upon the physician positioning the distal portion of the sheath 102 in the LAA 5 with the medical device 20 positioned at the distal portion of the sheath 102 with the cushioned tip 140 of the occluder portion 24 exposed at the distal end of the sheath 102, the physician may atraumatically position the distal portion of the sheath 102 to a desired location in the LAA 5. Once the desired location is determined, the physician can deploy the occluder portion 24 of the medical device 20. Such may be employed by simply withdrawing the sheath 102 or manually moving the sheath 102 in a proximal direction. As the sheath 102 is withdrawn, the occluder portion 24 self-expands to an occluder deployed position with the anchor portion 26 maintained in an anchor non-deployed position, as depicted in FIG. 8.

[0069] With respect to FIG. 8, a distal portion of the delivery catheter 104 coupled to the medical device 20 is shown. The delivery catheter 104 of this embodiment is coupled to the medical device 20 with an occluder hub nut 142 and collet 116 arrangement. For example, the

distal portion of the delivery catheter 104 includes the inner distal tube 114 and an actuator shaft 144. The actuator shaft 144 may include a layered coil, such as a speedometer cable, at a distal end portion thereof, which may be coupled to an inner distal connector 146 moveable within the collet 116. As previously set forth, the collet 116 may include collet fingers 118 extending distally from the collet 116. The inner distal connector 146 may include threads sized and configured to couple to the occluder hub nut 142 and, more particularly, to a threaded screw hole 148 defined in the occluder hub nut 142. The occluder hub nut 142, at a distal end thereof, may include the splined sleeve 72. As previously set forth, the splined sleeve 72 may be sized and configured to couple end portions of each of the anchor actuator arms 68. In another embodiment, the inner distal connector 146 and occluder hub nut 142 may be reversed such that the inner distal connector 146 includes a nut configuration and the occluder hub nut 142 includes a screw configuration. In either case, the medical device 20 may be threadably coupled to the delivery catheter 104.

[0070] With reference to FIG. 8A, one embodiment of the handle 106 is depicted. The handle 106 may include a handle housing 150, an anchor actuator release button 152, a plunger shaft 154, and an actuator knob 156. The handle housing 150 may be coupled to a proximal portion of the delivery catheter 104. The plunger shaft 154 and actuator knob 156 is shown in a first position that correlates to the anchor portion 26 being in a non-deployed position (see FIG. 8). The plunger shaft 154 and actuator knob 156 may be moved bi-linearly between a first position and a second position while depressing the anchor actuator release button 152. The functions and various components of the handle 106 will become apparent to one of ordinary skill in the art as discussed in further detail hereafter.

[0071] As depicted in FIGS. 8 and 8A, the anchor portion 26 of the medical device 20 is in an anchor non-deployed position. The actuator knob 156 and plunger shaft 154 are moved to the first position, as indicated by arrow 155 that corresponds to the anchor non-deployed position prior to loading the medical device 20 into the loader 124 and then into the sheath 102 (see FIGS. 6A and 6B). In the anchor non-deployed position, the inner distal connector 146 is threadably coupled to the occluder hub nut 142 and is positioned proximal the hub 54 with the anchor portion 26 in a first position or an anchors non-deployed position or, otherwise said, an anchors-in position with a portion of the anchor actuator arms 68 proximal the hub 54 and within a bore 158 defined in the hub 54. Further, in the anchor non-deployed position, the

plunger shaft 154 and knob 156 of the handle 106 may be in a proximal or first position as well. With this arrangement, a physician may determine the most favorable position of the medical device 20 within the LAA 5 with the occluder portion 24 in the deployed position prior to deploying the anchor portion 26.

[0072] Now turning to FIGS. 9 and 9A, the anchor portion 26 of the medical device 20 may be moved to an anchor deployed position or anchor-out or anchor second position once the physician determines the deployed occluder portion 24 is positioned in the LAA 5 as desired. Such anchor deployed position may be employed by manually moving the actuator knob 156 distally, as indicated by arrow 160, while also depressing the release button 152. In the anchor deployed position, the inner distal connector 146 and occluder hub nut 142 are also moved distally from the collet 116 and into the hub 54 or through the hub 54. Such linear distal movement also moves the anchor actuator arms 68, coupled to the splined sleeve 72, from a distal portion of the delivery catheter 104, through and out of the hub 54 to an everted, deployed position or an expanded position such that the anchor portion 26 unfolds and expands radially by pivoting or rotating at the hinged connection (i.e., at occluder and anchor eyelets 62, 80) between the occluder portion 24 and anchor portion 26. At the anchor deployed position, hooks 86 or tines of the anchor portion 26 are sized and configured to grab tissue and prevent movement so as to effectively anchor the medical device 20 within the LAA 5. Once the anchor portion 26 is deployed, the physician may view the medical device 20 through imaging techniques to ensure proper positioning of the medical device 20 in the LAA 5 while also performing stability tests by pulling proximally on the handle 106 to ensure the medical device 20 is effectively engaging the LAA 5. Such imaging techniques may be enhanced by markers strategically located on the medical device 20 and delivery catheter 104 to provide imaging information to the physician. Such markers may be made from a radiopaque material, such as platinum, gold, tantalum, or alloys thereof, or any other suitable radiopaque materials that are biocompatible.

[0073] The hooks 86 of the anchor portion 26 may extend both distally and proximally so as to substantially prevent movement of the medical device 20 in both the proximal and distal directions relative to the LAA 5. In one embodiment, the hooks 86 may include an acute angle 88 (FIG. 3A) relative to the axis 74 of the medical device 20 or the struts of the anchor zig-zag portion 70. The hooks 86 are configured to grab and may dig at the tissue of the LAA 5. Such

hooks 86 may be sized, oriented, and configured to prevent puncture or piercing of the hooks 86 all the way through the tissue of the LAA 5, but provide effective and even aggressive engagement with the tissue to provide safe anchoring of the medical device 20 in the LAA 5.

[0074] If the physician is dissatisfied with the location or engagement of the medical device in the LAA, the physician may readily disengage the anchor portion 26 from the tissue of the LAA by simply moving the actuator knob 156 in the proximal direction to the first position (FIG. 8A), which simultaneously moves the actuator shaft 144 proximally and, thus, pivots the anchor portion 26 to a disengaged or anchor non-deployed position. The physician may then re-position the occluder portion 24 within the LAA 5 and, once satisfied with the location of the occluder portion 24 in the LAA 5, the physician may readily move the actuator knob 156 forward or a distal direction to pivot and re-engage the anchor portion 26 with the tissue of the LAA 5. The physician may then determine again through imaging and stability tests if the medical device 20 is positioned in the LAA 5 in an effective and safe manner that satisfies the physician. As can be readily understood, the steps of re-positioning the occluder portion 24 and re-engaging the anchor portion 26 of the medical device 20 can be repeated until the physician is satisfied.

[0075] Now referring to FIGS. 10, 10A, and 10B, the functions of releasing the medical device 20 will now be described. The medical device 20 may be detached or released by unscrewing the inner distal connector 146 from the screw hole 148 defined in the occluder hub nut 142. Such releasing may be employed by rotating the actuator knob 156 of the handle 106 counter-clockwise several turns, as indicated by arrow 162, until the inner distal connector 146 unwinds from the screw hole 148 of the occluder hub nut 142. The actuator knob 156 may then be pulled proximally back to the first position, as indicated by arrow 164, while depressing the release button 152, which facilitates movement of the inner distal connector 146 in the proximal direction. As the inner distal connector 146 is moved proximally through or into the collet 116, the collet fingers 118 extending distally from the collet 116 collapse inward since the collet fingers 118 may be biased toward an inward position. In other words, prior to the inner distal connector 146 being unwound, the collet fingers 118 may be held in an outer position substantially concentric with the axis 74 of the medical device 20, which maintains the delivery catheter 104 locked to the medical device 20. The collet fingers 118 include outward extending nubs 120 that are held against an abutment 166 within the hub 54 (also shown in FIG. 9). In this

manner, once the inner distal connector 146 is unscrewed from the occluder hub nut 142 and moved to a proximal position away from the collet fingers 118, the collet fingers 118 flexibly collapse with a bias to an inward position to move the nubs 120 away from the abutment 166 in the hub 54, thereby, unlocking or unlatching the delivery catheter 104 from the medical device 20. The delivery catheter 104 may then be removed from the medical device 20 with the collet fingers 118 collapsed and the nubs 120 moved proximally from the abutment 166 within the hub 54 as depicted in FIG. 11.

[0076] With respect to FIGS. 2 and 12, a spring 170 sized and configured to close-off the bore 158 of the hub 54 once the delivery catheter 104 is released from the medical device 20 is depicted. The spring 170 may include a clover configuration or any other suitable configuration to effectively close-off the hub 54. The spring 170 may move between a first biased position and a second relaxed position. The first biased position of the spring 170 (shown in outline form) is depicted in FIG. 12, which is the position of the spring 170 with the delivery catheter 104 coupled to the hub 54. Once the delivery catheter 104 is removed from the hub 54, the spring 170 moves to the second relaxed position (see FIG. 2) with occluder flaps 36 (see also FIG. 1) substantially minimizing any through hole leading through the hub 54. In the second relaxed position of the spring 170, the bore 158 defined in the hub 54 is substantially closed-off with occluder flaps 36, leaving only a cross-like slit (FIG. 1). As previously set forth, the spring 170 may be embedded in the occluder material or tissue growth member 28 or attached to an inner occluder material surface such that the spring 170 may include various layers and/or folds of, for example, ePTFE, with one or more slits defining the flaps 36 that facilitates interconnection of the delivery catheter 104 to the hub 54 when the spring 170 is in the first biased position but then may substantially close-off the bore 158 defined in the hub 54 when in the second relaxed position. Such arrangement is advantageous to substantially prevent blood flow through the hub 54 or to substantially prevent the potential of migrating emboli or thrombus from the hub 54 itself once the medical device 20 is positioned in the LAA.

[0077] Now referring to FIGS. 13A and 13B, actuation of the release button 152 of the handle 106 is depicted. The handle housing 150 defines a hole 172 that may extend along a longitudinal axis of the handle housing 150 and may be sized to hold the plunger shaft 154 to move bi-linearly therethrough. The handle housing 150 may also define a hollow portion 174 therein. The plunger shaft 154 may extend through the handle housing 150 and be coupled to

components coupled to actuator shaft 144 and the inner distal connector 146 at the distal portion of the delivery catheter 104 (see FIG. 9). The handle 106 also may include a leaf spring 176 configured to bias against the release button 152. The release button 152 may include a button post 178. The leaf spring 176 may be coupled to the button post 178 to bias the release button 152 to a non-depressed position or first position. The plunger shaft 154 may also include two travel stops 180 fixed thereto. By depressing the release button 152 to a depressed position or second position, the button post 178 depresses the leaf spring 176 and moves within a cavity 182. Once the button post 178 is moved within the cavity 182, the travel stops 180 coupled to the plunger shaft 154 may then freely move distally (and then back proximally) past the button post 178 a predetermined distance gauged by the travel stops 180 within the hollow portion 174 defined by the handle housing 150. In this manner, the plunger shaft 154 may move the predetermined distance which directly corresponds with the distance or length moved by the actuator shaft 144 and actuation of the anchor portion of the medical device 20 between the anchor non-deployed position and anchor deployed position (see FIGS. 8 and 9).

[0078] Referring back to FIG. 8, in another embodiment, the sheath 102 may include an imaging device 190. The imaging device 190 may be sized and configured to be positioned at a distal end of the sheath 102 and may include one or more lines 192 extending from the imaging device 190 and proximally toward the sheath hub 130 (FIG. 5C) for transferring imaging information from the imaging device 190 to a computer and a display (not shown), as known to one of ordinary skill in the art, and viewable by the physician in real-time. The sheath 102, upon being withdrawn from the occluder portion 24, being positioned substantially concentric or proximal of the medical device 20, may be at a vantage point and location in the left atrium adjacent the LAA to provide detailed imaging information otherwise not readily available to the physician. The imaging device 190 may be an ultrasound imaging device or any other suitable imaging device known in the art.

[0079] Now with reference to FIGS. 14A and 14B, another embodiment of a medical device 200 coupled to a distal portion of a delivery catheter 202, the medical device 200 (depicted in a simplistic profile view) in a partially deployed position and fully deployed position, respectively, is provided. As in previous embodiments, the medical device 200 may include an occluder portion 204 and an anchor portion 206 that may be separately deployed. For example, once a sheath 208 is positioned in the LAA (not shown) with the medical device 200 at

a distal end portion thereof, the sheath 208 is withdrawn to deploy an occluder portion 204 of the medical device 200 or to partially deploy the medical device 200. Once the occluder portion 204 is deployed, then the anchor portion 206 may be deployed, to fully deploy the medical device 200.

[0080] In this embodiment, the occluder portion 204 is substantially similar to the previous embodiment, except the tissue growth member 210 is attached to an outer surface of the frame components of the occluder portion 204. The tissue growth member 210 of this embodiment may include similar layering of one or more materials as set forth for the tissue growth member described in detail relative to FIG. 1B. Further, although the anchor portion 206 may be hingably coupled to the occluder portion 204 with a hinge arrangement 212 and, in many respects functions similar to the previous embodiment, the anchor portion 206 of this embodiment includes multiple separate and distinct anchor frame segments 214, best shown in FIG. 15.

[0081] With reference to FIG. 15, the frame components of the occluder portion 204 and the anchor portion 206 are depicted in, for example, a preformed state subsequent to being laser cut from a flat sheet of super elastic material, such as Nitinol. For simplicity purposes, there is only one anchor frame segment 214 shown, but in this embodiment, there may be five anchor frame segments 214 to correspond and couple to, for example, occluder frame apertures 216 of the occluder portion 204. As shown, the frame components of the occluder portion 204 may be substantially similar to the frame components of the occluder portion 204 described in the previous embodiment relative to FIG. 3.

[0082] With respect to the anchor frame segments 214, each anchor frame segment 214 may extend between a first end 218 and second end 220 with two actuator arms 222 extending therebetween such that each anchor frame segment 214 may exhibit a "Y" or "V" configuration in the pre-formed state. Each actuator arm 222 may include an anchor hinge aperture 224 at the second end 220 and, at the first end 218, the actuator arm 222 may be coupled to a collar arrangement 226 or splined sleeve, similar to that of the previous embodiment. With this arrangement, the actuator arms 222, as depicted in FIGS. 14A and 14B, may pivot about the occluder portion 204 at the hinge arrangement 212. Further, the actuator arms 222 may form a loop configuration or loop extension in the anchor deployed position with

the first end 218 of the actuator arms 222 moveable or actuatable through the hub 228 of the medical device 200.

[0083] Now with reference to FIGS. 16A, 16B, and 17, another embodiment of a medical device 250 depicted in a partially deployed position (FIG. 16A) and a fully deployed position (FIG. 16B), similar to previous embodiments, is depicted. In this embodiment, the occluder portion 252 can be similar to the previous embodiments, but the anchor portion 254 may include an anchor zig-zag portion 256 and loop extensions 258 or actuator arms as separate anchor frame components. In this embodiment, the medical device 250 may include a dual hinge arrangement. For example, the occluder portion 252 may be hingably coupled to an anchor zig-zag portion 256 with a first hinge arrangement 260 and the anchor zig-zag portion 256 may be hingably coupled to the loop extensions 258 with a second hinge arrangement 262. The profile and functionality of the medical device 250 may be similar to the previous embodiments, except the loop extensions 258 may take a more direct inward angle from the anchor zig-zag portion 256 due to the second hinge arrangement 262 therebetween. Similar to the embodiment of FIG. 15, this embodiment may include ten loop extensions 258 or actuator arms, though for simplicity purposes only two loop extensions 258 (as a single loop extension segment) are shown in FIG. 17. It should be noted that the embodiments of FIGS. 14 and 16 also provide the feature to facilitate a cushion tip (not shown) as depicted in FIG. 7when constricted in the sheath 264. Further, it should be noted the embodiments depicted and described relative to FIGS. 1, 14 and 16 include similar features and structure and, therefore, the descriptions provided in one embodiment may also be applicable to the other described embodiments.

[0084] Other features and components may also be incorporated with various embodiments described herein including those described by U.S. Patent Application No. 12/818,046, filed on June 17, 2010, which is incorporated by reference herein in its entirety.

[0085] While the invention may be susceptible to various modifications and alternative forms, specific embodiments have been shown by way of example in the drawings and have been described in detail herein. However, it should be understood that the invention is not intended to be limited to the particular forms disclosed. Rather, the invention includes all modifications, equivalents, and alternatives falling within the spirit and scope of the invention as defined by the following appended claims.

CLAIMS

What is claimed is:

1. A medical device system for modifying a left atrial appendage ("LAA") of a heart, the medical device system comprising:

a sheath having a length and defining a sheath lumen extending through the length of the sheath; and

a delivery system including a delivery catheter extending between a proximal end and a distal end, a handle coupled to the proximal end of the delivery catheter, and a medical device operatively coupled to the handle and coupled to the distal end of the delivery catheter, the medical device comprising:

a hub including a bore defining an axis;

an occluder portion coupled to the hub, the occluder portion configured to be moved to an occluder non-deployed position with the occluder portion within a distal portion of the sheath, and the occluder portion configured to be moved to an occluder deployed position upon the sheath being moved proximally relative to the occluder portion; and

an anchor portion extending between a first end and a second end, the first end configured to be operatively coupled to the handle, the second end configured to be coupled to the occluder portion, wherein, upon the occluder portion being in the occluder deployed position, the anchor portion is configured to move relative to the occluder portion between an anchor non-deployed position and an anchor deployed position.

2. The medical device system of claim 1, wherein the second end of the anchor portion is coupled to the occluder portion with a hinge arrangement such that the anchor portion pivots relative to the occluder portion upon the anchor portion being moved between the anchor non-deployed position and the anchor deployed position.

3. The medical device system of claim 1, wherein the second end of the anchor portion is pivotably coupled to the occluder portion.

4. The medical device system of claim 1, wherein the first end of the anchor portion is moveable along the axis of the hub to move the anchor portion between the anchor non-deployed position and the anchor deployed position.

5. The medical device system of claim 1, wherein the handle comprises a plunger shaft that is moveable between a first position and a second position that corresponds with the anchor non-deployed position and the anchor deployed position, respectively.

6. The medical device system of claim 1, wherein the anchor portion comprises multiple anchor actuator arms each extending to a v-extension, the v-extension including hooks to engage tissue of the LAA.

7. The medical device system of claim 1, wherein the anchor portion comprises an anchor zig-zag portion hingably coupled to the occluder portion.

8. The medical device system of claim 1, wherein the occluder portion comprises an occluder zig-zag portion and the anchor portion comprises an anchor zig-zag portion.

9. The medical device system of claim 1, wherein the occluder portion comprises a tissue growth member extending over a proximal face of the occluder portion and extending over a portion of the anchor portion.

10. The medical device system of claim 1, wherein the distal end of the delivery catheter is threadably connected to the medical device.

11. The medical device system of claim 1, wherein the delivery catheter comprises:

an actuator shaft configured to be actuated by actuation of the handle; and

multiple fingers extending distally from the distal end of the delivery catheter, the multiple fingers extending over the actuator shaft so that the multiple fingers maintain a latched position to the hub.

12. The medical device system of claim 11, wherein the medical device is configured to detach from the delivery catheter upon proximal movement of the actuator shaft to a position proximal of the multiple fingers such that the multiple fingers collapse to an inward unlatched position.

13. The medical device system of claim 1, wherein the sheath comprises an imaging device at a distal end of the sheath.

14. A medical device for modifying a left atrial appendage ("LAA") of a heart, the medical device comprising:

a hub defining an axis;

an occluder portion coupled to the hub, the occluder portion independently moveable relative to the anchor portion between an occluder non-deployed position and an occluder deployed position; and

an anchor portion hingably coupled to the occluder portion, the anchor portion pivotable relative to the occluder portion between an anchor non-deployed position and an anchor deployed position upon the occluder portion being in the occluder deployed position.

15. The medical device of claim 14, wherein the anchor portion comprises anchor actuator arms with a portion actuatable substantially along the axis of the hub to move the anchor portion between the anchor non-deployed position and the anchor deployed position.

16. The medical device of claim 14, wherein the anchor portion comprises multiple anchor actuator arms each extending to a v-extension, the v-extension including hooks to engage tissue of the LAA.

17. The medical device of claim 14, wherein the anchor portion comprises an anchor zig-zag portion hingably coupled to the occluder portion.

18. The medical device of claim 14, wherein the occluder portion comprises an occluder zig-zag portion and the anchor portion comprises an anchor zig-zag portion, the occluder zig-zag portion hingably coupled to the anchor zig-zag portion.

19. The medial device of claim 14, wherein the occluder portion comprises a tissue growth member extending over a proximal face of the occluder portion and extending over a portion of the anchor portion.

20. The medical device of claim 14, further comprising a sheath configured to move the occluder portion between the occluder non-deployed configuration and the occluder deployed configuration, the sheath including an imaging device at a distal end of the sheath.

21. A method for modifying a left atrial appendage ("LAA") of a heart, the method comprising:

advancing a medical device coupled to a distal end of a delivery catheter through a sheath positioned in the vasculature and into the LAA of the heart, the medical device including an occluder portion and an anchor portion, the anchor portion coupled to the occluder portion;

deploying the occluder portion of the medical device from the sheath in the LAA with the anchor portion maintaining a non-deployed position; and

actuating the anchor portion of the medical device between the non-deployed position and a deployed position while the occluder portion of the medical device is deployed.

22. The method according to claim 21, wherein the actuating the anchor portion comprises pivoting the anchor portion at a hinged coupling between the anchor portion and the occluder portion.

23. The method according to claim 21, wherein the actuating the anchor portion comprises actuating actuator arms of the anchor portion substantially along an axis of the medical device.

24. The method according to claim 21, wherein the deploying the occluder portion comprises manually withdrawing the sheath from over the occluder portion of the medical device.

25. The method according to claim 21, further comprising disengaging the medical device from fingers extending from the distal end of the delivery catheter by proximally moving an actuator shaft from the medical device to collapse the fingers from a hub of the medical device.

26. The method according to claim 21, further comprising imaging the medical device relative to the LAA from a distal end of the sheath.

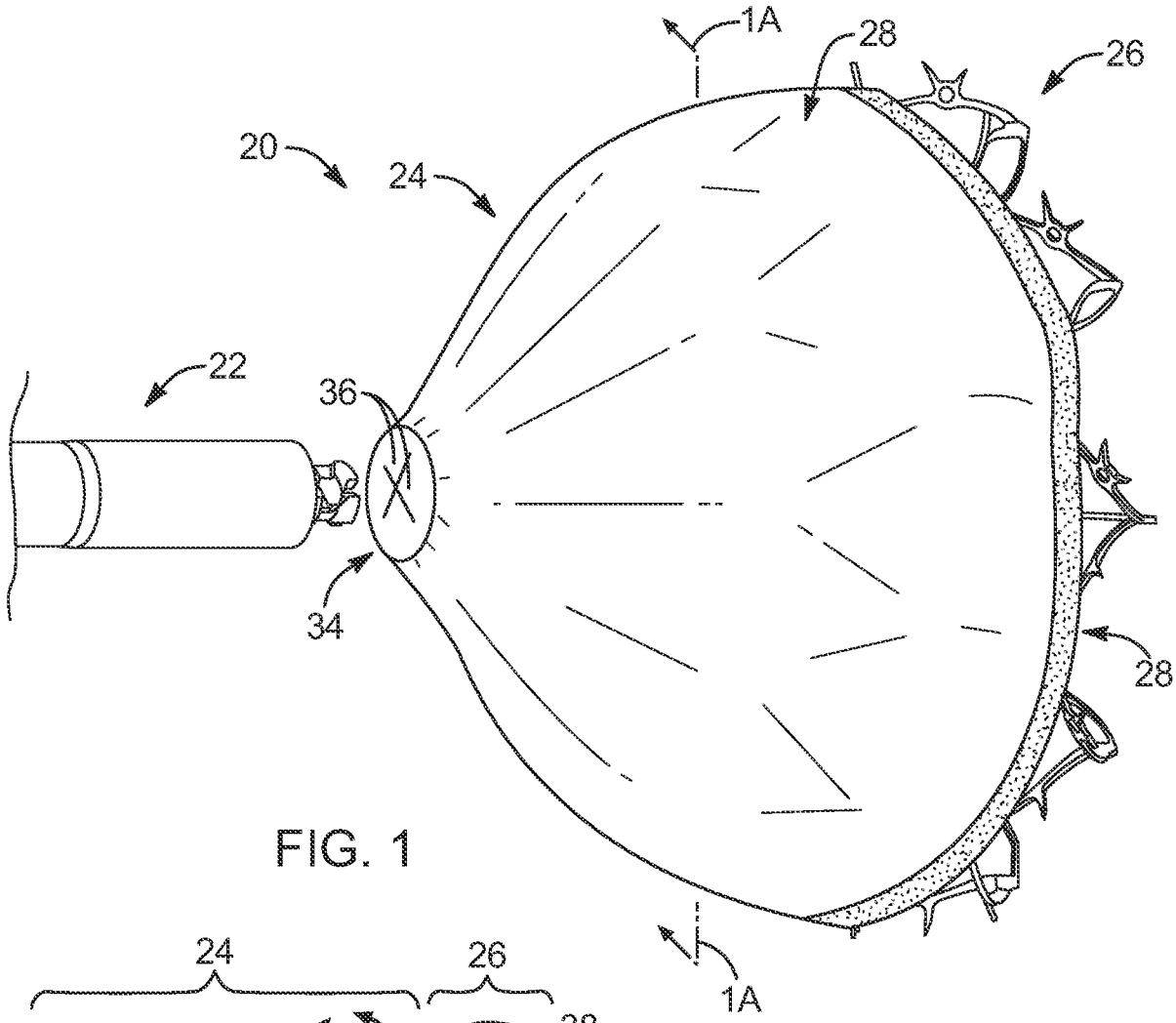

FIG. 1

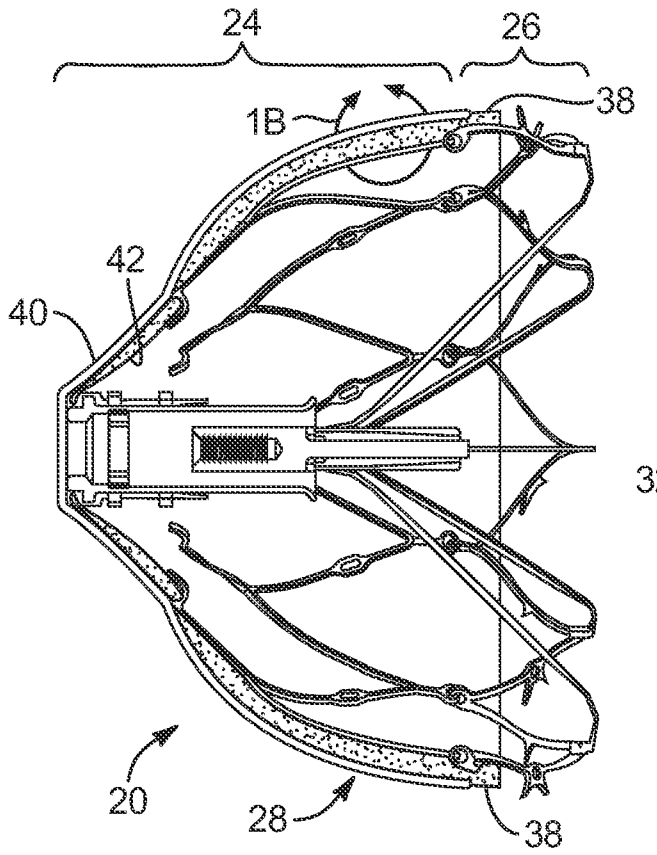

FIG. 1A

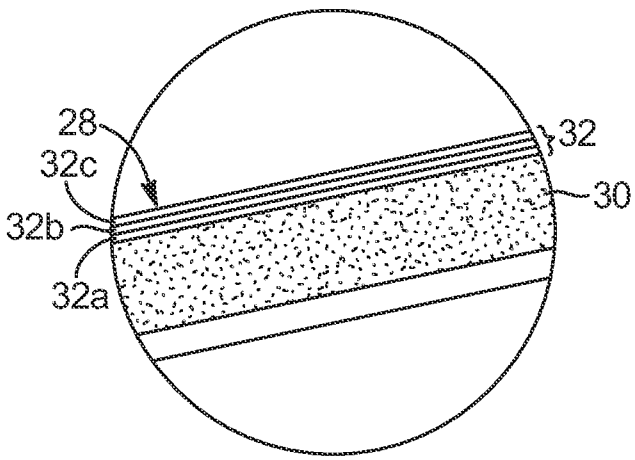

FIG. 1B

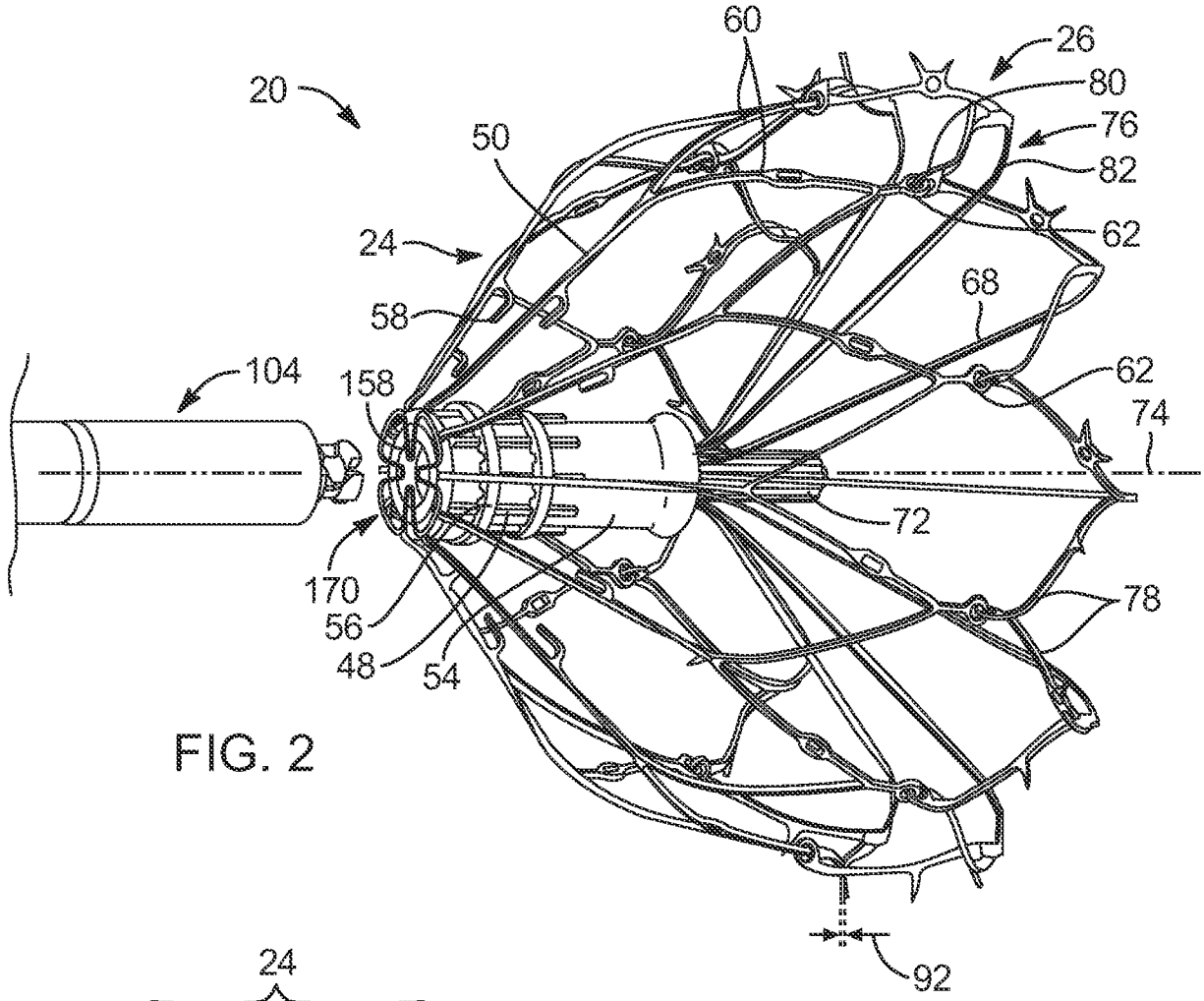
60
26
20
80
50
76
82
24
62
68
58
104
158
62
74
72
170
78
56
48
54
92

FIG. 2

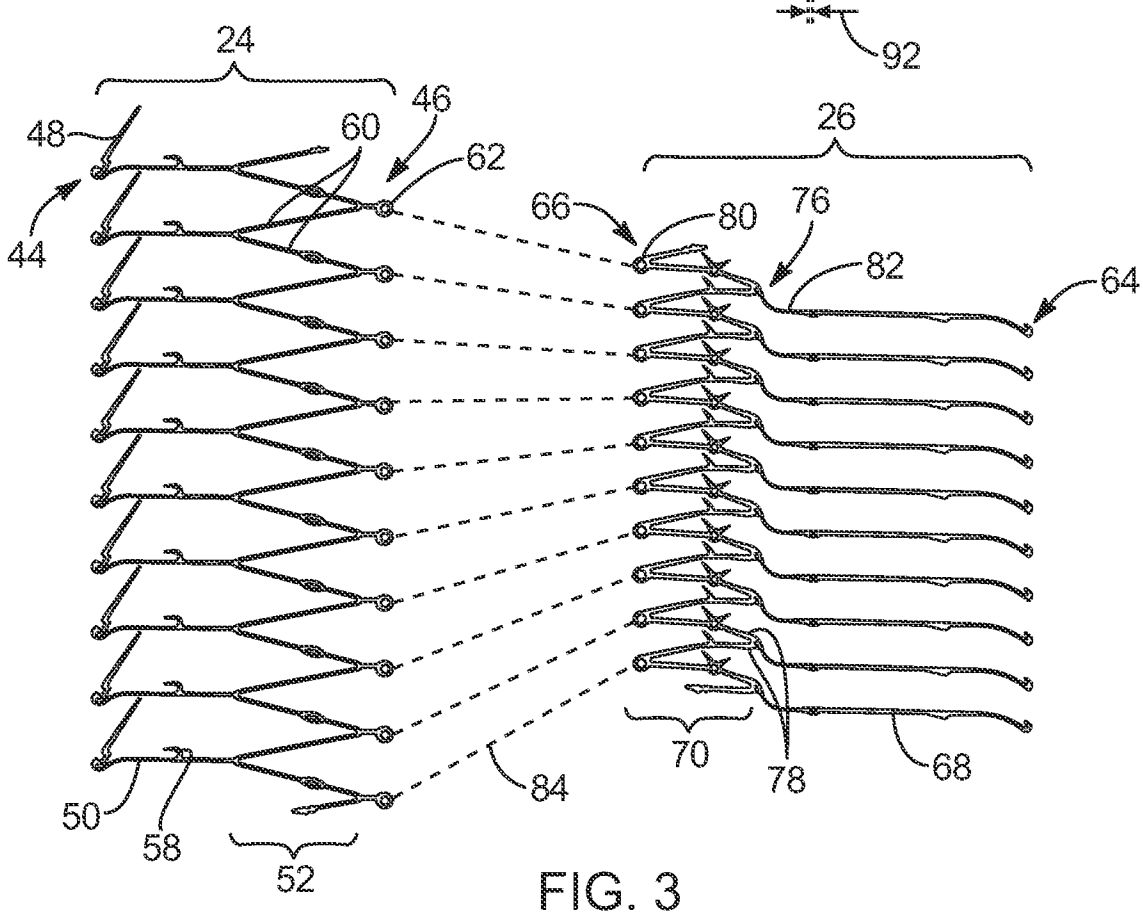
24
46
48
60
62
26
66
80
76
44
82
64
70
78
68
84
50
58
52

FIG. 3

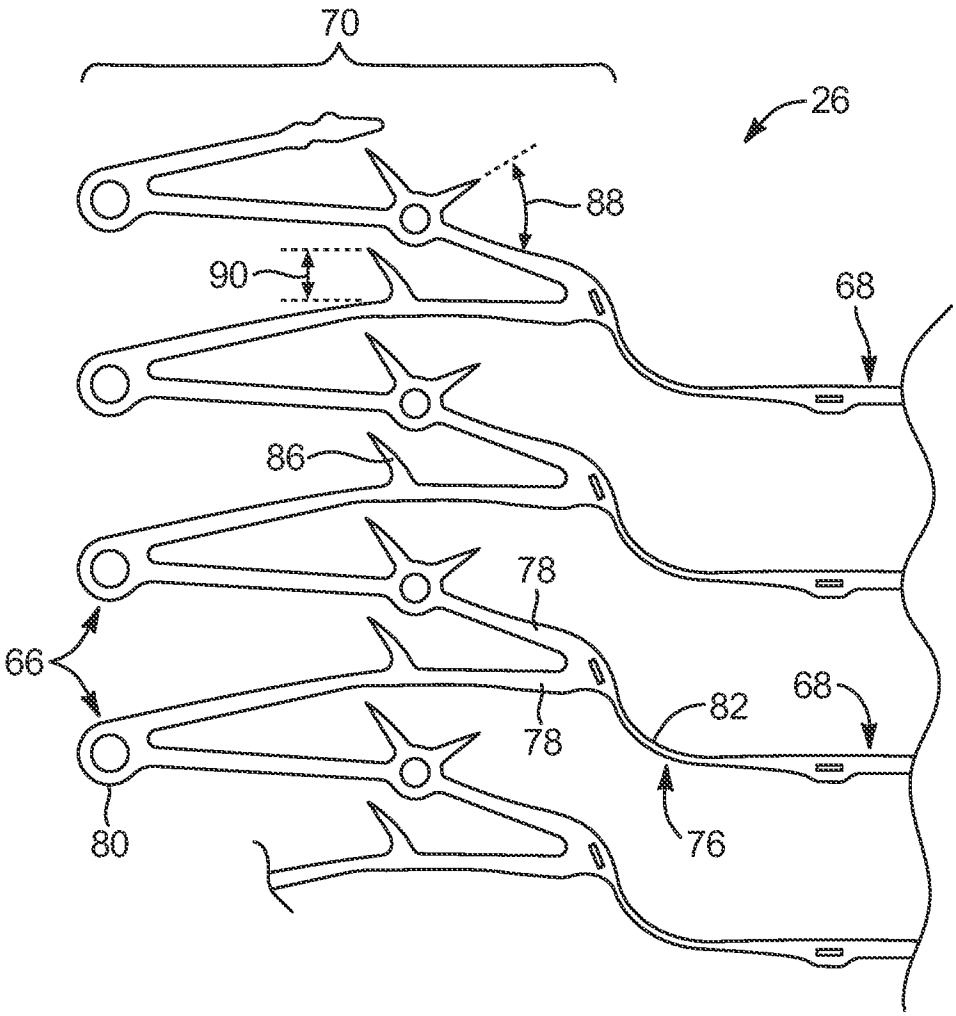

FIG. 3A

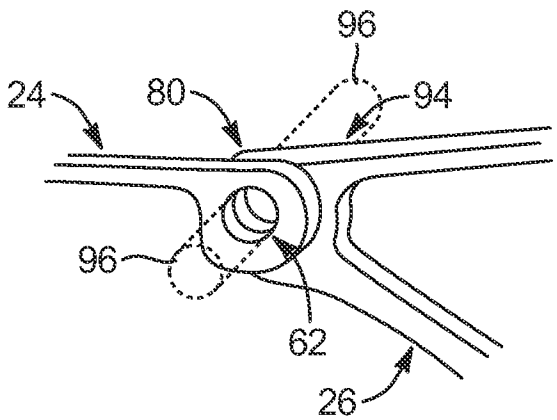

FIG. 3B

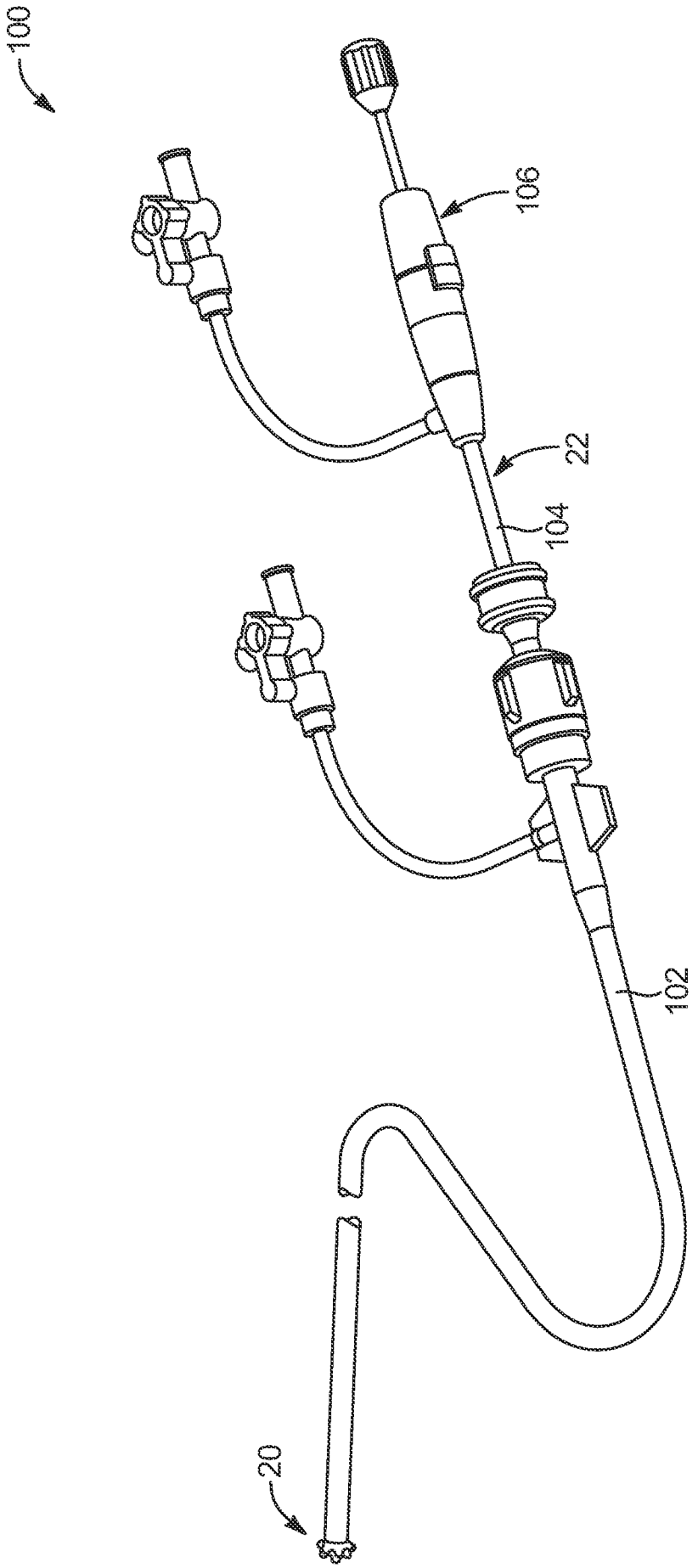

FIG. 4

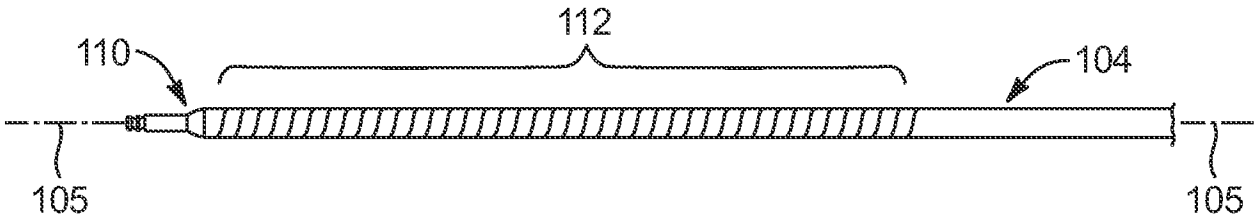

FIG. 5

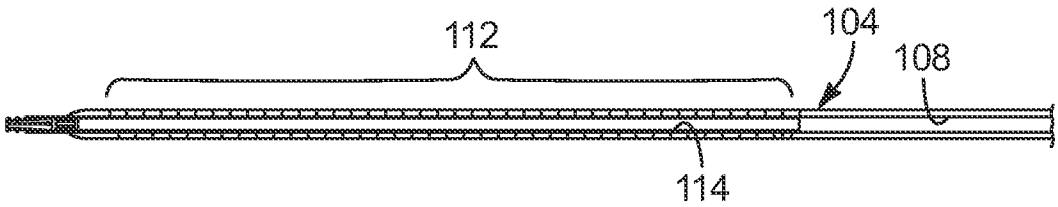

FIG. 5A

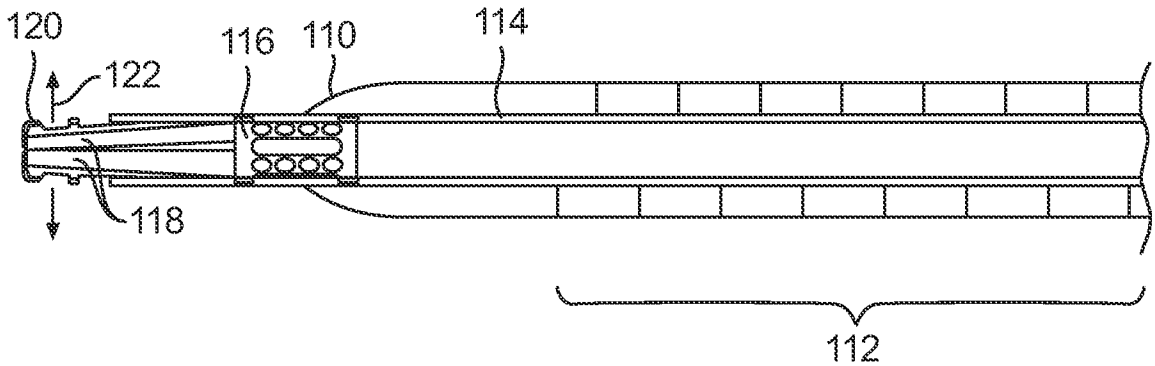

FIG. 5B

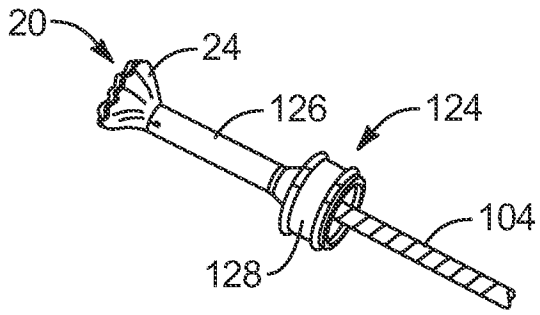

FIG. 6A

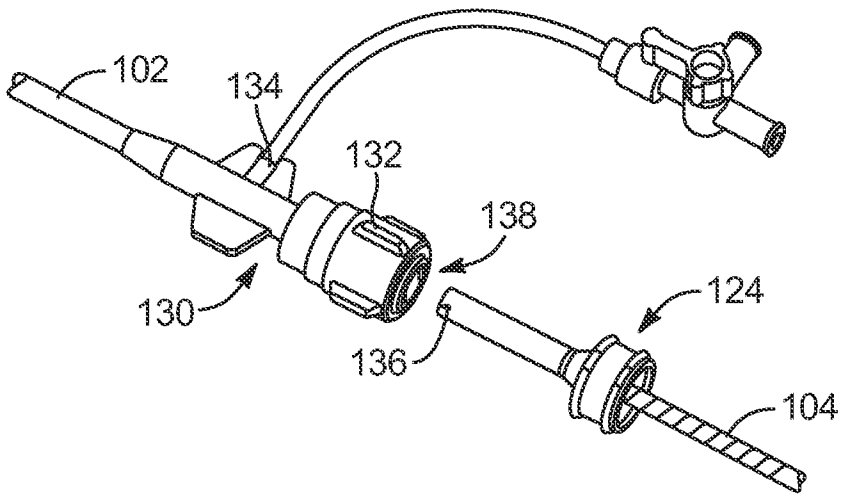

FIG. 6B

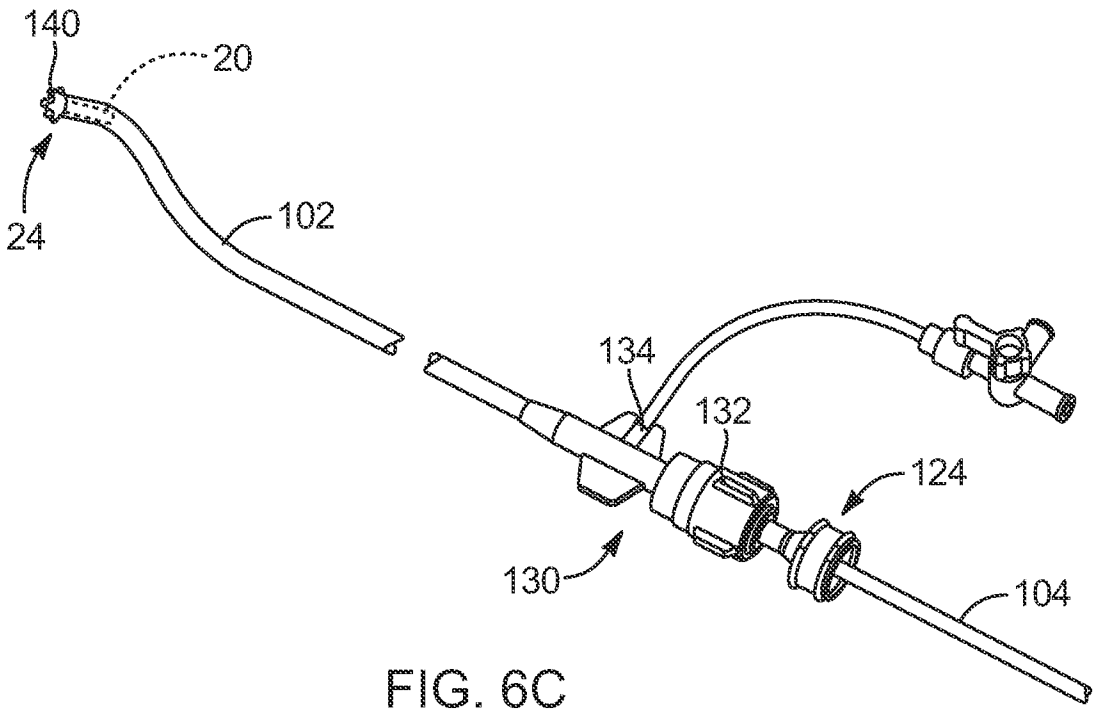

FIG. 6C

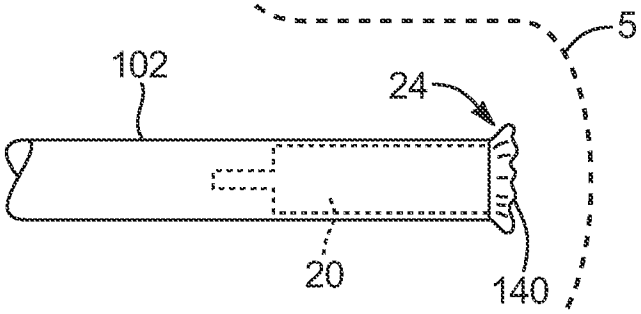

FIG. 7

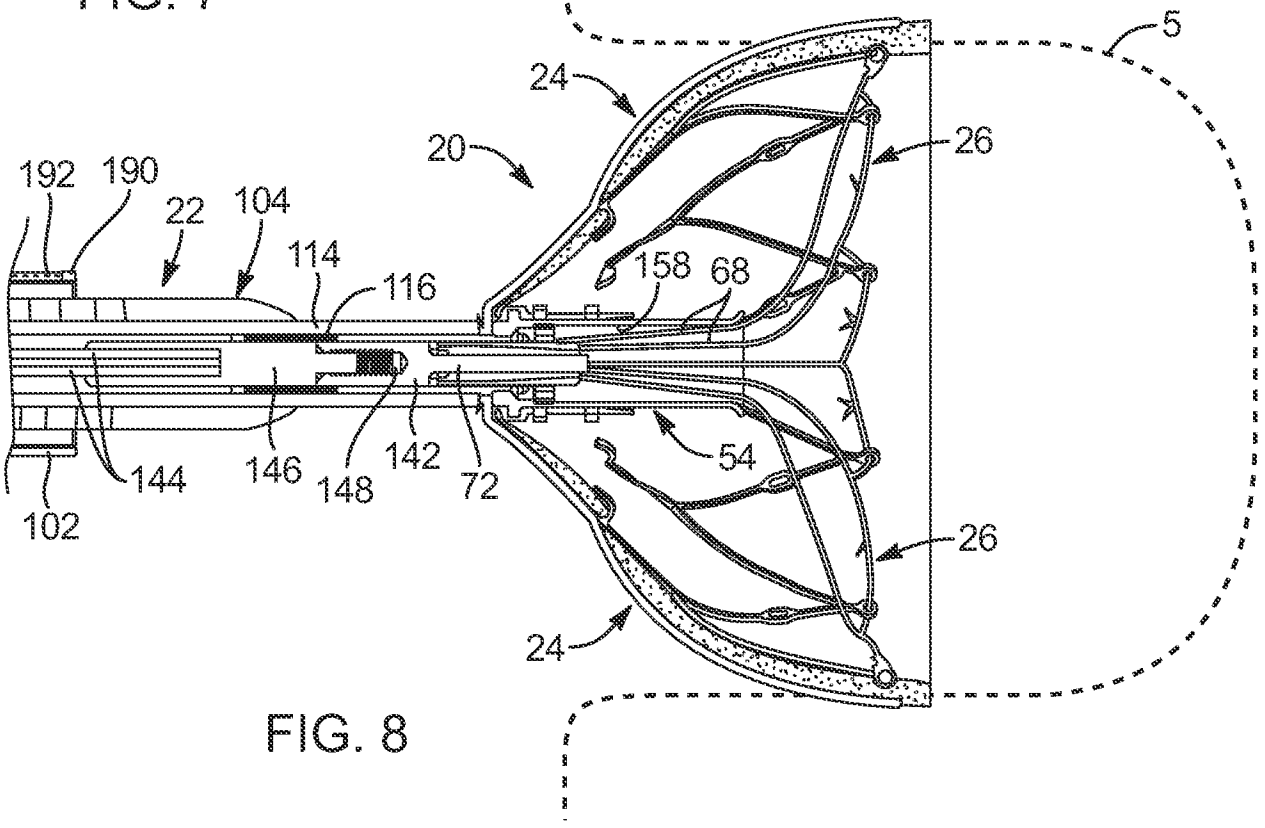

FIG. 8

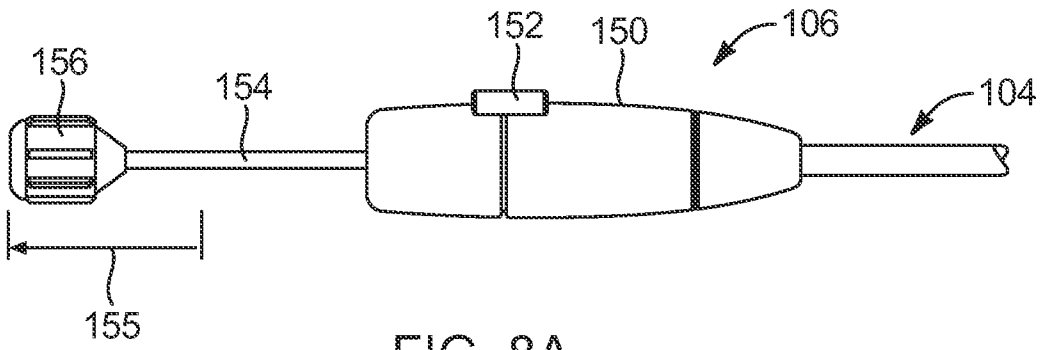

FIG. 8A

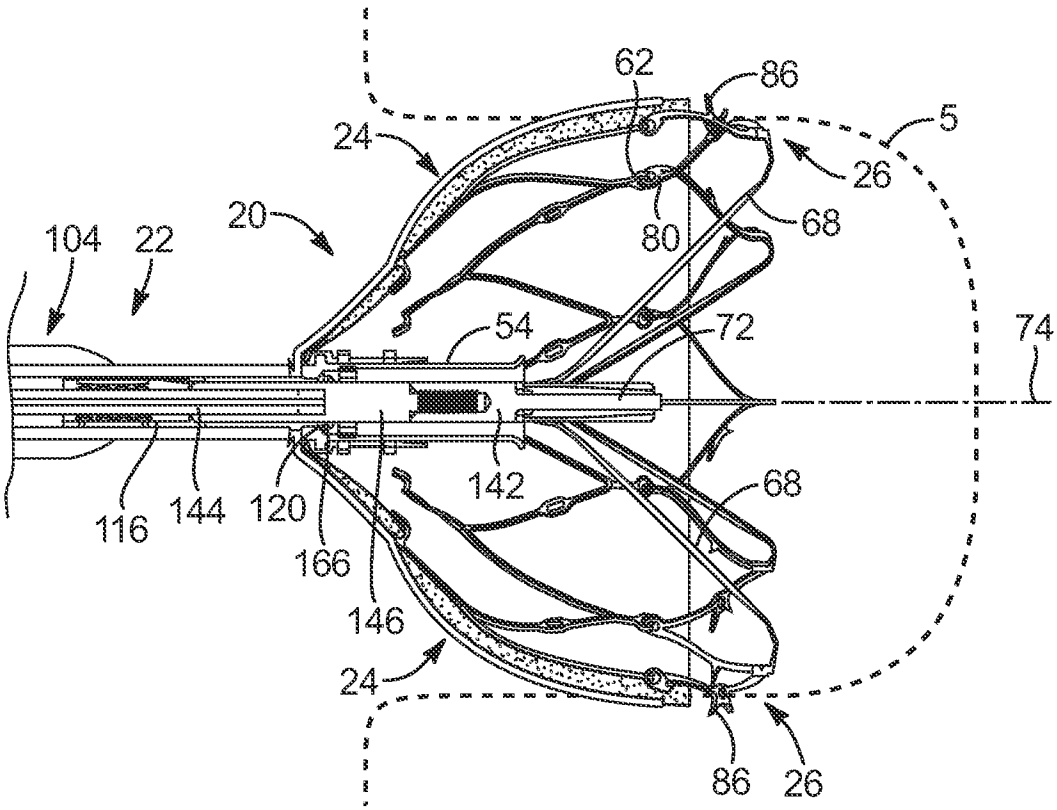
62
86
5
24
26
20
80
68
104
22
54
72
74
142
68
116
144
120
166
146
24
86
26

FIG. 9

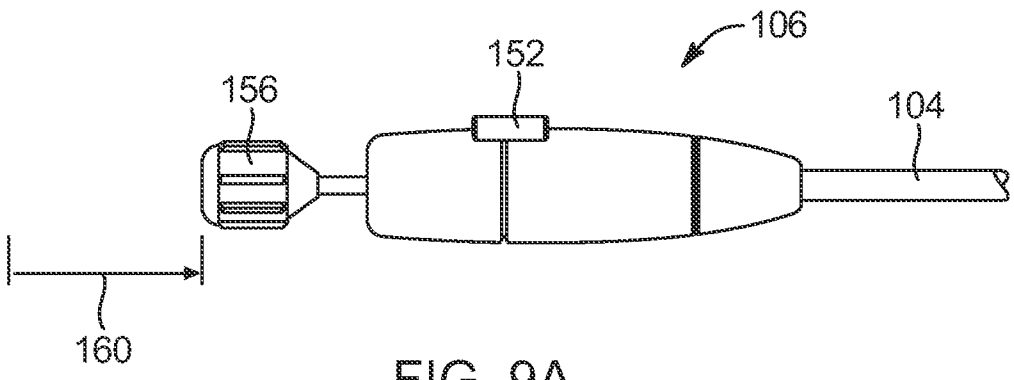
106
152
156
104
160

FIG. 9A

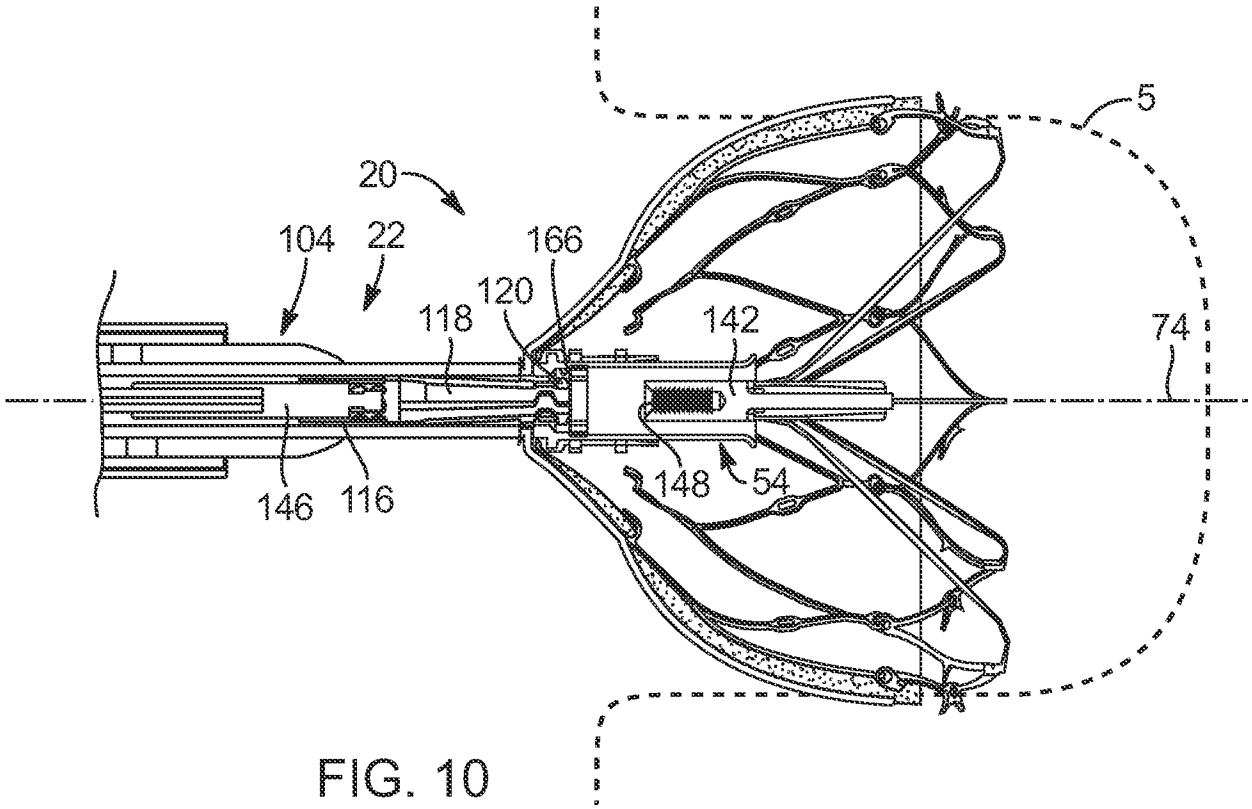

FIG. 10

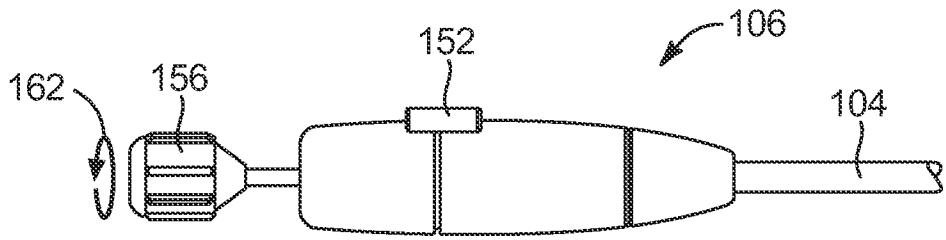

FIG. 10A

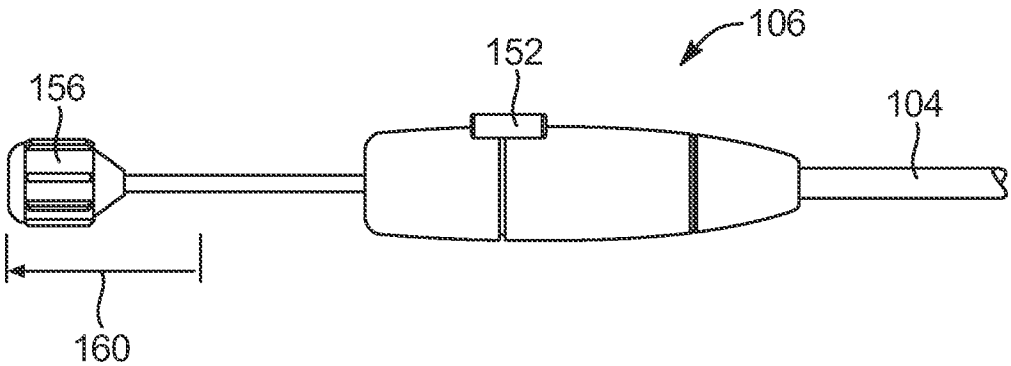

FIG. 10B

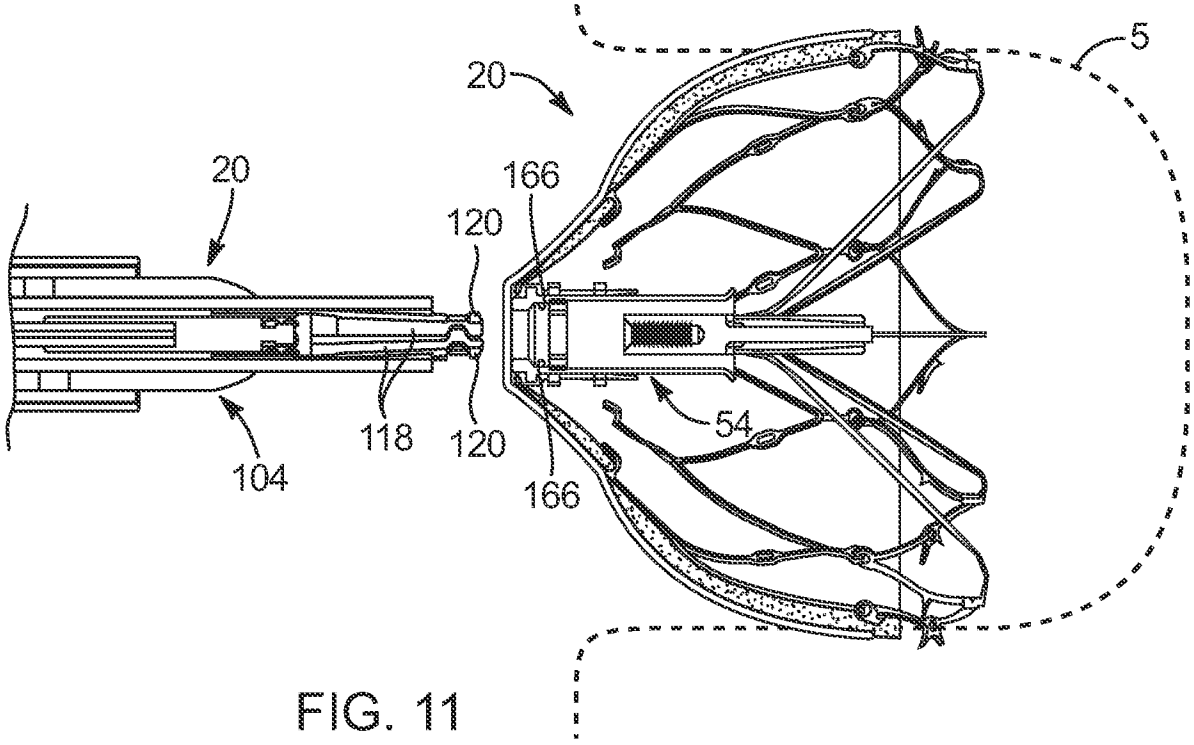

FIG. 11

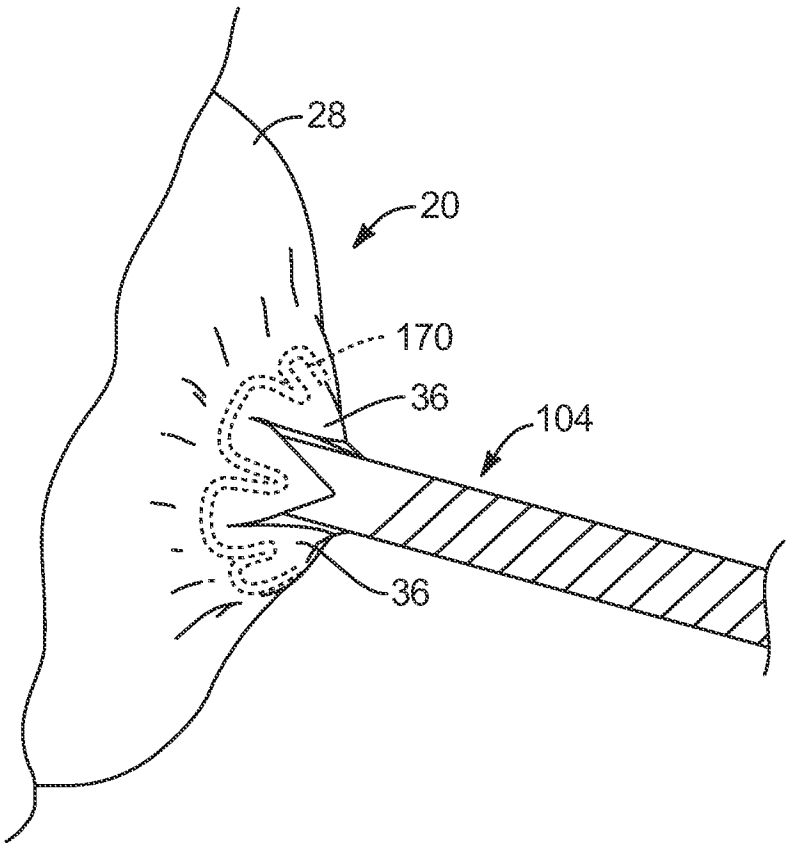

FIG. 12

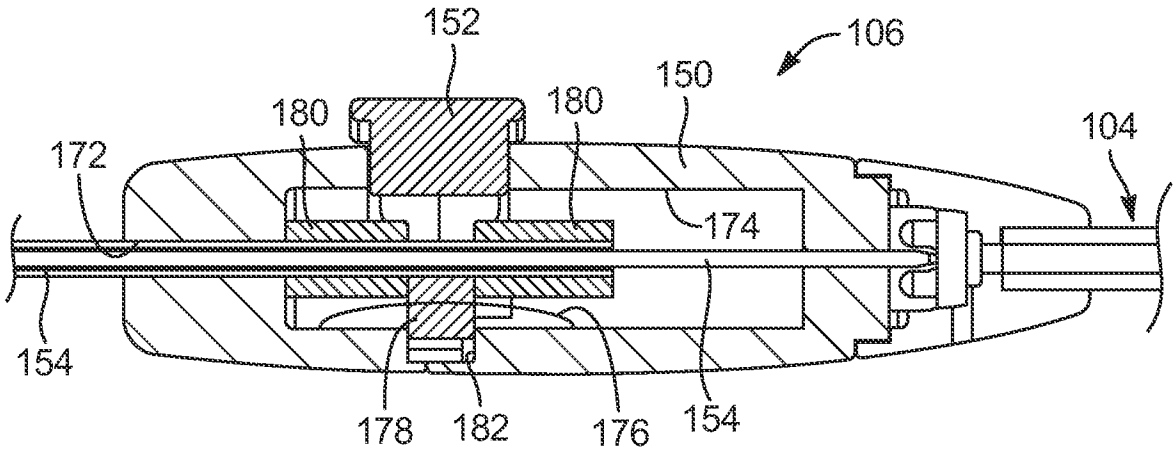

FIG. 13A

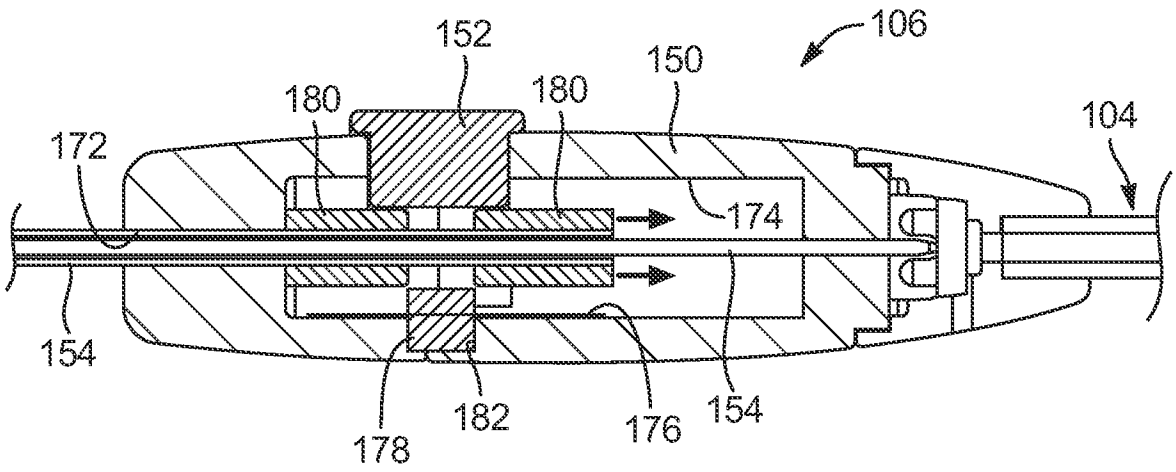

FIG. 13B

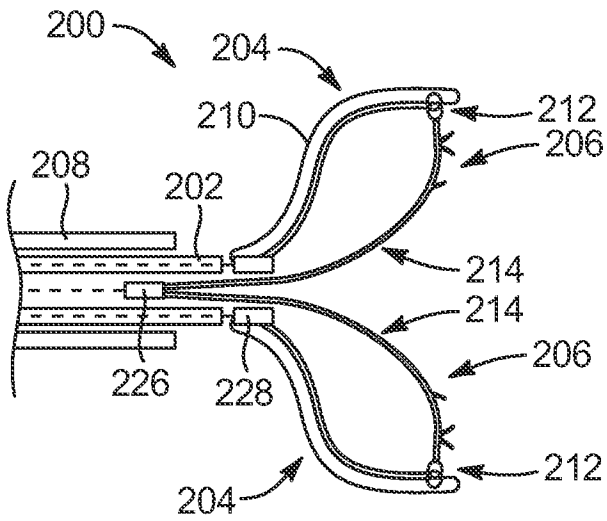

FIG. 14A

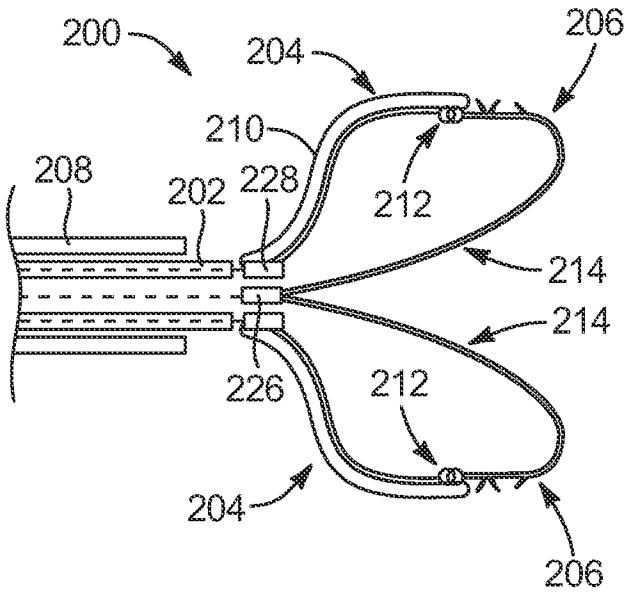

FIG. 14B

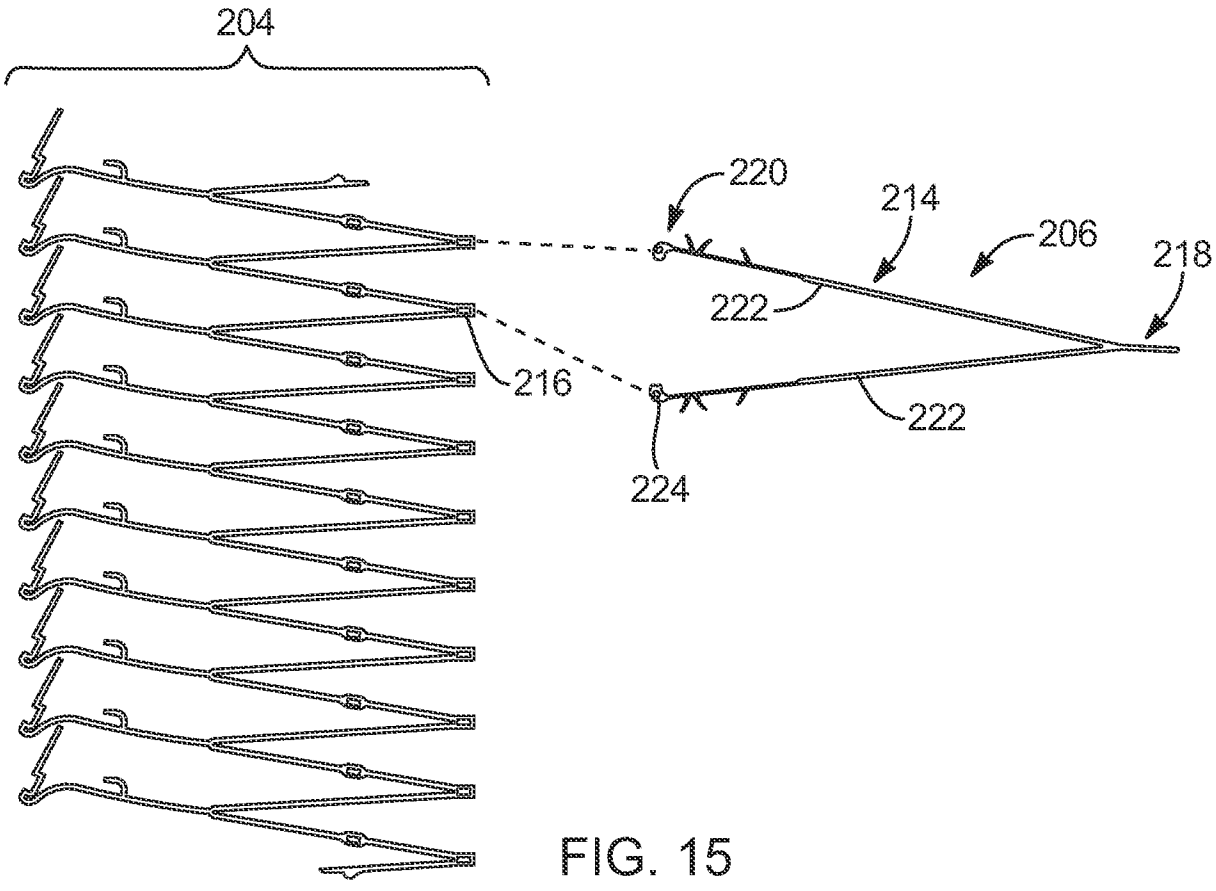

FIG. 15

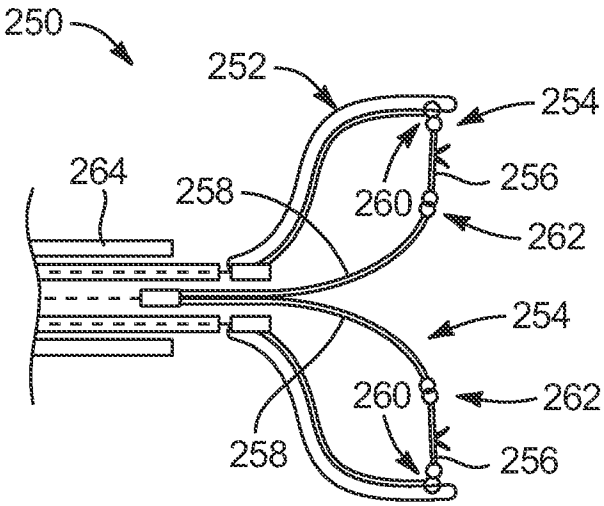

FIG. 16A

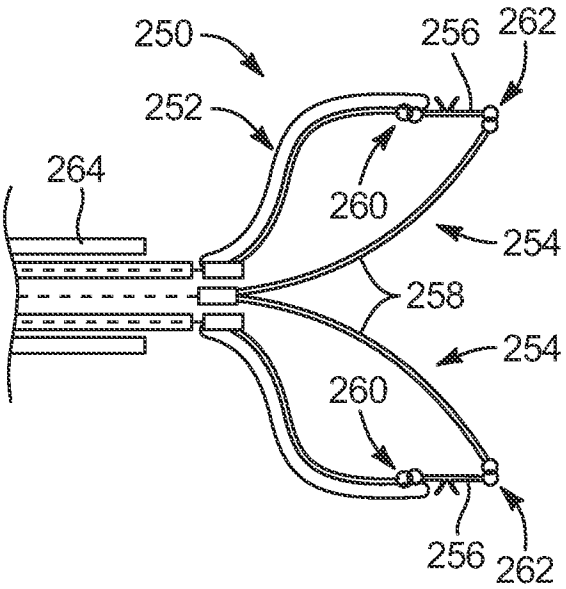

FIG. 16B

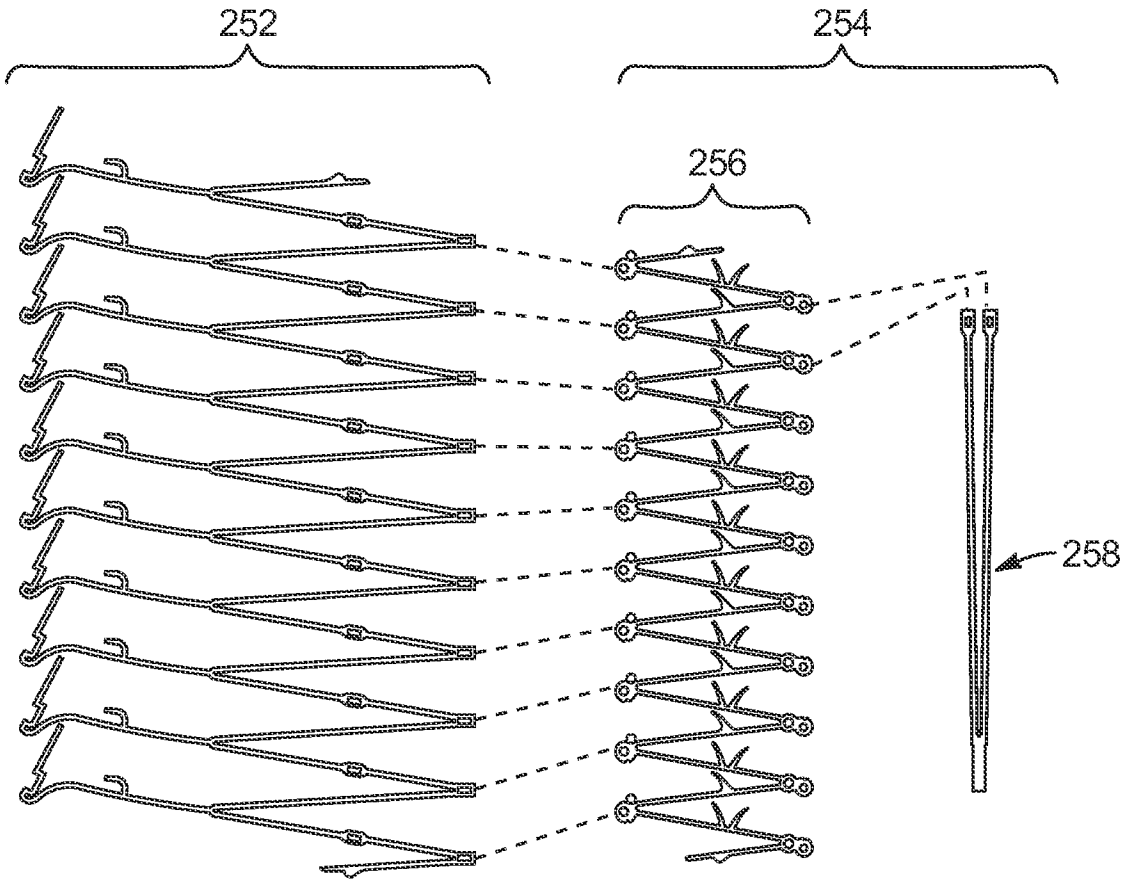

FIG. 17

INTERNATIONAL SEARCH REPORT

International application No
PCT/US2012/063074

A. CLASSIFICATION OF SUBJECT MATTER
INV. A61B17/12
ADD.

According to International Patent Classification (IPC) or to both national classification and IPC

B. FIELDS SEARCHED

Minimum documentation searched (classification system followed by classification symbols)
A61B

Documentation searched other than minimum documentation to the extent that such documents are included in the fields searched

Electronic data base consulted during the international search (name of data base and, where practicable, search terms used)
EPO-Internal

C. DOCUMENTS CONSIDERED TO BE RELEVANT

Category*	Citation of document, with indication, where appropriate, of the relevant passages	Relevant to claim No.
X Y	WO 2010/148246 A2 (COHEREX MEDICAL, INC.) 23 December 2010 (2010-12-23) column 27, line 32 - column 28, line 27; figures 98-100	1,2,4, 9-14 3,6-8, 15,16
X	US 6 652 556 B1 (VANTASSEL ET AL.) 25 November 2003 (2003-11-25) paragraphs [0228] - [0232]; figures 45-47	1,2,4,5, 9-13
X	WO 2010/081033 A1 (COHEREX MEDICAL, INC.) 15 July 2010 (2010-07-15) paragraphs [0044] - [0070]; figures 5-19	1,2,4,5, 9-13
X Y	US 2011/054515 A1 (BRIDGEMAN ET AL.) 3 March 2011 (2011-03-03) the whole document	14,17-20 3,6-8, 15,16

-/--

[X] Further documents are listed in the continuation of Box C.

[X] See patent family annex.

* Special categories of cited documents :

"A" document defining the general state of the art which is not considered to be of particular relevance

"E" earlier application or patent but published on or after the international filing date

"L" document which may throw doubts on priority claim(s) or which is cited to establish the publication date of another citation or other special reason (as specified)

"O" document referring to an oral disclosure, use, exhibition or other means

"P" document published prior to the international filing date but later than the priority date claimed

"T" later document published after the international filing date or priority date and not in conflict with the application but cited to understand the principle or theory underlying the invention

"X" document of particular relevance; the claimed invention cannot be considered novel or cannot be considered to involve an inventive step when the document is taken alone

"Y" document of particular relevance; the claimed invention cannot be considered to involve an inventive step when the document is combined with one or more other such documents, such combination being obvious to a person skilled in the art

"&" document member of the same patent family

Date of the actual completion of the international search	Date of mailing of the international search report
28 January 2013	07/02/2013

Name and mailing address of the ISA/	Authorized officer
European Patent Office, P.B. 5818 Patentlaan 2 NL - 2280 HV Rijswijk Tel. (+31-70) 340-2040, Fax: (+31-70) 340-3016	Giménez Burgos, R

1

Form PCT/ISA/210 (second sheet) (April 2005)

INTERNATIONAL SEARCH REPORT

International application No.
PCT/US2012/063074

Box No. II Observations where certain claims were found unsearchable (Continuation of item 2 of first sheet)

This international search report has not been established in respect of certain claims under Article 17(2)(a) for the following reasons:

1. [X] Claims Nos.: 21-26
because they relate to subject matter not required to be searched by this Authority, namely:

Rule 39.1(iv) PCT - Method for treatment of the human or animal body by surgery

2. [ ] Claims Nos.:
because they relate to parts of the international application that do not comply with the prescribed requirements to such an extent that no meaningful international search can be carried out, specifically:

3. [ ] Claims Nos.:
because they are dependent claims and are not drafted in accordance with the second and third sentences of Rule 6.4(a).

Box No. III Observations where unity of invention is lacking (Continuation of item 3 of first sheet)

This International Searching Authority found multiple inventions in this international application, as follows:

1. [ ] As all required additional search fees were timely paid by the applicant, this international search report covers all searchable claims.

2. [ ] As all searchable claims could be searched without effort justifying an additional fees, this Authority did not invite payment of additional fees.

3. [ ] As only some of the required additional search fees were timely paid by the applicant, this international search report covers only those claims for which fees were paid, specifically claims Nos.:

4. [ ] No required additional search fees were timely paid by the applicant. Consequently, this international search report is restricted to the invention first mentioned in the claims; it is covered by claims Nos.:

Remark on Protest

[ ] The additional search fees were accompanied by the applicant's protest and, where applicable, the payment of a protest fee.

[ ] The additional search fees were accompanied by the applicant's protest but the applicable protest fee was not paid within the time limit specified in the invitation.

[ ] No protest accompanied the payment of additional search fees.

INTERNATIONAL SEARCH REPORT

International application No
PCT/US2012/063074

C(Continuation). DOCUMENTS CONSIDERED TO BE RELEVANT

Category*	Citation of document, with indication, where appropriate, of the relevant passages	Relevant to claim No.
A	WO 02/071977 A2 (ATRITECH, INC.) 19 September 2002 (2002-09-19) abstract; figures 5-7 -----	1,14

1

Form PCT/ISA/210 (continuation of second sheet) (April 2005)

INTERNATIONAL SEARCH REPORT

Information on patent family members

International application No
PCT/US2012/063074

Patent document cited in search report	Publication date	Patent family member(s)	Publication date
WO 2010148246 A2	23-12-2010	AU 2010262859 A1	02-02-2012
		CA 2765682 A1	23-12-2010
		CN 102612345 A	25-07-2012
		EP 2442728 A1	25-04-2012
		JP 2012530551 A	06-12-2012
		US 2010324585 A1	23-12-2010
		US 2010324586 A1	23-12-2010
		US 2010324587 A1	23-12-2010
		US 2010324588 A1	23-12-2010
		WO 2010148246 A2	23-12-2010
US 6652556 B1	25-11-2003	US 6652556 B1	25-11-2003
		US 2004127935 A1	01-07-2004
WO 2010081033 A1	15-07-2010	US 2010228279 A1	09-09-2010
		US 2010228285 A1	09-09-2010
		US 2011022079 A1	27-01-2011
		WO 2010081033 A1	15-07-2010
		WO 2010081039 A1	15-07-2010
		WO 2010081041 A1	15-07-2010
US 2011054515 A1	03-03-2011	NONE	
WO 02071977 A2	19-09-2002	CA 2441119 A1	19-09-2002
		CN 1529571 A	15-09-2004
		EP 1365702 A2	03-12-2003
		JP 2005508201 A	31-03-2005
		US 2003057156 A1	27-03-2003
		WO 02071977 A2	19-09-2002