Aug. 26, 1924. 1,505,963

C. E. LOMAX

AUTOMATIC TELEPHONE SYSTEM

Filed Sept. 13, 1920 2 Sheets-Sheet 1

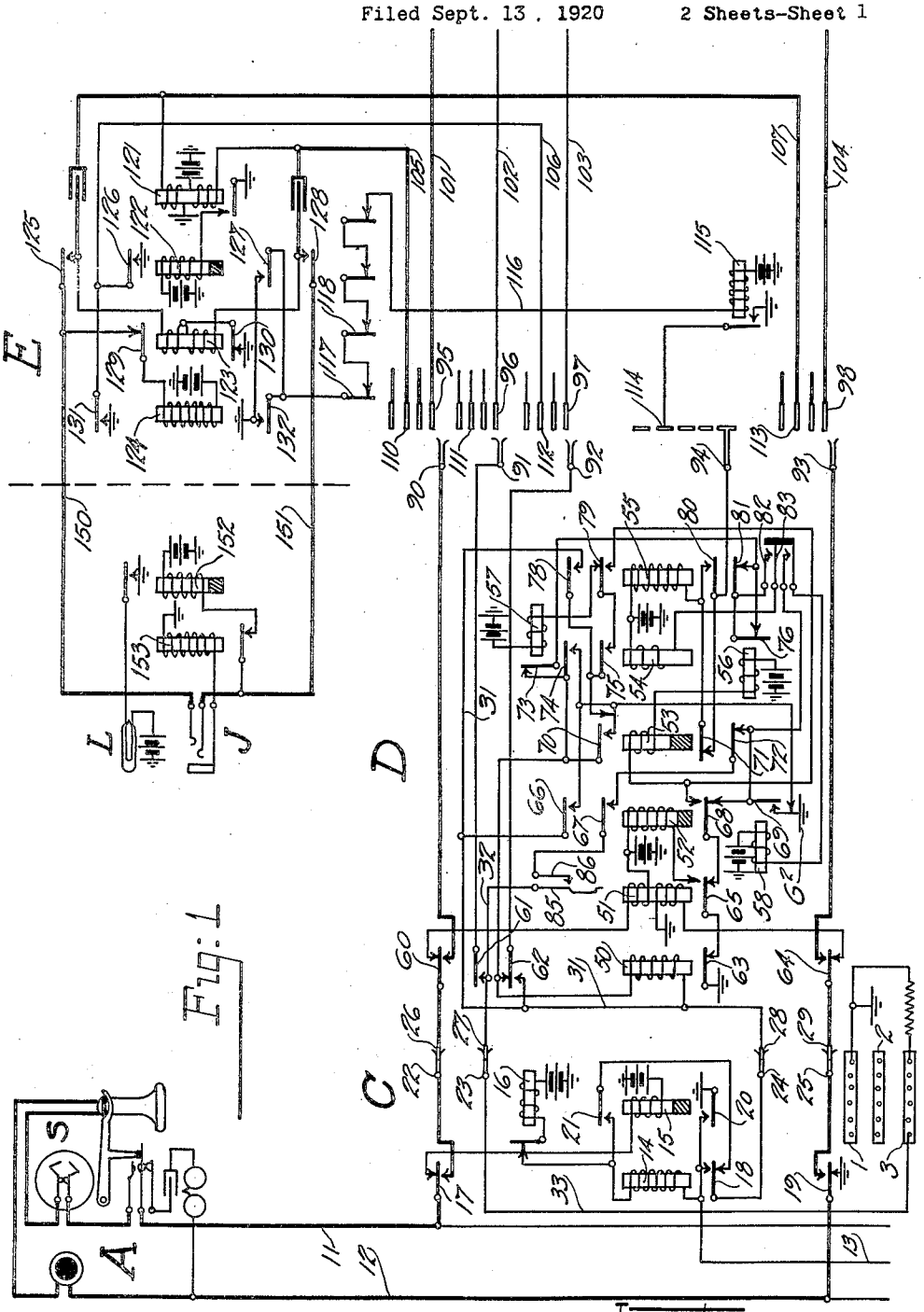

Fig: 1

Inventor
Clarence E. Lomax
Chas. M. Candy
Atty.

Aug. 26, 1924. 1,505,963

C. E. LOMAX

AUTOMATIC TELEPHONE SYSTEM

Filed Sept. 13, 1920 2 Sheets-Sheet 2

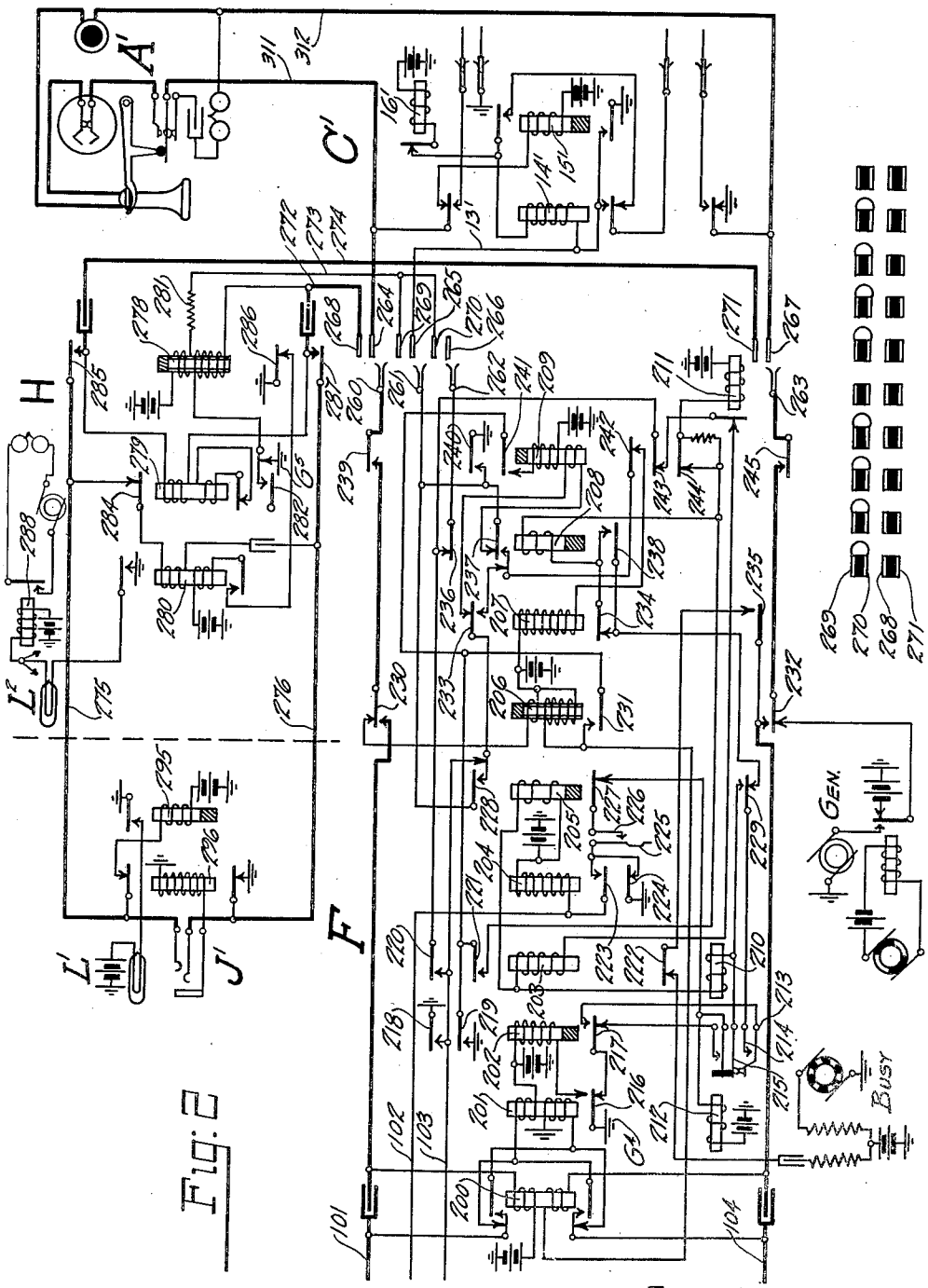

Fig. 2

Inventor
Clarence E. Lomax
Chas. M. Candy
Atty.

Patented Aug. 26, 1924. 1,505,963

UNITED STATES PATENT OFFICE.

CLARENCE E. LOMAX, OF CHICAGO, ILLINOIS, ASSIGNOR TO AUTOMATIC ELECTRIC COMPANY, OF CHICAGO, ILLINOIS, A CORPORATION OF ILLINOIS.

AUTOMATIC TELEPHONE SYSTEM.

Application filed September 13, 1920. Serial No. 409,932.

To all whom it may concern:

Be it known that I, CLARENCE E. LOMAX, a citizen of the United States of America, and a resident of Chicago, Cook County, and State of Illinois, have invented certain new and useful Improvements in Automatic Telephone Systems, of which the following is a specification.

My invention relates in general to automatic telephone systems, but more especially to automatic systems of relatively small size intended for use in factories, department stores, mercantile establishments, and the like, and commonly known as private automatic exchanges.

The principal object of the invention is to provide in a system of the above character a new and improved means for restricting the service whereby the subscribers are divided into three classes in accordance with the different kinds of service which they are to be given. Other objects relate to the provision of novel trunk circuits for giving special service between a private automatic exchange of the above character and the different offices in a multi-office manual telephone system, and to the provision of various other circuit improvements, all of which will be explained hereinafter, with reference to the accompanying drawings.

Referring to the drawings, comprising Figs. 1 and 2, I have shown therein by means of the usual circuit diagrams the essential features of a private automatic exchange embodying the principles of my invention.

In order to facilitate the explanation it will be assumed that the private automatic exchange illustrated is used to give telephone service to the officials and employees in the various departments of an operating telephone company. That is, the system is used solely for local calls within the company's establishment, and is not in any sense of the word a public exchange. It will be assumed furthermore, that the telephone company in question is operating a large public exchange of the manual multi-office type.

With this understanding the apparatus shown in the drawings may be briefly described as follows:

The substation A, Fig. 1, is an automatic substation of the usual type having the usual talking instrumentalities and a calling device S for controlling the central office switches

At the private branch exchange switchboard the line conductors 11 and 12 terminate in the individual line or trunk selecting switch C. The line switch C is a rotary line switch of the usual type, whose wipers have no normal position and move in a forward direction only, and is operable responsive to the removal of the receiver at the substation A to extend the associated line into connection with a trunk line extending to an idle first selector switch.

One of the trunk lines which is accessible to the line switch C and other similar line switches is shown in the drawing as extending to the first selector D. The selector D is of the well known Strowger vertical and rotary type and when taken for use is adapted to respond to the first digit in the called number to select a desired one of the several main groups into which the exchange is divided. For this purpose the bank contacts of the selector are arranged in a plurality of levels in the well known manner and each level may correspond to a different group. It will be assumed herein that the local lines in the private automatic exchange under discussion are divided into two groups. The first and second levels of the selector D and associated selectors are reserved for these two groups of local lines, and trunk lines extend from the contact sets in the two levels to two groups of connector switches in the customary manner. There are also trunk lines extending to the nearest manual office which are used for outgoing calls from the private branch exchange to the public exchange and the third and fourth selector levels are reserved for these trunk lines. By a special arrangement which will be described the trunk lines in the above levels are combined into one group. One of the outgoing trunk lines comprises conductors 105–107, inclusive, which extend from a contact set in the third level to the repeater E, whence the trunk conductors 150 and 151 continue to the manual exchange where they terminate in jack J.

One of the local trunk lines, comprising conductors 101–104, inclusive, is shown in the drawing as extending from the first level of the selector D to the connector F, Fig. 2. The connector F is also a Strowger vertical and rotary switch of well known mechanical construction and has a capacity of 100 lines. In view of the fact that it is desired to use

certain contact sets in the connector banks for groups of special trunk lines which will be described shortly, the connector F is provided with means for giving rotary service if desired. Any two or more consecutive sets of bank contacts may be combined into one group in the well known manner and the first idle contact set in such group may be reached by calling the number assigned to the first contact set in the group. The manner in which the groups are formed will be explained fully hereinafter. The special trunk lines referred to are provided principally for the use of certain clerks in the commercial department of the telephone company who have occasion to call the chief operators and other employees in the manual offices. These trunk lines also take care of certain traffic requirements as will be explained hereinafter. Assuming that there are four manual offices there may be a group of five trunks extending to each office. As shown herein the second level of the group of connectors which includes the connector F is reserved for the trunk lines extending to two of the offices and a certain level in the other group of connectors is used for the trunk lines extending to the other two. One of the trunk lines accessible to the connector F comprises conductors 272–274, inclusive, and extends to the repeater H, whence conductors 275 and 276 extend to one of the manual offices and there terminate in the jack J′.

Having described the general layout of the system, the restricted service arrangements therein and the reasons therefor may now be briefly explained. As before stated, the subscribers are divided into three classes. The subscribers in the first class, comprising a majority of all those who have telephones, are given local service only. That is, their calls are restricted entirely to the private automatic exchange. The subscribers in the second class can establish local connections and also have access to the outgoing trunk lines extending to the manual public exchange, but are denied access to the special trunk lines which extend to the several different offices. The second class will ordinarily comprise the different department heads and other employees whose importance in the company is sufficient to entitle them to outgoing service. The subscribers in the third class have no restrictions in their service whatever, and can establish all connections previously referred to as well as connections to the special trunks extending to the several manual offices. The third class of subscribers includes the higher officials of the company and also a group of employees in the commercial department who have occasion to use the special trunks in transacting routine business with the manual offices. The above is merely a typical arrangement and can of course be varied to suit special circumstances. In order to differentiate between the different classes of subscribers automatically each individual line switch is provided with an extra wiper and bank of contacts, and the trunk lines extending to the first selectors are each provided with an extra conductor. This arrangement is clearly shown in the drawing, Fig. 1, in which the line switch C is shown as having an extra wiper 23 which has access to the fourth conductors extending to a plurality of first selectors, one of which conductors is the conductor 32. When used in connection with the restricted service system this conductor is commonly referred to as a discriminating trunk. The class of service given any subscriber is determined by the manner in which the extra wiper of his individual line switch is connected. Three bus-bars are provided at the line switchboard which may be numbered 1, 2, and 3, as shown in the drawing. Bus-bar No. 1 is permanently connected to ground, bus-bar No. 3 is connected to ground through a resistance of about 500 ohms, while bus-bar No. 2 has no ground connections at all. The extra wipers of the several line switches are connected to these three bus-bars in accordance with the class of service to be given to the respective subscribers. For example, the extra wiper of line switch C is connected to bus-bar No. 3, from which it may be inferred that the subscriber at substation A belongs to the third class and is given unrestricted service, as will presently be explained in detail.

The operation of the circuits will now be explained more in detail and for this purpose the process of setting up a few typical connections will be described. It will first be assumed that a local connection is to be established between substation A as the calling station, and substation A′ as the called station.

When the receiver is removed at substation A a circuit is completed over the line conductors 11 and 12 for the line relay 15. Upon energizing, relay 15 closes at its armature 20 a circuit which extends through the winding of the switching relay 14 and the winding of the stepping magnet 16 in series, and at its armature 21 connects the test wiper 24 to the above circuit at a point midway between the said relay and magnet. The operation now depends upon whether the trunk line with which the line switch wipers are associated is busy or is not busy. If this trunk line is busy there will be a ground potential upon test contact 28 and the rotary magnet 16, being supplied with direct ground via the test wiper 24, will operate in the manner of a buzzer to advance the switch wipers step by step in search of an idle trunk line. It may be assumed, how-

ever, that when the call is initiated the trunk line shown in the drawing is idle. Under these circumstances when the line relay 15 is energized no trunk selecting movement will take place, the switching relay 14 will energize immediately and the stepping magnet will remain inoperative due to the high resistance of the said switching relay. Upon energizing, the switching relay 14 disconnects the line conductors 11 and 12 forming the windings of the line relay 15 and from ground, respectively, and extends them by way of armatures 17 and 19, wipers 22 and 25, bank contacts 26 and 29, and armatures 60 and 64 and their resting contacts to the windings of the double wound line relay 51 of the selector D.

When the calling line is extended to the selector D in the manner above described the line relay 51 is energized over the line circuit and closes a circuit for the slow acting release relay 52. Upon energizing, relay 52 prepares a circuit for the vertical magnet 56 at armature 68 and at armature 66 connects ground to the release trunk conductor 31 thereby completing a holding circuit for the line switch C which extends by way of the said conductor, test contact 28, test wiper 24, armature 18 and its working contact, winding of the switching relay 14, and the winding of the stepping magnet 16 to battery. The above circuit is established before the slow acting line relay 15 has had time to fall back and serves to maintain the switching relay 14 energized throughout the connection. Ground potential is also extended by way of the private normal conductor 13 to multiple test contacts in the banks of the connector switches which have access to the line of substation A whereby the said line is made busy.

The calling subscriber may now operate his calling device in accordance with the first digit in the desired number which in the present case is the digit 1. When the calling device is operated the line circuit is interrupted once momentarily and in response thereto the line relay 51 is momentarily deenergized. As a result an impulse of current is transmitted through the slow acting series relay 53 and the vertical magnet 56 in series, whereby the vertical magnet 56 is operated to raise the wipers 90–93, inclusive, until they stand opposite the first level. The slow acting relay 53 is energized in series with the vertical magnet 56 and at the first upward movement of the shaft closes a circuit for the stepping relay 54 as follows: ground at G^2, normally closed contact springs controlled by armature 69, working contact of armature 70 and the said armature interrupter contact 73 of the rotary magnet 57, resting contact of armature 81 and the said armature, off normal springs 82 and 83, and the winding of relay 54 to battery. Upon energizing, relay 54 establishes a locking circuit for itself at its armature 74, and at its armature 75 prepares a circuit for the rotary magnet 57. At the end of the vertical movement of the switch the slow acting relay 53 is deenergized and since relay 54 remains locked up a circuit for the rotary magnet 57 is completed in an obvious manner. The rotary magnet is therefore energized to advance the switch wipers 90–93, inclusive, into engagement with the first set of bank contacts in the level opposite which they have been brought to rest. At the same time the rotary magnet opens its interrupter contact 73, thereby breaking the locking circuit of the stepping relay 54 which accordingly deenergizes and breaks the circuit of the rotary magnet, which then deenergizes also and again closes its interrupter contact. The operation now depends upon whether the first trunk line in the first level is busy or is not busy. If this trunk line is busy the test contact engaged by the test wiper 92 will have a ground potential upon it and a circuit will be established for energizing relay 54 again, the said circuit being traceable from the grounded test contact, by way of test wiper 92, armature 62 and its resting contact, interrupter contact 73 of the rotary magnet, resting contact of armature 81 and the said armature, off normal springs 82 and 83, and the winding of the stepping relay 54 to battery. Relay 54 is accordingly again energized and the operations just described are repeated. Assuming that the trunk line shown in the drawing and comprising conductors 101–104, inclusive, is the first idle trunk line, when the wipers of the switch arrive at back contacts 95–98, inclusive, the test wiper 92 will find no ground on test contact 97 and the stepping relay 54 will not again be energized. The rotation of the switch will therefore cease, and the switching relay 50, which has heretofore remained short circuited, will energize over a circuit which extends from the grounded release trunk conductor 31 by way of the winding of the said switching relay, interrupter contact 73, of the rotary magnet, resting contact of armature 81 and the said armature, off normal springs 82 and 83, and the winding of the stepping relay 54 to battery. Due to the high resistance of relay 50, relay 54 is not operated at this time. Upon energizing, relay 50 disconnects ground from the line relay armature 65 in an obvious manner, connects the release trunk conductor 31 to the test wiper 92 at armature 62, connects the discriminating trunk conductor 32 to wiper 91 at armature 61, and by means of armatures 60 and 64 disconnects the two conductors of the incoming line from the windings of the line relay 51 and extends them by way of wipers

90 and 93, bank contacts 95 and 98, conductors 101 and 104, and normally closed contact springs of the back bridge relay 200 to the double wound line relay 201 of the connector F, Fig. 2.

The calling line having been extended to the connector F, line relay 201 is energized over the line circuit in the usual manner and completes a circuit for the slow acting release relay 202. Upon energizing, the latter relay prepares a circuit for the vertical magnet 210 at armature 217 and at armature 218 connects ground to the release trunk conductor 103. By the latter operation a holding circuit is completed extending back to the selector D by way of the said conductor 103, test contact 97, test wiper 92, and armature 62 and its working contact to the release trunk conductor 31 where it joins the previously described holding circuit extending back to the line switch C. The circuit over conductor 103 serves to maintain switches C and D in operated position throughout the connection.

The subscriber at substation A may now call the second digit in the desired number which is also the digit 1. By the resulting interruption in the line circuit the line relay 201 is deenergized momentarily and transmits an impulse of current to the vertical magnet 210 over the following path: ground at G^4, armature 216 and its resting contact, armature 217 and its working contact, off normal springs 213 and 215, winding of the vertical magnet 210, and the winding of the slow acting relay 205 to battery. By the operation of the vertical magnet 210 the wipers 260–263, inclusive, are raised one step until they stand opposite the first level. The slow acting relay 205 is energized in series with the vertical magnet and by means of the armature 229 maintains the circuit thereof intact notwithstanding the fact that the circuit is altered by the shifting of the off normal springs at the first upward movement of the switch shaft. At the end of the vertical movement relay 205 deenergizes and transfers the operating circuit to the rotary magnet 211.

The calling subscriber may now operate his calling device in accordance with the third and final digit in the called number which we will assume to be the digit 5. Five interruptions are accordingly produced in the line circuit to which the line relay 201 responds as before and transmits a series of five impulses to the rotary magnet 211 over the following circuit: ground at G^4, armature 216 and its resting contact, armature 217 and its working contact, off normal springs 213 and 214, armature 229 and its resting contact, resting contact of armature 234 and the said armature, winding of the slow acting series relay 208, resting contact of armature 244 and the said armature, and the winding of the rotary magnet 211 to battery. By the operation of the rotary magnet 211 the switch wipers 260—263 are rotated step by step and are finally brought to rest in engagement with the contact set associated with the line of substation A′, this contact set being the set shown in the drawing and comprising bank contacts 264–267, inclusive. The slow acting series relay 208 is energized in series with the rotary magnet and during the rotation of the switch connects the test wiper 261 with the test relay 207 at its armature 237. At the same time relay 208 places a shunt around the break contact at armature 234 of the test relay by means of its armature 238 in order to guard against the possibility of the said test relay being energized during the rotation to break the circuit of the rotary magnet.

It will be assumed first that the line of substation A′ is busy when connected with as above described. Under these circumstances the test contact 265 will have a ground potential upon it and when the test wiper 261 engages this test contact, the test relay 207 will be energized. The rotation of the switch having ceased, the slow acting relay 208 will now fall back and a locking circuit is closed for the test relay 207 which includes its armature 233 and normally closed contacts controlled by armature 237 of relay 208. The test relay 207 also breaks the rotary magnet circuit at its armature 234, and at its armature 235 connects a lead from the busy signalling machine to the lower heavy line conductor, thereby transmitting an audible busy signal to the calling subscriber. Being thus advised that the desired line is for the time being inaccessible, the calling subscriber will hang up his receiver.

Having explained the operations which take place when the called line is busy, it will now be assumed that the line is idle when called. Under these circumstances, when connection to the line is completed the test wiper 261 will find no ground potential upon the test contact 265 and the test relay 207 will not be energized. Then, when the slow acting relay 208 falls back an instant later, a circuit is completed for the switching relay 209 as follows: From the grounded release trunk conductor 103, by way of normally closed contact springs controlled by armature 228, armature 233 and its resting contact, lower winding of relay 209, resting contact of armature 237, wiper 261, test contact 265, conductor 13′, winding of switching relay 14′, and the winding of the stepping magnet 16′ to battery. Upon the closure of the above circuit relays 209 and 14′ are energized in series and the latter relay operates to clear the line of substation A′ of its normal battery and ground connec-

tions in the line switch C'. It is noted that due to a mechanical interlocking device controlled by relay 15', which has not been energized, the switching relay 14' is operated only about half way and the wipers of the line switch C' are not connected.

In the connector F, when the switching relay 209 is energized it closes a locking circuit for itself at its armature 241, grounds the test wiper 261 at its armature 240, opens the circuit of the test relay 207 at armature 242, breaks the circuit of the stepping relay 203 (to be described later) at its armature 243, breaks the rotary magnet circuit at its armature 244, and at armatures 239 and 245 connects up the upper and lower line wipers 260 and 263. The connection having been completed ringing current from the generator Gen. is projected intermittently out over the line conductors 311 and 312 to the called substation A' in order to operate the bridged ringer thereat to signal the called subscriber. It will be observed that the return path for the ringing current includes the upper winding of the ring cut off relay 206, and when the called subscriber responds by removing his receiver the said ring cut off relay will be operated in the usual manner. Upon energizing, relay 206 locks itself at its armature 231, and at its armatures 230 and 232 opens the ringing circuit and finally completes the talking circuit.

The calling and called subscribers are now connected and may converse as desired. Talking battery is supplied to the transmitter at substation A through the windings of the line relay 201, while talking battery is supplied to the transmitter at substation A' through the windings of the double wound back bridge relay 200. The latter relay is energized as long as the receiver remains off the hook at the called station and in accordance with the usual practice reverses the direction of current flow in the calling line. Although this reversal of current performs no useful purpose in the present disclosure it is a standard arrangement used frequently in the control of measured service apparatus and supervisory equipment and on that ground has been included.

When the conversation is finished both subscribers will replace their receivers. When the receiver is replaced at substation A the line and release relays 201 and 202 of the connector F are deenergized and a circuit is thereby closed for release magnet 212 which operates to restore the connector F to normal position in the usual manner. Relay 202 also disconnects ground from the release trunk conductor 103 and thereby breaks the holding circuit extending back to the selector D and the line switch C. The switching relay 50 in the selector D is accordingly deenergized and closes a circuit for the release magnet 58, which operates to restore the switch D to normal position. At the same time the switching relay 14 in the line switch C is deenergized and the said line switch is thus restored to normal also.

Having described the general operation of the switches in the process of setting up a local connection I will now describe certain other connections, the next to be considered being an outgoing call from the private automatic exchange to the public exchange. As hereinbefore stated, the trunk lines extending to the public exchange which are to be used for ordinary outgoing service are accessible from the third and fourth levels of the selector switches, and these trunk lines are all in one group. The digit to be called therefore in order to obtain an outgoing connection to the public exchange is the digit 3. Assuming that the calling subscriber is the subscriber at substation A, as in the previous case, when the receiver is removed the line switch C is operated as before to extend the calling line to an idle trunk line. Assuming that the trunk line extending to the selector D is taken for use again, when the connection thereto is completed the line and release relays 51 and 52 are energized, the selector is prepared for operation in its vertical movement, and a holding circuit is established for the line switch C, all as previously explained. The calling subscriber will now operate his calling device in accordance with the digit 3, and as a result, the vertical magnet 56 is operated under control of the line relay 51 to raise the wipers 90—93, inclusive, until they stand opposite the third level. The stepping relay 54 is locked up by the operation of the slow acting relay 53 when the vertical movement starts, and at the end of the vertical operation the latter relay falls back to start the automatic trunk selecting movement in order to locate an idle trunk line in the third level. Assuming that the trunk line shown in the drawing and comprising conductors 105, 106, and 107, is the first idle trunk line, when the switch wipers arrive at the bank contacts 110—113, inclusive, the rotation of the switch will stop and the switching relay 50 is energized to extend the conductors of the calling line by way of wipers 90 and 93, bank contacts 110 and 113, and conductors 105 and 107 to the windings of the double wound line relay 121 of the repeater E.

When the calling line is extended as above explained the line relay 121 is energized over the line circuit and closes a circuit for the slow acting release relay 122. Upon energizing, the latter relay closes a holding circuit at its armature 126 which extends by way of conductor 106, test contact 112, test wiper 92, and armature 62 and its working contact to conductor 31 where the circuit joins the holding circuit ex-

tending back to the line switch C. This holding circuit is of course similar to the one established when connection was extended to the connector F as previously described. Returning to the repeater E, when the release relay 122 is energized it closes a chain contact at its armature 127 (the purpose of the chain contacts will be described shortly), and completes the connection through to the trunk conductors 150 and 151 by means of its armatures 125 and 128. As soon as the latter connection is completed the double wound relay 123 will be bridged across the trunk line on the outgoing side of the repeater and a circuit is thereby closed for the line relay 152 at the manual office. The line equipment at the manual office consists of the usual answering jack and lamp with the associated line and cut off relays. The line relay, however, should be of high resistance, preferably about 12,000 ohms, in order to prevent the relay 123 from being operated. Relay 123 is normally grounded at its middle point and it follows that the line relay 152 will be energized to light the answering lamp L to advise the operator that a call has been received. When the operator answers, the cut off relay 153 is energized, the line relay 152 is disconnected and the lamp L is extinguished in the usual manner. Relay 123 is now energized by current from the cord circuit battery over the lower trunk conductor 151 and disconnects relay 124 at armature 129. Ground is also disconnected from the middle point of relay 123 by the operation of armature 130, and the relay remains held up over the two sides of the trunk line in series. The operator will now complete the connection to the desired subscriber in the public manual exchange in any suitable manner. Since these operations are old and well understood no further explanation thereof need be given.

When the conversation is ended and the subscribers hang up their receivers the connection is released automatically so far as the apparatus in the private automatic exchange is concerned the same as was described in the case of a local connection. In view of certain operations which take place at the repeater E, however, it may be well to explain this a little. When the receiver is replaced at substation A the line and release relays 121 and 122 are deenergized and the latter breaks the holding circuit extending back to the selector D in order to restore the said selector and the line switch C to normal. At the same time relay 122 disconnects the double wound relay 123 from in bridge of the trunk conductors 150 and 151. By this operation the operator at the manual office is given a disconnect signal in the usual manner and relay 124 is connected to the upper trunk conductor 150. Relay 124 is now energized by ground from the cord circuit and will remain energized as long as the plug remains in the jack. At its armature 131 relay 124 again grounds the release trunk conductor 106 in order to make the trunk line busy. When the operator pulls down the connection in response to the disconnect signal ground is disconnected from the upper trunk conductor 150, relay 124 is deenergized and the trunk is cleared and made accessible to other calls.

As stated hereinbefore, both the third and fourth levels are used for trunk lines to the public exchange and it will now be explained how access is had to the trunks in the fourth level in case all the trunk lines in the third level are busy. Although not mentioned before it will be understood that in order to accomplish this the selector D is provided with a vertical test wiper which is indicated in the drawing by the reference character 94 and which is adapted to test over a strip of vertical test contacts during the vertical operation of the switch. In the present disclosure, however, only one of these test contacts, which is the third level test contact 114, is in use. When all the trunk lines in the third level are busy conductor 116 is grounded by way of chain contacts in the repeaters as will be readily seen. The contact at armature 127 in the repeater E is one of these chain contacts and the contacts at armatures 117, 118, etc., are similar contacts in the other repeaters of the group. Although not shown herein, each of the other repeaters has a contact similar to 132 which is adapted to shunt its contact such as 117. Thus, when all of the trunk lines in the third level are busy chain contacts in all the repeaters will be closed, conductor 116 will be grounded and relay 115 will be energized to connect ground to the vertical test contact 114. With this explanation the operation of the switch in raising its wipers to the fourth level may be briefly explained. Assuming the same conditions as in the previous case, in which the wipers of the switch were raised to the third level by calling the digit 3, the stepping relay 54 having been energized at the start of the vertical movement, when the slow acting relay 53 falls back at the end of the vertical movement this relay ordinarily closes a circuit for the rotary magnet 57 by the retraction of its upper armature 70. In the present case, however, just before this circuit is closed armature 71 engages its resting contact, and completes a circuit which extends from the grounded vertical test contact 114 by way of the vertical test wiper 94, resting contact of armature 71 and the said armature, and the winding of relay 55 to battery. Upon energizing, relay 55 connects the release trunk con-

ductor 31 to armature 75 of the stepping relay 54 in order to maintain the said armature grounded after relay 53 has again energized, closes a locking circuit for itself at its armature 80, disconnects a shunt from around the vertical magnet interrupter contact 76 by means of its armature 81, and at its armature 79 transfers the operating circuit from the rotary magnet 57 to the vertical magnet 56. The vertical magnet is accordingly energized over the following circuit: from the grounded release trunk conductor 31, by way of the working contact of armature 78 and the said armature, armature 75 and its working contact, armature 79 and its working contact, winding of the slow acting relay 53, and the winding of the vertical magnet 56 to battery. By the operation of the vertical magnet the switch wipers are raised one step until they stand opposite the fourth level. In operating, the vertical magnet opens its interrupter contact 76 and thereby breaks the locking circuit of the stepping relay 54 which accordingly deenergizes and at its armature 75 breaks the circuit of the vertical magnet which thereupon deenergizes also and again closes its interrupter contact. The switch is thus adapted for further vertical operation in case there is one or more levels in the group in addition to the third and fourth. In the present case, however, since the fourth level is the last level in the group the vertical test contact associated therewith will not be grounded and relay 55 will deenergize as soon as the vertical test wiper leaves the test contact 114. The slow acting relay 53 is energized in series with the vertical magnet 56 and as soon as either the vertical magnet deenergizes to close its interrupter contact or relay 55 falls back to close its contact at armature 81, it is immaterial which occurs first, the said relay 53 again closes an energizing circuit for the stepping relay 54 which accordingly pulls up and locks itself as usual. An instant later the slow acting relay 53 is deenergized and as a result the usual circuit for the rotary magnet 57 is completed in order to initiate the trunk hunting movement on the fourth level. From now on the operations are the same as have already been described. It will be understood of course that as many levels as desired may be combined into one group. When operated in accordance with the digit corresponding to the first level of the group the selector D will automatically hunt vertically until it finds an idle level after which the switch will rotate automatically in the usual manner to select an idle trunk in the selected idle level.

Considering now the restricted service feature, it has been explained before that the subscribers in class 1 are denied access to the outgoing trunks to the public exchange. In order to accomplish this result the selector D is provided with a pair of shaft controlled springs 85 and 86 which are adapted to be closed by the shaft when the same is raised to the third or fourth level. A convenient way of operating these springs is to mount them in such a position that the spring 85 will be actuated by the circular cup spring casing which is attached to the top of the shaft. Assuming now that a call is made to the public exchange, when the wipers of the selector D are raised to the third level the shaft springs 85 and 86 will be closed. Then, when the slow acting relay 53 falls back at the end of the vertical movement a circuit will be completed through the release magnet 58 as follows: from conductor 33, in the line switch C, by way of the extra wiper 23, bank contact 27, discriminating trunk conductor 32, shaft springs 85 and 86, armature 67 and its working contact, armature 72 and its resting contact, the lower pair of off normal springs, and the winding of the release magnet 58 to battery. If the calling subscriber is the subscriber at substation A or any subscriber in the third class the conductor 33, or corresponding conductor, will be connected to the bus-bar No. 3 and ground will be supplied to the discriminating trunk conductor 32 through a 500 ohm resistance. Due to the fact that this resistance is included in the circuit the release magnet 58 will not energize and the call will go through as described. The same is true if the calling subscriber is a subscriber in the second class, for in such case no ground at all will be connected to the discriminating trunk conductor 32. If the calling subscriber is a subscriber in the first class, however, the conductor corresponding to conductor 33 will be connected to direct ground at bus-bar No. 1, and since direct ground is thus supplied to the discriminating trunk conductor 32 the release magnet 58 will be energized when the slow acting relay 53 falls back at the end of the vertical movement of the switch and the switch will be restored to normal position. Thus it will be seen that subscribers in the first class cannot make outgoing calls to the public exchange.

The process of establishing connections over the special trunk lines to the several manual offices will now be considered. As before stated, there are two groups of these trunk lines which terminate in the second level of the group of connectors which includes the connector F, Fig. 2. In order to permit of the selection of idle trunk lines the connector F is adapted to operate as a rotary connector and to this end it is provided with an extra test wiper 262 and associated bank of test contacts. The wiring of the test contacts which is required in order to take care of the grouping of the trunks is shown in the lower right hand corner of Fig. 2, where the wiring of the contacts in

the second level is shown. The upper row of contacts are the ten regular test contacts of the level, the next lower row of contacts are the ten special test contacts provided to take care of the rotary feature, while the two bottom rows are the line contacts. In order to combine a plurality of contact sets into one group all that is necessary is to connect the two test contacts of each contact set except the last, as is shown clearly in the drawing.

We will assume now that some subscriber in the third class wishes a direct connection with one of the offices in the public exchange without having to go through one of the regular outgoing trunks. The calling subscriber may be an employee of the commercial department or other employee who wishes to call either the chief operator or the wire chief at the distant manual office, or he may be an official of the company who wishes a direct connection with a view to obtaining quicker service than would be possible if the call were trunked through in the ordinary manner. At any rate, and regardless of who the calling party is, we may assume that the call is coming from the substation A, which is a class 3 telephone. Access to one of the connectors, the connector F, for example, is obtained in the usual manner by raising the receiver and then calling the digit 1. Since the required group of trunk lines terminates in the second level the next digit to be called is the digit 2. In response to the calling of this digit the vertical magnet 210 is operated under control of the line relay 201 to raise the wipers 260—263, inclusive, to the second level. Assuming now that the required office is the office served by the first group of trunk lines in the second level the next digit to be called will be the digit 1, or the digit corresponding to the first contact set in the group. When the calling device is operated for the final digit 1 then, the rotary magnet 211 is energized once and the wipers are advanced into connection with bank contacts 268—271, inclusive. The slow acting relay 208 is energized in series with the rotary magnet 211 and connects the test wiper 261 to the test relay 207. Assuming that the first trunk line is busy, test contact 269 will have a ground potential upon it and the test relay 207 will be energized, establishing a locking circuit for itself at its armature 233, and opening the rotary magnet circuit at its armature 234. Since the trunk line now connected with is the first trunk line in the group the extra test contact 270 will be connected to test contact 269 as shown, and when the slow acting relay 208 deenergizes a circuit for the stepping relay 203 is completed as follows: from the grounded test contact 270, by way of test wiper 262, armature 236 and its resting contact, armature 243 and its resting contact, interrupter contact of the rotary magnet 211, winding of the stepping relay 203, and the winding of the slow acting relay 205 to battery. As a result of the closure of the above circuit relays 203 and 205 are energized, the latter relay being effective to shift the locking circuit of the test relay 207 from the release trunk conductor 103 to the test wiper 261, by means of its armature 228. Relay 203, upon energizing, establishes a locking circuit for itself at its armature 220 and at its armature 221 closes a circuit for the rotary magnet 211 in an obvious manner. The rotary magnet 211 is accordingly energized and rotates the switch wipers into engagement with the next set of bank contacts. In operating, the rotary magnet 211 opens its interrupter contact and thereby breaks the locking circuit of the stepping relay 203, which accordingly falls back and breaks the rotary magnet circuit, whereupon the rotary magnet deenergizes and again closes its interrupter contact. If the next trunk line is busy the test wiper 262 will still engage a grounded test contact and the stepping relay 203 will again be energized and the operation above described will be repeated, the rotation being thus continued until the switch wipers arrive at an idle trunk line. When this occurs the rotation will cease due to the failure of relay 203 to again pull up, the test relay 207 will deenergize, and the switching relay 209 will be operated.

The foregoing describes the operation when the trunk selecting movement is required. For convenience it will be assumed that when the call is made the first trunk line in the group, or the one shown in the drawing, is idle. Under these circumstances, when the wipers of the switch come into engagement with the bank contacts 268–271, inclusive, the test wiper 261 will find no ground potential and the test relay 207 will not be energized. Then when the slow acting relay 208 deenergizes an instant later a circuit is completed for the switching relay 209 as follows: from the grounded release trunk conductor 103, by way of normally closed contacts controlled by armature 228, armature 233 and its resting contact, lower winding of relay 209, resting contact of armature 237 and the said armature, test wiper 261, test contact 269, conductor 273, resistance 281, and the upper winding of relay 278 to battery. Upon the closure of the above circuit the switching relay 209 of connector F is energized with the usual results, but relay 278 in the repeater H, being marginally adjusted, is not energized due to the inclusion of resistance 281 in the circuit. The line wipers 260 and 263 having been connected up by the energization of the switching relay 209, a circuit is completed for the ring cut off relay 206 of the connector F as follows: ground at G^5, normally

closed contacts controlled by armature 282 of relay 279, lower winding of relay 278, conductor 272, bank contact 268, line wiper 260, armature 239 and its working contact, armature 230 and its resting contact, and the upper winding of relay 206 to battery. By the closure of the above circuit the cut off relay 206 is energized to disconnect the ringing circuit and complete the talking connection in the usual manner. Relay 278 is also energized now, since its two windings assist each other and by means of its armatures 285 and 287 extends the trunk conductors 272 and 274 by way of the condensers to the outgoing trunk conductors 276 and 275, respectively. By this operation the upper winding of relay 279 is bridged across the trunk conductors in order to operate the line relay 295 at the A board in the distant manual office. Relay 279 is energized in series with the line relay 295, but is made somewhat slow to pull up by means of its short circuited lower winding in order to provide plenty of time for the operation of the ring cut off relay 206 in the connector, and in order to permit relay 278 to become fully operated before the circuit through its lower winding is broken. After relay 279 is operated relay 278 is held up by means of its upper winding. Relay 279 also disconnects the ring down relay 280 from across the line. When the A operator perceives the lighted lamp L' she will answer the call by plugging into the jack J' and will then complete the connection to the desired party in the well known manner.

When the connection in the private automatic exchange is released relay 278 will fall back and open the trunk circuit at its armatures 285 and 287. This operation disconnects relay 279 from in bridge of the trunk conductors 275 and 276 and thus gives the operator a disconnect signal in response to which she will pull down the connection. The trunk line is then ready for use in another call.

The special trunks such as the one shown herein are also intended for use in handling special traffic calls from the manual exchange to the offices of the telephone company. This may be explained as follows: There are always a certain number of subscribers whose service has been temporarily discontinued because of their failure to pay their telephone bills or for other proper reasons and the answering jacks of such subscribers are properly marked in order to indicate to the A operators that the associated subscribers are to be denied service. When a call is received from a subscriber of this class the A operator is not permitted to talk to him herself but is required to connect the subscriber with the proper clerk in the commercial department who is able to look up the records and explain to the subscriber why he is not permitted to make a call. The special trunks are used to take care of the traffic to the commercial department under the circumstances described above and for this purpose the answering jacks associated with such trunks at the A board are multipled throughout the board. In addition each trunk line has a lamp signal, lamp L^2 in the case of the trunk line shown in the drawing, and all these lamps are located at a conspicuous place in the commercial department where they may readily be seen by all the record clerks. The lamps associated with each group of trunk lines are of a distinctive color and all the lamps are wired to a pilot relay which is arranged so as to sound an alarm whenever any lamp comes in. Suppose now that one of the A operators in the manual office to which the trunk line shown in the drawing extends, receives a call from a subscriber who is denied service. The operator answers the call by connecting the subscriber with the trunk line shown, through the medium of jack J' or a multiple thereof, and then rings on the trunk. By this operation the ring down relay 280 in the repeater H is energized and establishes a locking circuit for itself at its lower armature. At the same time the lamp L^2 is lighted and the pilot relay 288 actuates the alarm. The record clerks, of whom there may be one for each of the manual offices, on hearing the alarm will all glance up at the bank of lamps to see from which office the call is coming; the clerk who has the records of that office will then answer the call by calling the number of the trunk, the connection being completed through the medium of the connector F or a similar connector in the manner described previously. When the connection is completed the circuit of relay 280 is broken at armature 286 of relay 278 and relay 280 is deenergized to put out the lamp L^2. It would seem at first glance that some confusion would result due to the fact that the connector F is a rotary connector and the trunk line shown is only one of a group of five similar trunk lines any one of which might be used. Such is not the case, however, except under unusual circumstances. Considering any particular group of trunks, the several trunk lines of the group are connected to the jacks at the A board in inverse order and the last trunk therefore is always used for a connection of this kind. The commercial clerk who answers the call will not call the number of the trunk group, but on the contrary will call the number of the last trunk in the group. For example, suppose that a call is received on the trunk whose number is 125, this being the last trunk in the first group in the second level of the group of connectors which includes the connector F. The clerk will answer the call by calling the

number 125, and if another call is received before the clerk has disconnected, it will come in on trunk 124. After hanging up the receiver and disconnecting from trunk number 125 the clerk may now call the number 124 in order to answer the second call. In view of the fact that connections of the class described are handled by skilled employees of the telephone company there is little chance of any trouble or confusion.

The restricted service arrangement at the connector switch may now be explained. As explained hereinbefore there is only one class of subscribers who have access to the special trunks. These are the subscribers in class No. 3, and the subscribers in classes 1 and 2 are denied access to such trunks. In order to take care of this the connector F and associated connectors in the same group are provided with a pair of shaft springs which are closed on the second level, these springs being indicated in the case of connector F by reference characters 225 and 226. Suppose now that it is attempted to extend a connection over one of the special trunks. It may be assumed for convenience that the calling party is at substation A and such being the case the line may be extended by way of the line switch C and the first selector D to the connector F in the manner previously explained. When connection is extended to the connector F the discriminating trunk connector 32 is extended thereto also by means of armature 61 of relay 50, wiper 91, bank contact 96 and discriminating trunk conductor 102, and the winding of the discriminating relay 204 to battery. Since the calling subscriber is a subscriber in class 3 a 500 ohm ground will be placed on the discriminating trunk conductor and relay 204 will be energized. By the operation of relay 204 conductor 102 is connected to shaft springs 225 and ground is disconnected therefrom. The connector F may now be operated in the usual manner to raise its wipers to the second level. When this occurs the shaft springs 225 and 226 are closed. At the end of the vertical movement of the switch the slow acting relay 205, which was energized in series with the vertical magnet, is deenergized and a circuit is completed which extends from the discriminating trunk conductor 102 by way of armature 223 and its working contact, shaft springs 225 and 226, armature 227 and its resting contact, and the winding of the release magnet 212 to battery. The closure of the above circuit is without effect, however, because of the fact that the discriminating trunk conductor 102 is connected to ground through a resistance of 500 ohms. The release magnet 212 is therefore not energized and the call is permitted to go through as described in the foregoing paragraphs. Suppose now that the calling subscriber is a subscriber in class 1. The operations which take place when the call is attempted will be precisely as described in the preceeding case except that direct ground will be placed on the discriminating trunk conductor 102, and when the slow acting relay 205 deenergizes the release magnet 212 will be operated to release the connector. It will be evident then that a subscriber in class 1 cannot obtain access to the special trunks. If the calling subscriber is a subscriber in the second class, when the connection is attempted no ground at all will be applied to the discriminating trunk conductor. In this case relay 204 will not be energized and the shaft spring 225 will remain connected to ground at armature 224 of the said relay 204. In this case when the slow acting relay 205 falls back at the end of the vertical movement of the switch a circuit will be completed for the release magnet as in the previous case, except that the circuit is grounded locally within the connector F, and the release magnet will be operated to restore the connector F to normal. Thus subscribers in the second class are also prevented from connecting with the special trunk lines.

There is one other feature which may be described, when it is believed that the explanation will have been completed. This feature has to do with the use of one of the special trunk circuits as a watchman's service trunk. When used in this manner the trunk is reached from a set of bank contacts in one of the local levels and except for this the circuit may be precisely as shown in the drawing. The relay which corresponds to the pilot relay 288, however, will, in this case, be individual to the trunk and may be arranged so that when operated it will serve to close an alarm circuit including a number of gongs or other signals located at suitable points on the premises. If the watchman desires to make an outgoing call at any time during the night he may do so from any telephone within reach regardless of whether such phone is arranged for outgoing service or not. At the manual office the trunk is not only equipped with the usual answering jack and lamp but it has the usual multiple at the B board like an ordinary subscriber's line, and the number assigned to this trunk is the number used for calling the company's premises after business hours. When a call is received the various gongs or signals are operated in a manner which will be readily understood and the watchman, no matter where he happens to be, is notified that somebody is calling him. He will then answer the call by calling the number assigned to the trunk from the nearest phone in the branch exchange, and since the trunk is terminated in one of the local levels he can do

this from any telephone. This is a great convenience as otherwise the watchman would have to go to a telephone which was arranged for outgoing service and a telephone of this kind might not be as accessible as the more numerous telephones which are arranged for local service only.

Having described my invention, what I consider to be new and desire to have protected by Letters Patent will be pointed out in the appended claims.

What I claim as my invention is:

1. In a telephone system, selector and connector switches for connecting calling and called lines, service restricting means for each line, service restricting means in the selectors, and service restricting means in the connectors, the said means cooperating to divide the subscribers into three classes in accordance with the kinds of service they are entitled to.

2. In a telephone system, subscribers' lines divided into three classes according to the kinds of service they are entitled to, serially related selector and connector switches for establishing local connections, a group of trunk lines accessible to said selectors, another group of trunk lines accessible to said connectors, service restricting means individual to each line, service restricting means in the selectors cooperating with said individual means for preventing the subscribers in one class from connecting with the first group of trunk lines, and service restricting means in the connectors cooperating with said individual means for preventing the subscribers in another class from connecting with the second group of trunk lines.

3. In a telephone system, a central exchange comprising serially related selector and connector switches for connecting calling and called lines, a group of trunk lines accessible to said selectors, another group of trunk lines accessible to said connectors, and service restricting means in the exchange dividing the subscribers into three classes, the subscribers of one class being denied access to the first group of trunk lines and the subscribers of two classes being denied access to the second group of trunk lines.

4. In a telephone system, a private automatic exchange, a public multi-office exchange, two groups of trunk lines extending from the private automatic exchange to two different offices of the public exchange, respectively, two serially related groups of automatic switches from which said two groups of trunk lines are accessible, respectively, and service restricting means including mechanism in the switches in each of said groups dividing the subscribers of said private automatic exchange into three classes, the subscribers of one class being restricted to local calls, the subscribers of another class being restricted to local calls and trunked calls to one of said offices, while the subscribers of the third class have unrestricted service to local lines and both of said offices.

5. In a telephone system, a private automatic exchange, a public multi-office exchange, outgoing trunk lines extending from the private exchange to the nearest office in the public exchange, selector switches to which said trunks are accessible, a group of special trunk lines extending from the private exchange to each office in the public exchange, connector switches to which said special trunks are accessible, local lines accessible to said connectors but not to said selectors, and service restricting means including mechanism in said switches dividing the subscribers of said private exchange into three classes, the subscribers of one class being restricted to local calls only, the subscribers of another class being restricted to local calls and regular outgoing calls, while the subscribers of the third class are unrestricted and can establish local calls, regular outgoing calls, and calls over said special trunk lines.

6. In a telephone system comprising a plurality of manual offices, a private automatic exchange, a group of special three digit trunk lines from the private exchange to each manual office for giving direct service between the private exchange and the manual offices, another group of one digit trunk lines between the private exchange and the nearest manual office for handling ordinary outgoing calls from the private exchange, selectors for handling calls to said one digit trunk lines, connectors cooperating with said selectors for handling calls to said three digit trunk lines, service restricting means, and release mechanism in each of said switches automatically responsive to release said switches when they are operated in an attempt to obtain connections to which the calling subscribers are not entitled.

7. In a telephone system, a private exchange including automatic switches, incoming trunk lines accessible to each of said switches, distinctive signals associated with said trunk lines and operable when calls are received thereover, and means for answering any received calls by directively operating one of said switches to connect with the trunk line associated with the signal which is operated, said means including an automatic telephone, and automatic progressively movable switching mechanism for connecting said telephone to the first idle one of said switches.

8. In a telephone system, a manual exchange, and an automatic exchange, a two-way trunk line connecting said exchanges

and accessible to automatic switches in the automatic exchange, means for calling the automatic exchange over said trunk line from the manual exchange including means for operating a signal associated with the said trunk without making the trunk line busy, means for answering the call by directively operating one of said switches to connect with said trunk line, and means for operating the same or another one of said switches to extend a connection to the manual exchange over said trunk line after the first connection is released.

9. In a telephone system comprising a plurality of manual offices, a private automatic exchange, special trunk lines connecting said exchange with each of said offices, automatic switches having access to said trunk lines in the said exchange, distinctive signals associated with said trunks at the said exchange, the said signals being operable when calls are received and being located so as to be perceived by a plurality of individuals, and means whereby when any call is received the individual whose duty it is to answer the call may do so by directively operating the first idle one of said switches to connect with the trunk line associated with the signal displayed.

10. In a telephone system, a plurality of lines, a distinctive signal associated with each line, said signals being responsive to incoming calls, an automatic progressively movable switch in which all of said lines are terminated, a plurality of similar switches, a calling device for operating one of said switches in accordance with the number of any line to answer a call received thereover, and an automatic hunting switch for connecting said calling device with the first idle one of said switches.

11. In a telephone system, a plurality of lines, a distinctive signal associated with each line, means for operating the associated signal when a call is received over any line, an answering telephone common to all of said lines and normally disconnected, an automatic progressively movable switch having access to all of said lines, and a calling device associated with said telephone for generating series of impulses for operating said switch to connect the said telephone with any line to answer a call thereover when the associated signal is displayed.

12. In a telephone system, a plurality of lines, an automatic switch having access to said lines, means for operating said switch to connect with any line to extend an outgoing call thereover or to connect with any line to answer an incoming call, signals at opposite ends of each of said lines responsive to incoming and outgoing calls, respectively, and means in said switch for actuating the outgoing call signals or disabling the incoming call signa's, depending upon whether the switch is in use for outgoing or incoming calls.

13. In a telephone system, a two-way trunk line having a terminal at one end thereof, an automatic progressively movable switch having access to said terminal when operated in accordance with a particular call number, and means for operating said switch to extend calls over said trunk line in one direction or to answer cal's coming in over said trunk line in the other direction.

14. In a telephone system, a two-way trunk connecting automatic and manual exchanges, a terminal for said trunk in the manual exchange adapted to be connected with by means of manual operators' equipment to answer incoming calls from the automatic exchange, a terminal for said trunk in the automatic exchange, and an automatic progressively movable switch for connecting with said last mentioned terminal to answer calls incoming from the manual exchange.

Signed by me at Chicago, Cook county, Illinois, this 8th day of September, 1920.

CLARENCE E. LOMAX.