Sept. 29, 1931. N. G. GOLJE 1,825,395

DEVICE FOR PRINTING ON LONG WEBS OF PAPER, CLOTH, OR THE LIKE IN PLATEN PRESSES

Filed Jan. 18, 1929

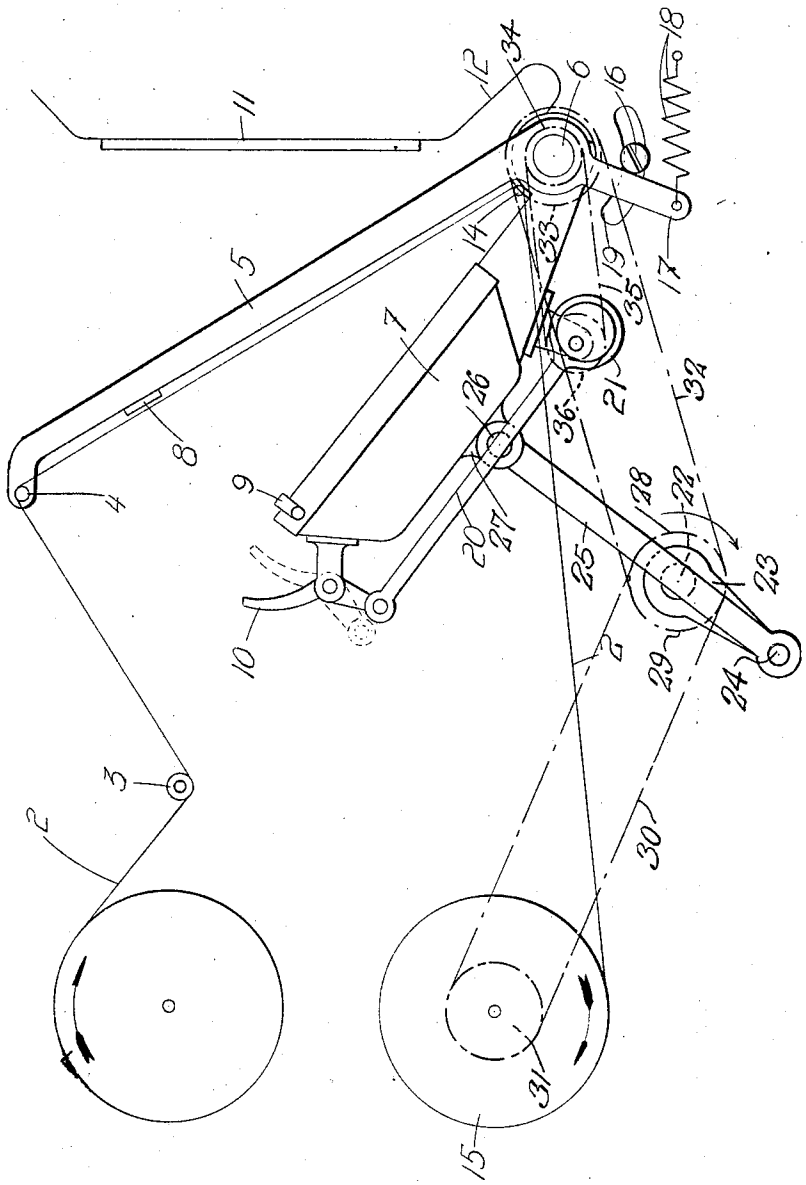

Inventor:
Nils Gunnar Golje,
by Berthold Oblatt,
Attorney.

Patented Sept. 29, 1931

1,825,395

UNITED STATES PATENT OFFICE

NILS GUNNAR GOLJE, OF STOCKHOLM, SWEDEN

DEVICE FOR PRINTING ON LONG WEBS OF PAPER, CLOTH, OR THE LIKE IN PLATEN-PRESSES

Application filed January 18, 1929, Serial No. 333,440, and in Sweden January 24, 1928.

This invention relates to a device for use in platen presses with stationary or movable form-bed and a platen movable to and from said bed for the intermittent feeding of a web of paper or the like to be printed, which web passes from a storing roller is moved between the platen and the type bed and then passes to a collecting roller, the web being cut after having left the latter.

According to the invention the web is guided between the platen and the bed by means of cross-bars on a clamp movable about an axis coaxial with platen and held by means of springs or the like in a predetermined initial angular position between the bed and the platen, when the latter is swung away, and in addition shoulders are provided on the platen in such a way that at the movement of the platen towards the bed they press the web against shoulders on the clamp, and then press the web against shoulders on the clamp and then move the web and with it the clamp to the bed, against the action of the springs, and the paper path, so that prior to each printing the path is unrolled from the collecting roller, while at the return movement of the platen the web is released by the shoulders, so that it can be wound on to the collecting roller by a driving gear connected with the collecting roller by means of a suitable friction clutch coupling.

In the accompanying drawing an embodiment of the invention is diagrammatically shown; the figure is a side view of the device combined having a platen press with stationary form-bed. Only necessary parts of the press are shown.

1 designates a roller, from which the web 2 is delivered, and 15 is another roller, on which the web is wound after the printing, and which is intermittently rotated by means of a friction clutch coupling; 3 is a guide roller, and 14 a guide roller or a bar for guiding the web. After having passed the guide roller 3 the web is carried over a rod 4 secured to one or two arms 5 actuated by springs or weights and rotatably mounted on a stationary shaft 6, the geometric axis of which is coincident with the axis of rotation of the platen 7. Thus the bar 4 and the arms 5 form a turnable clamp. In the shown embodiment each arm 5 has the form of a cranked lever, the shorter arm 17 of which is actuated by a tension spring 18 tending to carry the arm 5 away from the printing form 11 mounted on the foundation-plate 12 of the press. A screw 16 adjustable in an arcuate slot 19 serves as a stop for the shorter arm 17, and thereby the swinging movement of the rod 4 from the printing form 11 can be limited. The guide roller 14 should be so arranged in relation to the printing form and the position of the rod 4 so adapted that no breaking of the web between the bar and the guide roller will occur when the web is pressed against the printing form by the platen. Across the arms 5 a shoulder 8 is arranged, which is adapted to co-operate with rotatable shoulders 10 on the platen 7, which shoulders 10 at the swinging motion of the platen 7 towards the clamp, press the web against the shoulder 8 and together with the clamp 5 towards the printing form 11.

The platen 7 has other shoulders 9 co-operating with the clamp 5 on both sides of the web 2. The printing being ended, the platen 7 is swung back from the printing form 11, whereby the web follows the platen and the clamp pressed against the shoulders 9 and 10 thereon by means of the springs 18. At the beginning of this movement and as soon as the web has left the printing form 11, the shoulders 10 are turned away from the web in order to gain longer time for the rolling up of the web. The shoulders 9, with which the clamp is still in engagement, then prevent the clamp from swinging past the platen under the influence of the springs 18. The rotation of the shoulders 10 is effected by means of bars 20 connected with eccentrics 21 on the platen, said eccentrics being rotated by the driving shaft of the press. Of course, the bar 20 may be actuated by another device, for instance by a connecting rod gear with special driving member.

22 indicates the main drive shaft of the press. On this shaft 22 there is fixedly mounted a crank 23, rotatably connected by means of a pin 24 with one end of a connecting rod 25, the other end of which is rotatably con-

nected by means of another pin 26 with lugs 27 on the platen 7 for the purpose of oscillating the latter about the shaft 6. On the shaft 22 there are further mounted two chain wheels 28 and 29. Over the chain wheel 28 is trained an endless chain 30 which encompasses a chain wheel 31 placed on the shaft of the roller 15, said chain wheel driving the roller 15 by means of a suitable friction clutch coupling (not shown).

A second endless chain 32 runs over the chain wheel 29 and over another chain wheel 33 mounted on the shaft 6, the latter chain wheel being combined with a third chain wheel 34. A third endless chain 35 runs over this chain wheel 34 and over a chain wheel 36 mounted on the shaft of the eccentric 21 for their driving.

As soon as the shoulders 10 have left the web free, the coil previously drawn forth and printed is rolled on to the roller 15.

Instead of the shoulders 9 and 10 respectively one may use a single, fixed shoulder, in which case the web is held fast until the clamp has returned to its initial angular position, where the platen leaves the web, and thereafter the coil of the web drawn forth is rolled up in the above-mentioned manner. In the embodiment as shown, of course, a longer time for the rolling up, what may be of importance when it is about rolling up longer parts of the web drawn forth.

In the shown embodiment the length of the coil of the web drawn forth is fixed by the distance of the bar 4 from the shaft 6 and by the angle of rotation. The angle of rotation may, as mentioned before, be regulated by adjusting the set screw 16. Instead of having the clamp actuated by the platen, as described above, one can for gaining a still longer drawing forth length of the web arrange the shoulders 9 and 10 respectively on special arms rotatable round the shaft 6 of the platen, said arms being actuated by a special driving gear for instance by a gear from the driving shaft of the platen. Said arms may then be brought to make or to give the clamp 5 two or more swinging movements during one swinging to and fro of the platen.

Having now described my invention, what I claim as new and desire to secure by Letters Patent is:

1. A platen press having a form bed, a platen rotatable into and out of co-operating relation with said bed, a roller carrying a roll of paper, a second roller on which the paper winds after passing between said bed and said platen, a clamp rotatable coaxially with said platen, means for normally maintaining said clamp in an angular, idle position, and shoulders on said clamp and said platen co-operating to withdraw paper from said first roller upon movement of said platen towards said bed and releasing the paper upon return movement to permit winding thereof on said second roller.

2. A platen press having a form bed, a platen rotatable into and out of co-operating relation with said bed, a roller carrying a roll of paper, a second roller on which the paper winds after passing between said bed and said platen, a clamp rotatable coaxially with said platen, adjustable means for normally maintaining said clamp in an angular, idle position, and shoulders on said clamp and said platen co-operating to withdraw paper from said first roller upon movement of said platen towards said bed and releasing the paper upon return movement to permit winding thereof on said second roller.

3. A platen press having a form bed, a pivotally mounted platen adapted to move into and out of co-operating relation with said bed, a roller carrying a roll of paper, a second roller on which the paper web winds after passing between said bed and said platen, a clamp having shoulders rotatable coaxially with said platen, means for normally maintaining said clamp in an angular, idle position, movable shoulders on said platen, said clamp and platen shoulders co-operating to withdraw paper from said first roller upon movement of said platen toward said bed and releasing the paper upon return movement to permit winding thereof on said second roller, and means for moving said platen shoulders away from the paper web prior to the clamp reaching idle position.

4. A platen press having a form bed, a pivotally mounted platen adapted to move into and out of co-operating relation with said bed, a roller carrying a roll of paper, a second roller on which the paper web winds after passing between said bed and said platen, a clamp having shoulders rotatable coaxially with said platen, means for normally maintaining said clamp in an angular, idle position, movable shoulders on said platen, said clamp and platen shoulders co-operating to withdraw paper from said first roller upon movement of said platen toward said bed and releasing the paper upon return movement to permit winding thereof on said second roller, means for moving said platen shoulders away from the paper web prior to the clamp reaching idle position, and means for preventing said clamp from moving past said platen upon returning to idle position with the movable shoulders being moved away.

In witness whereof, I have hereunto signed my name.

NILS GUNNAR GOLJE.