April 11, 1967 H. BIERI 3,313,215

CYLINDER AND PISTON ARRANGEMENT

Filed Oct. 18, 1965 2 Sheets-Sheet 1

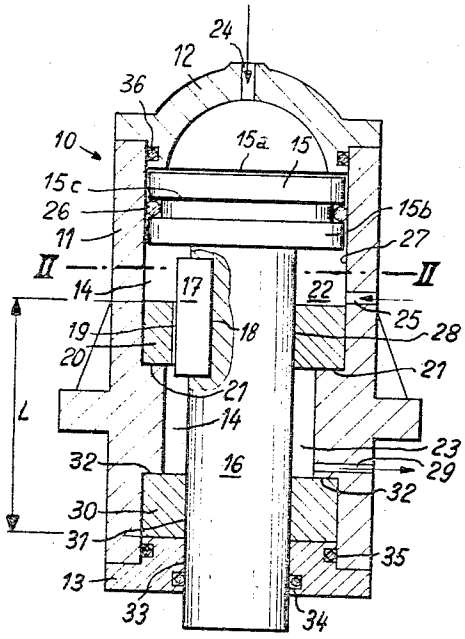

FIG. 1

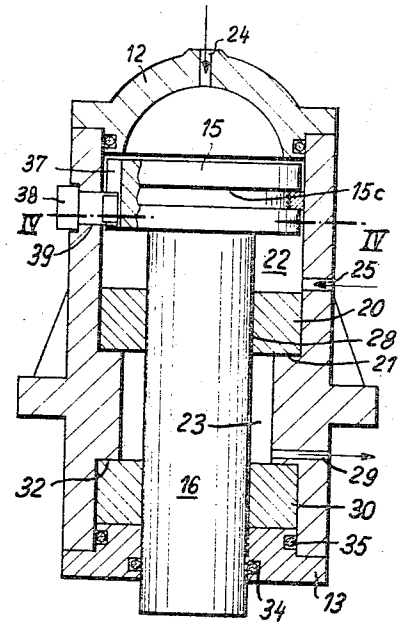

FIG. 3

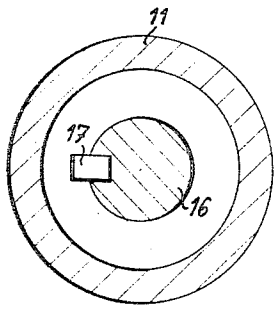

FIG. 2

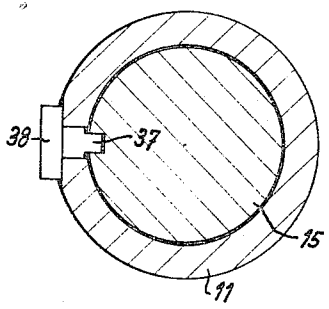

FIG. 4

INVENTOR
HANS BIERI
BY Werner W. Kleeman
His Attorney

April 11, 1967 H. BIERI 3,313,215

CYLINDER AND PISTON ARRANGEMENT

Filed Oct. 18, 1965 2 Sheets-Sheet 2

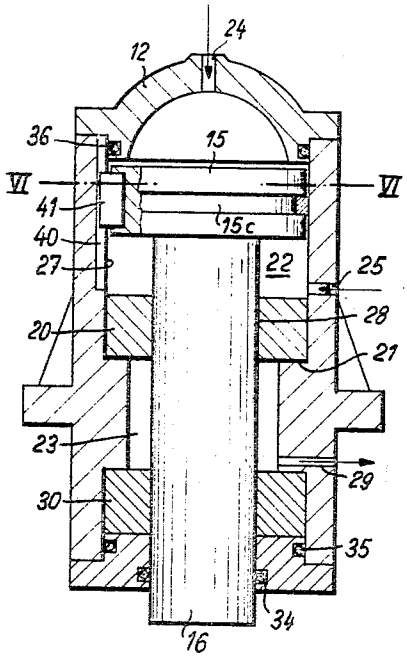

FIG. 5

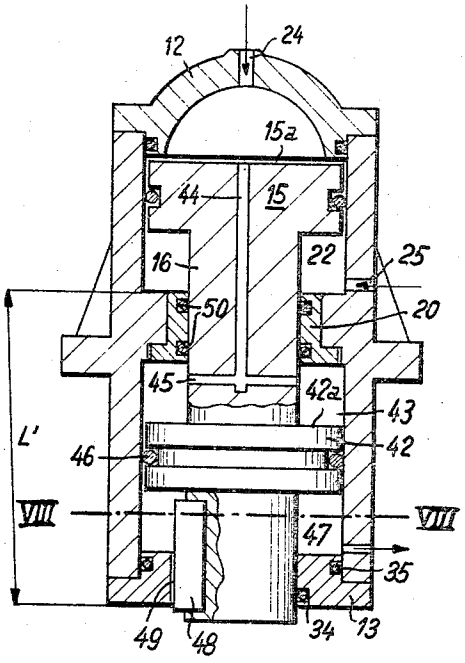

FIG. 7

FIG. 6

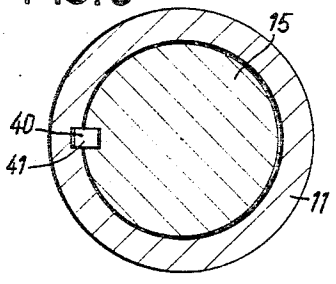

FIG. 8

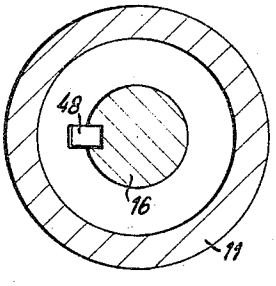

INVENTOR
HANS BIERI
BY Werner W. Kleeman
His Attorney

United States Patent Office

3,313,215

Patented Apr. 11, 1967

3,313,215

CYLINDER AND PISTON ARRANGEMENT

Hans Bieri, Uster, Switzerland
(Obereck, Pfaffikon, Zurich, Switzerland)

Filed Oct. 18, 1965, Ser. No. 497,428
Claims priority, application Switzerland, Feb. 9, 1962, 1,606/62
5 Claims. (Cl. 92—86)

This application is a continuation-in-part of my copending, United States application, Ser. No. 256,017, filed February 4, 1963 and entitled, "Cutter For Separating a Strand of Material," now patent No. 3,224,310.

The present invention has reference to an improved cylinder and piston arrangement, particularly for large hydraulic machinery, and especially suitable for use in conjunction with operable elements, where due to the nature of the operation, the piston should not rotate relative to the cylinder.

Such type applications occur, for instance, during the cutting of metal stock, such as bars or rods which may be in transit during the time of cutting. Whether the metal rod or bar is moving or not, in any case a cutter means which may have one cutter-knife or cutter element attached to the piston rod or ram of the piston slidably arranged in the cylinder should not rotate relative to the cylinder, otherwise such cutter element will not be properly positioned with respect to its cooperating cutter element.

Now, the prior art has already proposed a number of solutions for preventing rotation of a piston within its cylinder. According to one known construction the means for preventing rotation of the piston are located externally of the cylinder housing and thus require a relatively massive support and separate provision for lubricating such rotation-preventing means. Not only does such physical structure increase the cost of manufacture for this type piston and cylinder arrangement, but furthermore, it is quite complicated in operation, requiring considerable maintenance to keep it properly functioning.

Now a primary object of my invention is to provide an improved working cylinder and working piston arrangement wherein there is provided means for preventing rotation of the piston which as least partially extends into the compartment of the cylinder and is lubricated by the same working medium used to drive the piston, to thereby effectively protect such rotation-preventing means and render same free from soiling and maintenance.

A further, important object of this invention has reference to an improved working cylinder and working piston arrangement wherein the piston and piston rod are prevented from rotating relative to the longitudinal axis of the cylinder, the arrangement effected such that the pressurized working medium used to reciprocate the piston can also be employed for lubricating the structure which prevents rotation of such piston.

Still another noteworthy object of this invention is to provide a cylinder and piston arrangement wherein the piston rod connected with the piston is guided at spaced locations axially thereof, so that it is possible to refrain from using the outer surfaces of the piston for guiding thereof, whereby the piston itself operates with play with regard to the walls of the cylinder compartment.

Yet a further important object of this invention is to

provide an improved working cylinder and working piston arrangement where the sealing members for the piston rod are not subjected to the high pressure of the working fluid medium used to reciprocate the piston, rather to the lower pressure of leakage working medium collected at reduced pressure in a collecting chamber disposed externally of the chamber in which the pressurized working fluid medium acts upon the piston, so that it is possible to increase the life of these piston rod-sealing members, to have less friction losses and, in fact, less leakage losses towards the outside of the cylinder.

In order to implement these and still further objects of my invention, which will become more readily apparent as the description proceeds, the new and improved cylinder and piston arrangement of my invention comprises cylinder means incorporating a cylinder housing internally providing a cylinder compartment, with at least one piston including a piston rod slidably disposed for reciprocation within said cylinder compartment. Means are provided for the cylinder means for admitting a working medium under pressure into said cylinder compartment in order to reciprocate the aforesaid piston. Additionally, and according to an important aspect of this invention, there is further provided means for preventing rotation of the piston relative to the cylinder means, said rotation-preventing means extending at least partially into the cylinder compartment and being lubricated by the working medium.

My invention also contemplates providing an improved guiding action for the piston rod in that, at least one and preferably two guide sleeves which are spaced from one another are arranged in the cylinder housing and slidably guide the piston rod carrying the piston along a fixed guide path. By virtue of this feature it is possible to construct the piston to have play with respect to the walls of the cylinder compartment, so that no effective guiding action prevails between the piston and cylinder walls, guiding of such piston being primarily provided at such guide sleeve or sleeves. Moreover, the at least one guide sleeve divides the cylinder compartment into two chambers, one of which provides a piston chamber for the piston and the other a collecting chamber for working medium which has leaked past such guide sleeve and out of the one chamber containing the piston. Advantageously, this guide sleeve provides a throttle means for reducing the pressure of the leaked working medium considerably below that prevailing at the time such working medium is used to drive the piston within the piston chamber, so that the sealing rings for the piston rod are only subjected to the considerably lower pressure of the leaked working medium, thereby ensuring for increased life of these sealing rings, less friction losses, and less loss of leakage medium towards the outside. There are still further important features of my invention, yet such will be explained in considerable detail hereinafter.

Thus, other features, objects and advantages of the invention will become apparent by reference to the following detailed description and drawings wherein like reference characters have been used for substantially the same or analogous elements throughout the various embodiments, and in which:

FIGURE 1 is a vertical sectional view through a first embodiment of cylinder and piston arrangement designed according to the teachings of the present invention;

FIGURE 2 is a sectional view of the cylinder and piston arrangement of FIGURE 1, taken along line II—II thereof;

FIGURE 3 is a vertical sectional view of a second embodiment of inventive cylinder and piston arrangement;

FIGURE 4 is a cross-sectional view of the piston and cylinder arrangement of FIGURE 3, taken along line IV—IV thereof;

FIGURE 5 is a vertical sectional view of a third embodiment of inventive cylinder and piston arrangement;

FIGURE 6 is a cross-sectional view of the cylinder and piston arrangement of FIGURE 5, taken along line VI—VI thereof;

FIGURE 7 is a vertical sectional view, similar to the previous figures, showing a variant form of cylinder and piston arrangement according to the present invention employing two piston members; and

FIGURE 8 is a cross-sectional view of the cylinder and piston arrangement of FIGURE 7, taken along line VIII—VIII thereof.

Describing now the drawings, and initially turning attention to the embodiment of cylinder and piston arrangement depicted in FIGURES 1 and 2, it will be recognized that the cylinder arrangement or means **10** comprises an open-ended cylinder housing **11**—assumed here to be vertically arranged, but obviously could assume other positions—and which is closed at one end by a dome-shaped upper cover member **12** and at the opposite end by a lower cover member **13**. The cylinder housing **11** is hollow so as to provide therein a cylinder compartment **14** in which there is slidably arranged at least one piston **15** having a piston rod **16** to which there can be connected any suitable operable element which is to be driven.

Means are provided for preventing rotation of the piston **15** and its piston rod **16** relative to the cylinder housing **11**. In this exemplary embodiment such means comprises a linear guide device composed of a keyway arrangement having a key **17** affixed to a slot **18** provided at the piston rod **16** and slidable in a straight slot or keyway **19** formed at an upper guide sleeve or bushing **20**. It will be noticed that this guide sleeve or bushing **20** is arranged internally of the cylinder compartment **14**, bears against inwardly directed shoulders **21** provided at the cylinder housing **11** and serves to divide the cylinder compartment **14** into two chambers **22** and **23**. The chamber **22** provides the piston chamber in which the piston **15** is reciprocated, whereas the other chamber **23** provides a collecting chamber for receiving and collecting any working medium used to reciprocate such piston **15** which may leak past the guide sleeve **20**.

Now in order to be able to admit a working medium under pressure to opposite faces of the piston member **15** so as to reciprocate the latter in a controlled manner, the dome-shaped upper cover member **12** is provided with a central aperture or bore **24** which communicates a non-illustrated supply source, of any desired construction and known to the art, containing a working medium under pressure with the upper face **15***a* of the working piston **15**, whereas a further aperture or bore **25** provided at the side wall of the cylinder housing **11** communicates the means for supplying pressurized working medium with the lower face **15***b* of the piston **15**. It should thus be apparent that by selectively admitting in alternation pressurized working medium via the bores **24** and **25** it is possible to reciprocate in controlled manner the piston member **15** within the piston chamber **22**. It will also be noticed that piston member **15** is provided with a recessed portion or slot **15***c* at its central region in which there is inserted a piston sealing ring **26** which here encircles the entire piston **15**. The external diameter of the piston **15** is advantageously smaller than the diameter of the walls **27** bounding the piston chamber **22** for the piston **15**, so that the latter slides with play within such chamber **22**. In other words, the surfaces of the piston **15** do not contact the walls **27** of the piston chamber **22** to guide the piston therein.

In the first instance such guiding action is provided by the guide sleeve or bushing **20** having a central bore **28** through which the piston rod **16** piercingly extends. This guide sleeve or bushing **20** also has the important function of providing a throttle means for throttling working medium which is under relatively high pressure in the piston chamber **22** and which seeps past the piston rod **16** and through the central bore **28** into the collecting chamber **23**, to thereby considerably reduce such pressure, typically to the static pressure prevailing in the non-illustrated leakage working medium return lines communicating with a bore **29** at the cylinder housing **11** and leading to the collecting chamber **23**, so that the leakage working medium, for instance oil, can be returned to a suitable reservoir or supply source (not shown). It should thus be appreciated that in this embodiment, the means for preventing rotation of the piston **15** and piston rod **16** relative to the cylinder means **10**, namely the key **17** and keyway **19** are lubricated by the same pressurized working medium used to drive the piston **15**, each time such pressurized medium is admitted through bore **25** to drive piston **15** towards the dome-shaped cover member **12**. Hence, no separate lubricating arrangement is necessary for the lubrication of the piston rotation-preventing means and since it is within the cylinder housing **11** it is completely protected from dirt.

In this exemplary illustrated embodiment, there is also provided axially of the piston rod **16**, and in spaced relation with respect to the guide sleeve or bushing **20**, a further guide sleeve or bushing **30** which is located remote from the piston chamber **22** and here bounds the collecting chamber **23**. This guide sleeve or bushing **30** provides a further guide location for the piston rod **16**, and it will be seen that a fixed guide path which extends at least over the length L is provided for the piston rod **16** by virtue of these two spaced guide sleeves or bushings **20** and **30**. Of course, the lower cover member **13** also provides a guiding action at the piston rod **16**. This lower cover member **13** presses the guide sleeve **30** provided with a central bore **31** through which piercingly extends the piston rod **16**, against the shoulders **32** of the cylinder housing **11**. This cover member **13** is also provided with a central bore **33** through which extends the piston rod **16** towards the outside of the cylinder **10**. Furthermore, the cover member **13** is provided with sealing rings **34** and **35**, the sealing ring **34** cooperating with the slidable piston rod **16**, whereas the sealing ring **35** cooperates with the inner walls of the cylinder housing **11**.

It will be recalled that is was previously mentioned that the pressure of the leakage or leaked working medium collected in the collecting chamber **23** is considerably below the pressure prevailing at such working medium when disposed in the piston chamber **22** in which the piston **15** is driven. By virtue of the fact that the working medium located in collecting chamber **23** is at a reduced pressure, the sealing rings will only be subjected to the low pressure working medium which may seep along the piston rod **16** and the bores **31** and **33** of the sleeve **30** and cover **13**, respectively, so that the service life of these sealing rings, particularly ring **34**, is considerably increased, there is less friction losses, and less leakage of working medium contained in chamber **23** towards the outside of the cylinder. Finally, it is mentioned that the cover member **12** is also provided with sealing ring means **36** which engage with the upper end of the inner walls **27** of the cylinder housing **11**.

In the variant embodiment of cylinder and piston arrangement depicted in FIGURES 3 and 4, it will be immediately recognized by comparing the two embodiments that there is a certain basic similarity between the two constructions, so that like reference characters have again been conveniently employed for the same or analogous elements, and now only the differences between the two

embodiments will be considered in detail. In this embodiment, the means for preventing rotation of the piston **15** and piston rod **16** are not provided at the guide sleeve **20**, rather are arranged at the cylinder housing **11** and the piston **15**. Specifically, by referring to FIGURE 3 it will be noted that the piston **15** is provided with an axially extending keyway **37** in the form of a slot into which engages a stepped key member **38**. The latter is affixed to the walls of the cylinder housing **11** and extends through a bore **39** provided at such walls into engagement with the keyway slot **37**. In all other respects the embodiment depicted in FIGURES 3 and 4 is similar to that described in connection with FIGURES 1 and 2.

The embodiment of cylinder and piston arrangement depicted in FIGURES 5 and 6 is also quite similar to the embodiments previously disclosed, for which reasons the same reference characters have again been used for similar elements. In this embodiment there is basically a reversal of the arrangement of key and keyway of FIGURES 3 and 4, since here the inner wall **27** of the cylinder housing **11** is provided with a lengthwise extending keyway slot **40** and the piston **15** carries the key **41** which slides within the keyway slot **40**. With respect to the arrangements disclosed in the embodiments of FIGS. 3 and 5, the key and keyway arrangement of FIGURE 3 is somewhat preferred because, it must be remembered that since these cylinders are typically designed for large hydraulic machines the inner walls **27** cannot be readily hardened and ground, whereas it would be easier to grind and harden the surface of the piston **15**, so that it would be preferable to have the keyway slot arranged at such hardened and ground piston **15**. Once again, it is mentioned by way of completeness that the remaining physical structure and operation of this last-considered embodiment is similar to the previous embodiments.

The remaining embodiment depicted in FIGURES 7 and 8 differs from those previously disclosed, in the first instance in that here there is provided a further piston member **42** slidably arranged in the lower chamber or compartment **43** formed by the guide sleeve or bushing **20** which separates lower compartment **43** from the upper compartment or chamber **22** in which the piston **15** is slidably arranged. This guide sleeve **20** again provides a guiding action at the piston rod **16** and also is provided with sealing rings **50**. It will also be seen that the piston rod **16** is provided with an axially extending central bore **44** which communicates with radially extending ducts **45**. Thus working medium under pressure coming from the bore **24** at the dome-shaped cover member **12** not only acts against the upper face **15***a* of the piston **15** but can also move through the central bore **44** and radial ducts **45** to act against the upper face **42***a* of the piston **42**, to thus further assist in moving the piston rod **16** downwards in the cylinder housing **11**.

In this embodiment it is to be understood that the piston **42** also provides a throttle path for any working medium under high pressure which seeps past the piston ring **46** thereof from the upper chamber region of the chamber **43** above piston face **42***a* into the lower chamber portion or region **47**, the latter corresponding in function to the collecting chamber **23** for leakage oil of the previous embodiments. Here, however, due to the fact that a further piston **42** is movable within the chamber **43** of the cylinder housing **11**, this collecting chamber **47** is an expansible one, i.e. its volume changes depending upon the movement of the throttling piston member **42**. Thus, any leakage working medium contained in the collecting chamber portion **47** is at considerably lower pressure than the pressure prevailing in the upper portion of chamber **43** and also in the chamber **22**. It will also be noted that in this embodiment the means for preventing rotation of the piston rod **16** and the piston **15** and **42** relative to the cylinder housing **11** comprise a key **48** carried by the piston rod **16** which cooperates with a keyway **49** provided at the lower closure member **13**. Here, this lower cover or closure member **13** also serves to guide the piston rod **16** together with the guide sleeve **20** spaced axially therefrom, and in this embodiment the second guide sleeve or bushing **30** has been omitted, since here the cover member **13** completely takes over its function to provide together with the sleeve **20** a fixed guide path for the path for the piston rod **16**, as designated by reference character L'. It should also be appreciated that the key **48** and keyway **49** are lubricated by the collected leaked or leakage working medium appearing in the collecting chamber **47** and the sealing rings **34**, **35** are only exposed to the low pressure of the thus collected medium.

Finally, it is mentioned that while in the embodiment of FIGURE 1 the key and keyway arrangement are lubricated during such time as a pressurized working medium is admitted through bore **25** for the upstroke of the piston **15**, in the embodiments of FIGURES 3 and 5 the key and keyway are lubricated during both the up- and downstroke of the piston member **15**. However, in each of the embodiments disclosed herein the same working medium which is used to drive the working piston **15** is also employed for lubricating the means which prevent rotational movement of said piston within its cylinder housing **11**. Also, by way of completeness it is pointed out that in those instances where the key and keyway are arranged at the piston **15**, the piston sealing ring **26** would, of course, be interrupted at the point of provision of such key and keyway, such also being the case for the sealing ring **34** (FIGURE 7).

Thus, not only have I provided a new and improved arrangement for guiding a piston and piston rod within its cylinder, but I have also effectively prevented rotation of the piston relative to the cylinder by means which at least partially extend into the compartment of the cylinder and are lubricated by the working medium. Furthermore, in each of the embodiments disclosed I have provided a collecting chamber and a throttle means so that the pressure of the working medium moving into the collecting chamber is considerably reduced, whereby at least the packing seals for the piston rod are subjected only to a relatively low pressure leakage working medium, so that their longevity and service is considerably enhanced, the friction losses are reduced, and there is less leakage loss towards the outside of the cylinder. These are only some of the more important advantages which are gained by virtue of the teachings of my invention.

While there is shown and described present preferred embodiments of the invention it is to be distinctly understood that the invention is not limited thereto but may be otherwise variously embodied and practised within the scope of the following claims.

What is claimed is:

1. A cylinder and piston arrangement comprising a housing having a chamber formed therein; a guide sleeve having a bore therethrough dividing said housing chamber into a cylinder compartment and a working fluid collecting chamber; closure means at the opposite ends of said housing chamber closing said cylinder compartment and said collecting chamber; at least one piston means including a piston slidably disposed in said cylinder compartment and a piston rod slidable in said bore; the relative sizes of said piston rod and bore being such as to provide for the restricted leakage of fluid around said piston rod and into said collecting chamber to thereby considerably reduce the pressure of said leaked working fluid in said collecting chamber; means for admitting a working fluid under pressure into said cylinder compartment for reciprocating said piston and said piston rod; rotation preventing means located at least partially in said housing chamber and comprising a cooperating key and keyway means, one of said key and keyway means being fixed relative to the housing chamber, the other of said key and keyway means being located on the exterior peripheral surface of said piston means whereby said rota-

tion preventing means is lubricated by said working fluid.

2. A cylinder and piston arrangement as defined in claim 1, including an additional guide sleeve supported within said housing and spaced axially from said first mentioned guide sleeve, said second mentioned guide sleeve having a bore therethrough, through which said piston rod extends.

3. A cylinder and piston arrangement as defined in claim 2 wherein the closure means at the end of the housing chamber having the collecting chamber is provided with a sealing ring whereby said sealing ring will be subjected to a reduced pressure in said collecting chamber.

4. A cylinder and piston arrangement as defined in claim 1, wherein the closure means at the end of the housing chamber having the collecting chamber is provided with a sealing ring whereby said sealing ring will be subjected to the reduced pressure present in said collecting chamber.

5. A cylinder and piston arrangement as defined in claim 1 wherein said piston is provided with the keyway and said key is carried by said cylinder housing and cooperates with said keyway.

References Cited by the Examiner

UNITED STATES PATENTS

904,528	11/1908	Hamilton et al.	92—111 X
2,000,265	5/1935	Vickers	92—86 X
2,550,601	4/1951	Rosenberg	92—166
2,744,802	5/1956	Strayer	92—166 X
2,801,618	8/1957	Place et al.	92—86 X
2,815,737	12/1957	Gold et al.	92—86 X
2,956,549	10/1960	Malpass	92—165 X
3,213,765	10/1965	Knable	92—151 X
3,253,519	5/1966	De Roo	92—110

FOREIGN PATENTS

697,619	10/1940	Germany.

MARTIN P. SCHWADRON, *Primary Examiner.*

EDGAR W. GEOGHEGAN, *Examiner.*

I. C. COHEN, *Assistant Examiner.*