Jan. 14, 1964 C. I. TAYLOR 3,117,444

INJECTION NOZZLE TESTER

Filed April 24, 1961 3 Sheets-Sheet 1

Fig. 1.

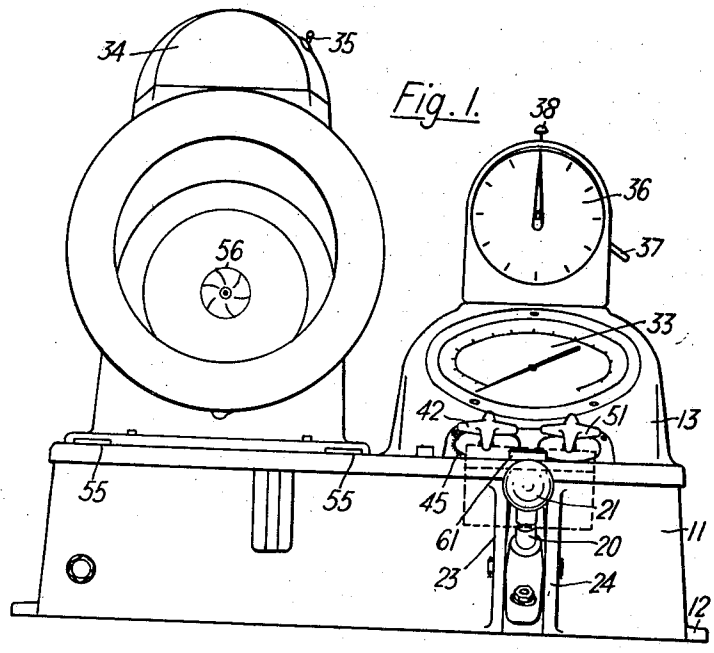

Fig. 2.

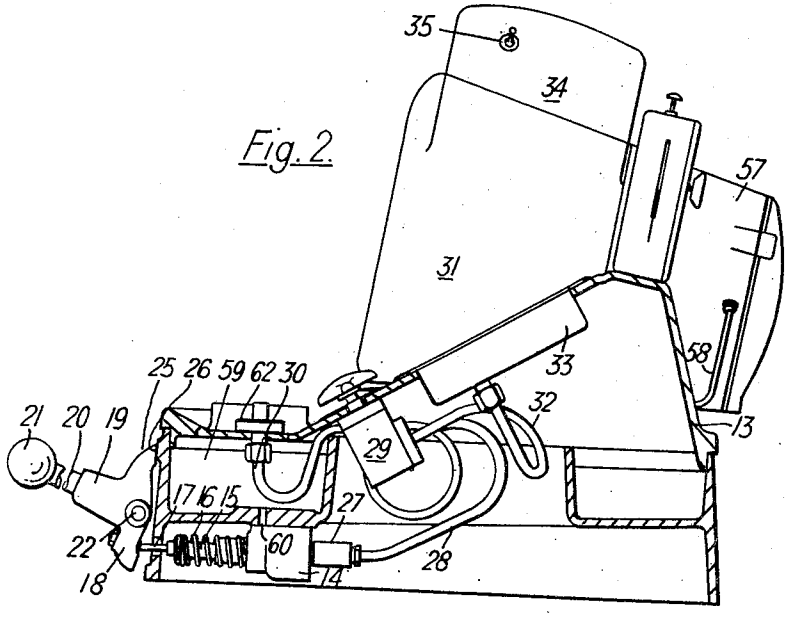

Inventor

CECIL I. TAYLOR

By Smirl & Smiley

Attorneys

Jan. 14, 1964 C. I. TAYLOR 3,117,444

INJECTION NOZZLE TESTER

Filed April 24, 1961 3 Sheets-Sheet 2

Fig. 3.

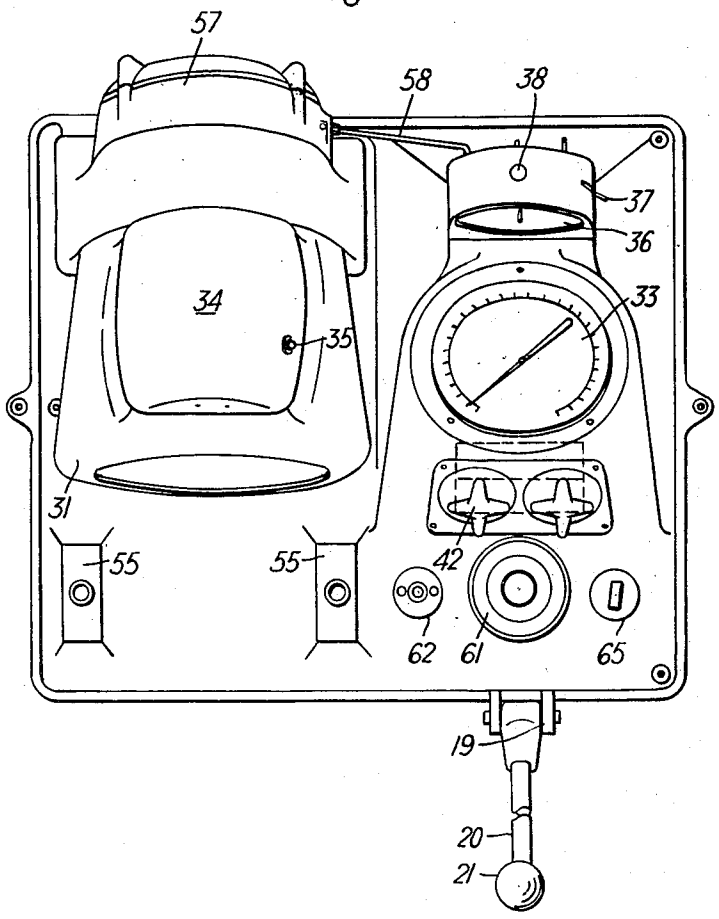

Inventor

CECIL I. TAYLOR

By Imirie & Smiley

Attorneys

Jan. 14, 1964 C. I. TAYLOR 3,117,444

INJECTION NOZZLE TESTER

Filed April 24, 1961 3 Sheets-Sheet 3

Fig. 4.

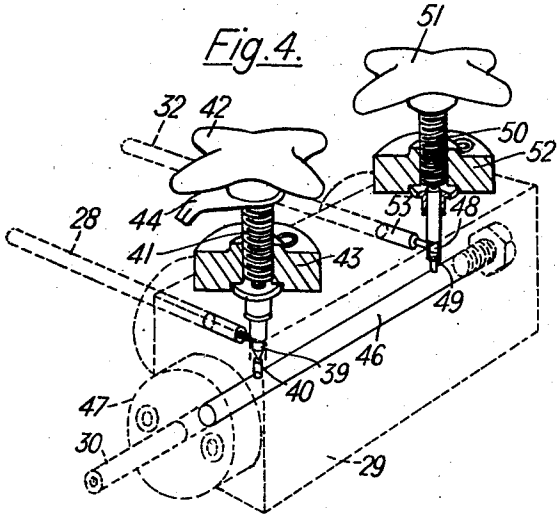

Fig. 5.

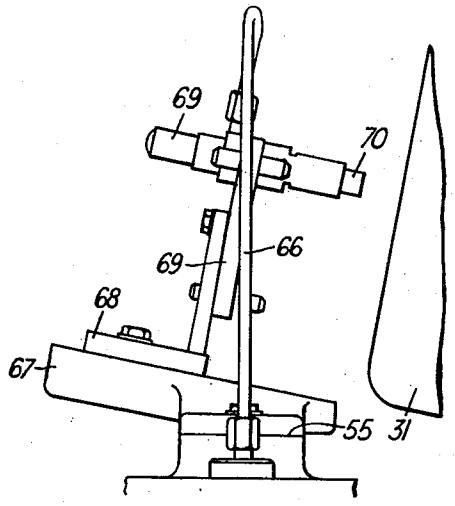

Inventor

CECIL I. TAYLOR

By Smith & Smiley

Attorneys

United States Patent Office

3,117,444

Patented Jan. 14, 1964

3,117,444

INJECTION NOZZLE TESTER

Cecil Isaac Taylor, Buckingham, England, assignor to Leslie Hartridge Limited, Buckingham, England, a British company

Filed Apr. 24, 1961, Ser. No. 105,110
Claims priority, application Great Britain Apr. 27, 1960
3 Claims. (Cl. 73—119)

This invention relates to testing apparatus for the injection nozzles of compression ignition internal combustion engines. Such apparatus normally comprises a manually operated pump by which liquid (usually fuel oil of the type used in the engines) is compressed and supplied through a duct to the injector to be tested, there being a pressure gauge connected to the injector to indicate the pressure at which the injector needle lifts to open the injector.

The conventional injector used in internal combustion engines comprises a body adapted to be mounted in the engine having an injection nozzle mounted at its end, the latter penetrating into the engine cylinder. The nozzle consists of a nozzle body containing a valve seat and one or more orifices through which the fuel is injected, and a needle having a conical valve portion which seats itself on the seating formed in the nozzle body. In use the needle is acted upon by a powerful spring which keeps it in position on the seating. When pressure is applied to the nozzle it acts on the portion of the valve cone above the seating and when the pressure rises above a predetermined level it lifts the needle, whereupon some of the fuel oil is forced past the seat and through the injection orifice or orifices. This lowers the pressure in the nozzle body and the needle tends to seat again. If the pressure is maintained at a high level (as when the pump piston is moving at high speed) then the needle is held open and the pressure is governed by the restriction imposed by the injection orifices, but if the pump piston is moving slowly then the escape of fuel allows the needle to fall back upon the seat, when the pressure again rises to lift the needle. The injector thus opens and closes very rapidly, and makes a buzzing noise. A good injector should "buzz" well.

In testing and setting nozzles information is required on four points, some of which are inter-related. The first is whether the needle makes a fluid-tight joint with the seating or whether it is leaky; the second is the amount of leakage between the needle diameter and the bore in the nozzle body in which it is located; the third is whether it will "buzz" well (a leaky nozzle will not "buzz" very well); and the fourth is the fuel pressure at which it will open. Information on the first point may be obtained by subjecting the nozzle to a fuel pressure just below that at which it will open, for a short period. If the seating is leaky then a droplet of fuel collects on the end of the nozzle. If such leakage takes place while the injector is operating in the engine the fuel which leaks is converted to carbon so that a thick deposit of carbon quickly builds up on the nozzle body and this interferes with the efficient operation of the engine. Assuming that the needle makes a fluid-tight joint on the seating, the leakage along the needle diameter may also be determined by applying a pressure just below the needle opening pressure to the

nozzle body and then holding the pump piston still. The rate at which the pressure in the system leaks away is a measure of the leakage along the needle diameter but since some fuel also leaks past the pump piston the test is not reliable in the known apparatus. If the leakage in the nozzle body is excessive then, in normal operation, the rate of pressure rise at each injection is slower than it should be and this again interferes with the satisfactory operation of the engine.

The "buzz" test is carried out by operating the pump very slowly so that the injector needle is allowed to reseat itself after each ejaculation of fuel oil. In the known apparatus the rapid fluctuations in pressure at the injector cause jerky movement of the pump lever.

The setting of the opening pressure is carried out by operating the pump extremely slowly, so that the pressure is gradually raised to the injector opening pressure, and noting the reading on the pressure gauge at which the needle lifts to allow an injection of fuel. It is most important that the pump should be operated slowly, and even so there is difficulty in noting the pressure reading because, as already mentioned, the pressure drops as soon as the needle opens. If the pump lever is operated a little too quickly then the pressure rises too rapidly to the opening pressure and the pressure gauge needle flies back and "judders" before the operator has been able to note its reading, so that he is left in doubt as to the exact pressure at which the nozzle opened.

One object of the present invention is to provide apparatus in which the above-mentioned tests may be carried out with certainty by a relatively unskilled operator.

Another object is to provide a simple and reliable injector testing apparatus.

A further object is to provide an injector testing apparatus in which two adjustable needle valves are provided, connected respectively between the pump and the injector and the injector and the pressure gauge, whereby the accurate testing and setting of injectors is facilitated.

Further objects and advantages of the invention will become evident from a reading of the following description of one form of apparatus according to the invention, having reference to the accompanying drawings in which:

FIGURE 1 is a front elevation of an injector nozzle tester;

FIGURE 2 is a sectional side elevation of the tester of FIGURE 1;

FIGURE 3 is a plan view of the tester of FIGURE 1;

FIGURE 4 is an enlarged "ghosted" view of the control valve block in the tester; and

FIGURE 5 is a side view of an injector support bracket showing an injector in position.

Referring to the drawings, the tester comprises a base 11, provided with lugs 12 by which it may be fixed to a bench, and a casing 13 forming a superstructure on which the controls, instruments and a hood for the injector nozzle under test are mounted. Contained in the base 11 is a high pressure pump comprising a cylinder 14, suitably attached to the base, co-operating with a piston 15 which is urged by a spring 16 to its outer position. The piston 15 has an extension 17 which is acted upon by an arm 18 of a bell crank, the other arm 19 of which has a lever 20 attached to it, terminating in a ball end 21. The bell crank is pivoted on a pin 22 supported in lugs 23 and 24 which are integral with the base 11. The bell crank has

a third arm 25 having a flat end which engages a face 26 on the base 11, the engagement limiting the outward movement of the piston 15 under the influence of the spring 16. The outlet 27 of the pump is connected by a pipe 28 to a block 29 which is shown in more detail in FIGURE 4 and will be more particularly described hereafter. For the present it will suffice to mention that fuel pumped through the pipe 28 passes through a first restrictor valve to an outlet from the block 29, and thence to the injector under test by a pipe 30. The injector is supported on a bracket (not shown in FIGURES 1, 2 or 3 but shown separately in FIGURE 5) bolted to facings 55 on the base. The injector is surrounded by a hood 31 to prevent the injector spray from being distributed over a large area. At the rear of the hood 31 is an extractor fan 56 to remove the spray and since the finely divided spray, intimately mixed with air, is highly inflammable the extractor fan is driven by an air-turbine 57 because an electric motor might produce sparks. The turbine 57 is supplied with compressed air through a pipe 58 and is controlled by means of a rotary control valve 65 mounted on the casing 13. The extractor, being of a centrifugal type also acts to condense the fuel oil, which is then returned through a pipe (not shown) to a reservoir 59 built into the base, from which it is supplied to the pump cylinder 14 through a duct 60. The reservoir is initially filled through a filler cap 61.

Fuel supplied to the block 29, after passing through the first restrictor valve, may also pass through a second restrictor valve and into a pipe 32, which leads to a pressure gauge 33 mounted on the superstructure 13. The hood 31 includes an upper domed portion 34 containing a lamp, controlled by a switch 35, which may be switched on when desired in order to obtain a better view of the spray or any droplets which may form at the nozzle end during the seat leakage or "dry seat" test.

Above the pressure gauge 33 is a stop clock 36 which may be started and stopped by a lever 37 and set to zero by means of a button 38. The stop clock enables the time required for the pressure to fall from one level to another (leakage test) or the time during which pressure is maintained, to be accurately determined.

The control block 29 previously referred to comprises, as shown in FIGURE 4, an inlet connection by which fuel oil from the pump may be supplied via the pipe 28 to a needle type restrictor valve 39, co-operating with a seating 40. The needle valve is connected to a screw-threaded stem 41 having a knob 42 at its end, the screw-threaded stem passing through a nut 43 attached to the block 29. A pointer 44 is attached to the knob 42 and co-operates with a graduated scale 45 (FIGURE 1) by which the setting of the needle valve 39 may be determined.

Fuel oil passing through the needle valve 39 enters a duct 46 in the block 29 which communicates with the pipe 30 leading to the injector. The pipe 30 is held in position on the block 29 by a fitting 47, and its other end is connected to a fitting 62 which passes through the casing 13. A further pipe 66 (FIGURE 5) is connected between the last-mentioned fitting and the injector on test. The bracket fitted to the facings 55 and the pipe connection to the injector must, of course, be suited to the particular injector being tested and several types may be necessary to cover all the different kinds of injector which may require testing. A typical bracket is shown in side view in FIGURE 5 and consists of a base portion 67 and a support portion 68 which carries a plate of suitable size and shape to accept an injector body 69 and nozzle 70 to be tested.

Fuel oil in the duct 46 also passes a second needle valve 48 co-operating with a seating 49. The needle valve 48 is controlled by a second threaded stem 50 similar to the stem 41 and is operable by a second knob 51 similar to the knob 42. The threaded stem 50 passes through a nut 52, similar to the nut 43. Fuel oil passing the valve 49 enters a duct 53 which is connected to the pipe 32 (shown dotted in FIGURE 4) leading to the pressure gauge 33.

When an injector is to be tested it is mounted in the tester and the pump, consisting of piston 15 operating in cylinder 14, is actuated by moving the lever 20 downwards, when fuel oil is forced into the block 29 and through the block to the pressure gauge and the injector. By screwing down the needle valve 39 to the appropriate degree a restriction is imposed on the flow of fuel oil from the pump such that the operator is compelled to operate the lever 20 slowly. Consequently the pressure at the injector rises slowly.

In order to carry out a "dry seat" test the pump pressure is raised to a level just below that at which the injector would normally open and the needle valve 39 is then screwed down completely, to close it. In this way the pressure in the system is trapped and it is easy to note whether the needle seat leaks and allows a droplet of fuel oil to form on the end of the nozzle. If no such leakage takes place in a prescribed time then the needle valve 39 may be re-opened slightly while the pressure is restored to the original figure, by operation of the pump, and the needle valve 39 is again closed, the stop clock 36 being started at the same instant. The operator watches the pressure gauge until the pressure falls by a predetermined amount and then stops the clock 36. He then has an accurate record of the rate of leakage along the injector needle diameter, since this is related to the time which has been recorded.

To carry out the "buzz" test the restrictor valve 39 is set to impose a substantial restriction on flow. The operator is thus compelled to move the pump lever slowly and the rapid fluctuations of pressure at the injector do not cause jerky movement of the pump lever.

To set the injection pressure the restrictor valve 39 is set to an almost closed position and the pump is operated to raise the pressure up to the injection pressure. Since the pressure at the injector rises very slowly it is possible to see the exact pressure reading at which the injector needle lifts to allow injection, and appropriate adjustments are made to the injector spring to set the injector to the desired opening pressure. The pointer 44, in conjunction with the graduations 45, facilitate the accurate setting of the valve 39.

During all these operations the flow of fuel oil to and from the pressure gauge 33 may be controlled by operation of the needle valve 48 by means of the knob 51. For example, during the "dry seat" and leakage tests the needle valve 48 may be opened to such an extent that the pressure gauge follows the injector pressure instantly. During the "buzz" test the needle valve 48 is preferably closed because the Bourdon tube in the pressure gauge would not only be subjected to violent pressure fluctuations which might cause damage to it, but its flexibility will give rise to pressure waves which may interfere with the test.

When the injector opening pressure is being tested the needle valve 48 is preferably set to an almost closed position so that the pressure gauge needle accurately follows the very slow rise in pressure but cannot follow the sudden drop in pressure when the injector needle opens. This not only helps to prevent damage to the pressure gauge but enables the operator to see more clearly the exact pressure at which the injector opens.

I claim:

1. Apparatus for testing injectors and injector nozzles of compression ignition internal combustion engines comprising a base, a hand-operated pump mounted in said base, a casing on said base, a pressure gauge mounted on said casing, two manually-operable restrictor valves in a valve block supported on said casing, a support for an injector and nozzle to be tested carried on said casing, a duct in said block communicating with one side of each of said restrictor valves, a pipe connecting said duct to said injector, a pipe connecting said pump to the other

side of one of said restrictor valves, and a further pipe connecting said pressure gauge to the other side of the other of said restrictor valves.

2. Apparatus as claimed in claim 1 comprising a lamp incorporated in said hood to illuminate said injection nozzle during test.

3. Apparatus as claimed in claim 1 comprising a pointer on at least one of said restrictor valves co-operating with graduations whereby the setting of said one restrictor valve is indicated.

References Cited in the file of this patent

UNITED STATES PATENTS

2,183,189	Gormley	Dec. 12, 1939
2,517,766	Cole	Aug. 8, 1950
2,629,255	Hartridge	Feb. 24, 1953
2,744,407	Kruger et al.	May 8, 1956