Sept. 12, 1944. H. TREES ET AL 2,357,858

ELECTRICAL CONNECTOR

Filed Oct. 24, 1942 2 Sheets-Sheet 1

FIG. 1

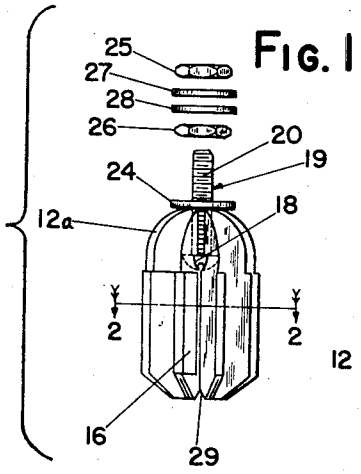


FIG. 2

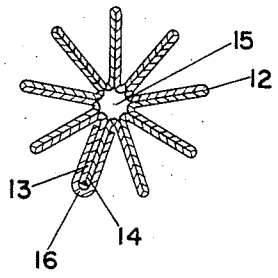


FIG. 3

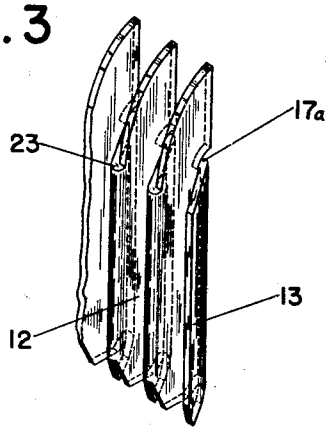


FIG. 4

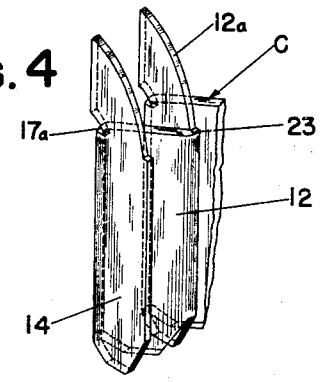


FIG. 5

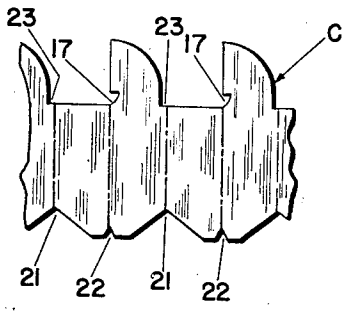


INVENTORS

Harry Trees

Charles E. Morris

By William D. Hall

and S. S. Baker

ATTORNEYS

Sept. 12, 1944. H. TREES ET AL 2,357,858

ELECTRICAL CONNECTOR

Filed Oct. 24, 1942 2 Sheets-Sheet 2

FIG. 6

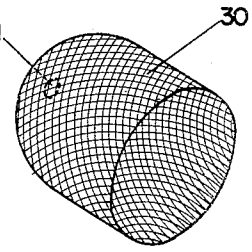


FIG. 7

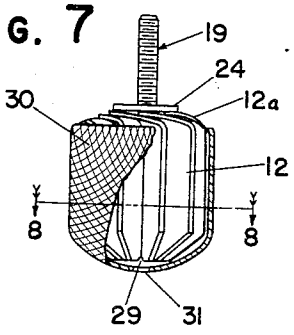


FIG. 8

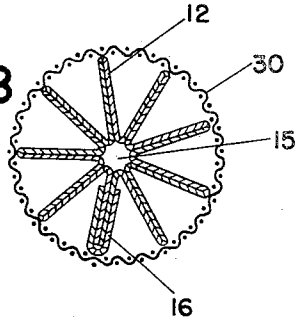


FIG. 9

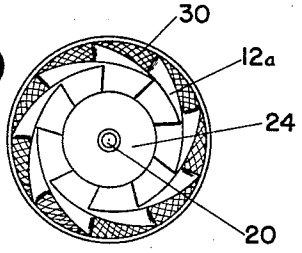


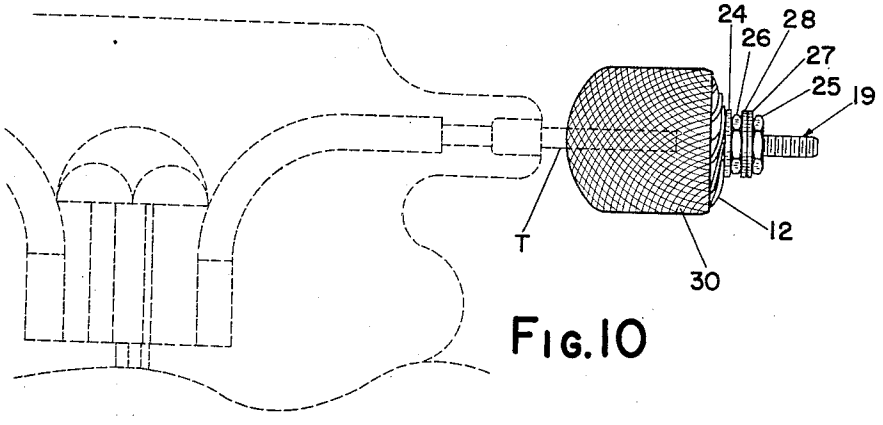


FIG. 10

INVENTORS.
Harry Trees
Charles E. Morris
By William B. Hall
and S. S. Baker
ATTORNEYS

Patented Sept. 12, 1944

2,357,858

# UNITED STATES PATENT OFFICE

2,357,858

## ELECTRICAL CONNECTOR

Harry Trees, Long Branch, and Charles E. Morris, Elberon, N. J.

Application October 24, 1942, Serial No. 463,200

10 Claims. (Cl. 173—324)

(Granted under the act of March 3, 1883, as amended April 30, 1928; 370 O. G. 757)

The invention described herein may be manufactured and used by or for the Government for governmental purposes, without the payment to us of any royalty thereon.

This invention relates to electrical connectors and more particularly to connectors for application to a terminal of an electrical device such as an electronic tube for the purpose of effecting a connection between the terminal and a lead therefrom.

In electronic tubes of the type wherein high plate voltages are employed, considerable heat usually is developed. The development of these high temperatures often results in serious damage to or failure of the tube, for example, by destruction of the original seal between the terminal pin and the tube envelope, or other damage due to distortion or warping of the tube elements. It is therefore desirable to provide means for dissipating the heat thus generated in order to avoid the adverse effects thereof, and the present invention embodies such means.

Another desirable characteristic of such connectors arises from the fact that the high voltage electronic tubes referred to, are ordinarily principal components of radio apparatus such as transmitters. When such an apparatus is in use, it is obvious that its operation should not be subjected to long interruptions due to failure of a component part. It is essential, therefore, that the terminal connectors be of such nature as to be easily removable and replaceable in order to insure against delay when failure of the tube makes rapid replacement necessary.

An additional factor of importance to be taken into consideration is the reaction of the connector to high voltages. If the outer surface of the connector were to be formed with small radii of curvature, such as sharp projections or angularities about its periphery, dangers of corona discharge would be encountered. Corona discharge represents a form of electrical breakdown and power loss when the voltage between conductors becomes sufficiently great to cause its formation. Increasing the radii of curvature of such conductors contributes to its prevention, and the connector should be designed to meet these difficulties under conditions where its occurrence is likely. It is apparent that should the heat dissipating means take the form of simple cooling fins, the inherent surface curvature of such heat dissipating means would lend itself to corona discharge.

The solution of the above problems without undue complexity of construction, such as forced draft cooling arrangements, is desirable and the present invention provides a simply constructed connector which not only effects the desired results in a simplified manner, but which, moreover, provides additional advantages such as the accomplishment of good electrical contact under varying heat conditions, as well as increased life of the connector effected by its inherent mode of operation.

The invention is illustrated and explained in connection with the accompanying drawings, in which:

Figure 1 is an elevational view of the connector with certain parts separated.

Figure 2 is a slightly enlarged cross section taken on the line 2—2 of Figure 1.

Figure 3 is a fragmentary perspective view of one end of the body of connector before being rolled into its ultimate form.

Figure 4 is a perspective view similar to Figure 3 and illustrating the other end thereof.

Figure 5 is a fragmentary plan view, serving to show a typical pattern of a unitary strip which produces the body of the connector.

Figure 6 is a perspective view of a screen which may be used in a modification of the invention.

Figure 7 is an elevational view of a connector provided with a screen, partly broken away.

Figure 8 is a slightly enlarged cross section of the composite connector of Figure 7 taken on the line 8—8 thereof, with the broken away portion replaced.

Figure 9 is a top view of the composite connector illustrated in Figure 7, with the broken away portion replaced.

Figure 10 is an elevational view illustrating the application of the composite connector to an exposed terminal pin of an electronic tube.

The body of the connector may be formed from a strip of thin sheet metal which is shaped to the desired configuration. Figure 5 shows a typical pattern which may be produced by a suitable die cutting and stamping machine. The metal employed may be any electrically conductive material, such as copper, a nickel plate thereon being recommended for protection against corrosive effects.

A copper strip C, having been thus cut, is fed to the stamping dies which form the strip into corrugated and folded fins 12, the folds thereof occurring at the broken lines illustrated in Figure 5. The copper strip thus treated is then rolled to bring the ends 13, 14 thereof into contacting relationship whereby the connector is given a stellate cross-sectional shape, the fins

thereby defining a longitudinal aperture 15 along the longitudinal axis of the connector. A separate folding operation may be required to press the strip into pairs of folded fins as illustrated in Figures 1 and 2. The formation of the folded pairs of fins illustrated, is desirable since a springy quality is lent thereto, whereby the subsequent introduction of a rigid external electrode terminal into the aperture 15 expands the said aperture in opposition to the spring effect of the folded fins 12.

The ends 13 and 14 of the finned strip C form a pair of fins when clamped together by a clip 16, as shown in Figure 2. The aperture 15 is preferably defined by rolling the finned strip about a mandrel, not shown, drawing the ends 13 and 14 together, applying the clip 16 to securely connect these ends 13 and 14, and thereafter removinge the mandrel.

The particular size of mandrel used will depend on the size of the aperture desired. The use of a mandrel smaller in diameter than the diameter of the terminal to which the connector is to be applied is preferred, since the expansion of the aperture 15 obviously depends upon the insertion therein of a terminal of larger diameter than said aperture.

Citing an example of the formation of a specific conductor, where the diameter of an electrode terminal of an electronic tube was .059", a mandrel of .055" was employed. After application of the clip 16 and removal of the mandrel, the aperture was further reduced to .050". This was considered as satisfactory, effecting as it did a good connection with the terminal.

Referring to Figure 5, the notches 17 cooperate in the formed connector to define a domeshaped cavity for the purpose of retaining the domeshaped head 18 of a bolt 19. The bolt 19 serves to secure thereto a lead to which the terminal of the tube is to be electrically connected, the exposed outer end of the shank 20 of the bolt 19 serving to provide a convenient connecting post. The application of the clip 16 tightens the domeshaped cavity about the head 18 to secure the bolt 19 in place. Figures 3 and 4 have notches 17*a* performing the same function as notches 17 in Figure 5, but illustrating an adaptation thereof to another type of bolt head.

Notches 21 lend a beveled effect to the aperture end of the connector while the smaller notches 22 provide a chamfered edge for the mouth of said aperture 15, permitting smooth and unimpeded application of the connector over an electrode terminal to which it is to be applied. Shoulder portions 23 serve to weaken the top ends 12*a* of the folded fins so that they may be more easily bent over each other in overlapping relationship when this is desired as will be hereinafter explained. A washer 24 may be permanently connected as by solder over the bolt 19. Nuts 25 and 26, and washers 27 and 28 complete the assembly. The lead to which the terminal is to be electrically connected, is received on the shank 20 of bolt 19 between the washers 27 and 28.

The above described connector is a completely operative structure, the fins of which will dissipate heat as it is generated on the electrode terminal of the tube. Its mode of application to an electronic tube is obvious, the chamfered mouth 29 of the aperture 15 being applied over an electrode terminal. The expansion of the aperture will be opposed by the folds of fins 12, the sides of the folds diverging in response to internally applied pressure against the walls of the aperture 15. In this way a satisfactory electrical contact may be effected, the spring effect being automatically secured by virtue of the folded fins 12.

While the use of a separate spring has been dispensed with, the construction hereinbefore described, is actually far superior to a separate spring. The use of a separate spring in connectors of this type would present various difficulties besides those of assembly. Extreme heat would influence the temper of the spring and in time render it useless. However, in the instant construction, the spring effect results from the fin structure itself, which is inherently of a heat dissipating nature so that as a spring, the connector preserves its own temper. The elastic effect, moreover, is well distributed throughout the aperture and the expansion thereof is uniform in all directions, resulting thereby in better electrical contact.

Whereas the ordinary connector loosens in time, it was found in actual practice that the connector above described made a more efficient contact during use than it had made at the time of application. This desirable increase of frictional contact appeared to have been attributable to the expansion under heat of the electrode terminal of the tube, whereas the self-cooling spring aperture 15 tended to maintain its original dimensions.

Another advantage of the connector is its tendency to wipe the electrode terminal clean during each application or removal, the springlike quality of the aperture 15 effecting this result.

The connector has particular advantage in high frequency circuits. In heat dissipating connectors heretofore used, the fins have often comprised stacked layers. Such an arrangement appears to impede the flow in the electrical circuit due to inductive reactance whereas by forming the fins substantially parallel to the longitudinal axis of the connector, any such inductive effects will be eliminated.

The connector, as above described, performs satisfactorily under conditions wherein about 500 or less volts are encountered. With higher voltage, particularly those ranging into the thousands of volts, dangers of corona discharge are met.

As above stated, the occurrence or extent of corona discharge from a conductor depends upon the radius of curvature of that conductor. If the conductor is pointed or angular, the dangers of corona discharges are amplified. In order to avoid corona in high voltage apparatus, large radii of curvature should be used. The embodiment of the connector as above described, may, when high voltages are employed, be subject to losses occasioned by corona discharge, since the fins present sharp edges, offering many points from which corona discharge may take place. Accordingly, for improved operation in high voltage work, a modification of the connector is provided. This modification comprises the addition of a mesh screen 30, which may be of similar material to that of the connector. In the modification, the top ends, 12*a* of the fins may be uniformly depressed in overlapping relation. The weakening shoulders 23 assist in this operation so that this end of the connector will not constitute a source of pointed projections from which corona discharge can take place and the screen 30 is applied over the connector as illustrated in

Figure 7. The screen may be soldered to the connector at accessible points, preferably in the region of washer **24** and the depressed top ends of the fins. The mesh screen, being of electrically conductive material, will serve to distribute over its area an electrostatic field around the connector, caused by a potential difference between the fins and another point in the area thereof. Since it is the intensity of this electrostatic field that is the cause of corona discharge, the screen lessens the danger of corona discharge by distributing the field and decreasing its intensity in any one place. Otherwise stated, the mesh screen provides the connector with a surface having a much higher radius of curvature. After its application to a connector of the type described, an opening **31** is formed therein to communicate with the aperture **18** so that the composite connector may be applied to the electrode terminal T of an electronic tube as illustrated in Figure 10.

It is obvious that any expedients adopted for the purpose of preventing corona discharge should not substantially impair the utility of the connector as a heat dissipator. The mesh screen, however, being air-permeable, permits ventilation of the fins by the surrounding air, while performing its own functions of an electrostatic field distributor. The use of simple cooling fins is thus made possible under conditions of high voltage, in spite of the fact that the inherent surface curvature of such heat dissipating means lends itself to corona discharge.

The connector, whether in its simple or composite form, is of extremely simple construction, but its results are comparable to and in some respects more efficient than connectors of much greater complexity. The connector is easily removable in the event that failure of a tube necessitates its immediate removal and replacement. It is capable of use in environments other than radio and as many may be used as there are terminals which require them.

While we have shown and described certain presently preferred embodiments of the invention, it is to be understood that the invention, may be otherwise embodied within the spirit thereof and within the scope of the appended claims.

We claim:

1. A connector for an electrical device having an electrode terminal, comprising a series of integral fins folded and radially disposed so as to have a stellate cross sectional shape, means connecting the end fins of said series so as to maintain them radially disposed, said fins being arranged so as to define a centrally disposed longitudinal aperture for receiving said terminal of said electrical device, said aperture being expansible in opposition to the action of said folded fins whereby firm contact may be maintained between said terminal and said aperture.

2. A connector for an electrical device having an electrode terminal to be connected to a lead, comprising a series of fins radially disposed so as to have a stellate cross-sectional shape, said connector having a longitudinal aperture formed by said fins centrally thereof for receiving a terminal of said electrical device, a headed bolt for receiving a lead to which said terminal is to be connected and by fins mounted thereon, and means in said aperture to retain the head of said headed bolt and said fins in engagement.

3. A connector for an electrical device having an electrode terminal to be connected to a lead, said connector comprising a series of integral fins, folded and radially disposed so as to have a stellate cross-sectional shape, said connector being formed with a longitudinal aperture for receiving through one end thereof said electrode terminal, a headed bolt received through the other end thereof for receiving a lead to which said terminal is to be electrically connected, means in said aperture to retain the head of said headed bolt and means connecting the end fins of said series so as to maintain them radially disposed and to firmly retain the head of said headed bolt in said aperture.

4. A connector for an electrical device having an electrode terminal, comprising a series of integral and folded fins arranged so as to have a stellate cross-sectional shape, said connector having a longitudinal aperture formed centrally thereof for receiving a terminal of said tube, said aperture being expansible in response to outward pressure against the walls thereof by a terminal of said electrical device, the expansion being effected in opposition to the action of the folds of said fins.

5. A connector for an electrical device having an electrode terminal comprising a series of integral fins folded in pairs and radially disposed so as to have a stellate cross-sectional shape, said fins being parallel to the axis of the connector and being arranged to define a centrally disposed longitudinal aperture for receiving said terminal of said electrical device, said aperture being expansible in response to outward pressure against the walls thereof by said terminal of said electrical device, the expansion being effected in opposition to the action of the folded fins and a bolt retained at one end thereof within said aperture, the other end thereof protruding from said aperture and serving to receive a lead to which said terminal is to be electrically connected.

6. A connector for an electrical device having an electrode terminal, comprising a series of fins radially disposed so as to have a stellate cross-sectional shape and being arranged so as to define a centrally disposed aperture for receiving said terminal of said electrical device, and a mesh screen of electrically conductive material electrically connected to said fins for distributing over the area of said screen an electrostatic field around said connector caused by a potential difference between said fins and another point in the area thereof.

7. A connector for an electrical device having electrode terminals comprising a series of integral fins radially disposed so as to have a stellate cross-sectional shape and arranged to define a centrally disposed longitudinal aperture for receiving a terminal of said electrical device, said fins being arranged parallel to the longitudinal axis of the connector and a mesh screen of electrically conductive material electrically connected to said fins for distributing over the area of said screen an electrostatic field around said connector caused by a potential difference between said fins and another point in the area thereof.

8. A connector for an electrical device having electrode terminals comprising a series of integral fins folded and radially disposed so as to have a stellate cross-sectional shape, said fins being arranged so as to define a centrally disposed longitudinal aperture for receiving a terminal of said electrical device, said aperture being expansible in opposition to the action of said folded fins whereby firm contact may be maintained between said terminal and said aperture and a mesh screen of electrically conductive ma-

terial electrically connected to said fins for distributing over the area of said screen an electrostatic field around said connector caused by a potential difference between said fins and another point in the area thereof.

9. A frictionally engaging, heat dissipating connector having a relatively rigid body portion adapted to be normally engaged with one of the conductors to be connected, and a resilient body portion carried by said rigid body portion and formed of a relatively thin strip of metal bent into radially extending arms terminating short of and defining a central longitudinally extending cavity into which the end of the other of the conductors to be connected may be inserted and yieldingly held by the resiliency of the walls formed of said strip.

10. A frictionally engaging, corona preventing heat dissipating connector having a relatively rigid body portion adapted to be normally engaged with one of the conductors to be connected, a resilient body portion carried by said rigid body portion and formed of a relatively thin strip of metal bent into radially extending arms terminating short of and defining a central longitudinally extending cavity into which the end of the other of the conductors to be connected may be inserted and yieldingly held by the resiliency of the walls formed of said strip, and a shield of open mesh, metallic material encompassing the outer ends of said arms and the opposite end of said resilient body portion from said rigid body portion and providing access to the open end of said cavity.

HARRY TREES.
CHARLES E. MORRIS.