(19) Europäisches Patentamt
European Patent Office
Office européen des brevets

(11) Publication number: **0 330 848 B1**

(12) # EUROPEAN PATENT SPECIFICATION

(45) Date of publication of patent specification: **31.08.94** (51) Int. Cl.5: **C04B 35/58**

(21) Application number: **89101641.2**

(22) Date of filing: **31.01.89**

(54) **Heat-conductive aluminium nitride sintered body and method of manufacturing the same.**

(30) Priority: **08.02.88 JP 28270/88**

(43) Date of publication of application:
06.09.89 Bulletin 89/36

(45) Publication of the grant of the patent:
31.08.94 Bulletin 94/35

(84) Designated Contracting States:
DE FR GB IT

(56) References cited:
EP-A- 0 147 101
EP-A- 0 266 277
EP-A- 0 276 149
EP-A- 0 286 690
DE-A- 3 627 317
DE-A- 3 800 749

SOLID STATE TECHNOLOGY vol. 29, no.10, October 1986, pages 135-138, Port Washington, NY, USA; N. IWASE et al.:"Aluminium Nitride Substrates Having High Thermal Conductivity" page 136, "Conductor Forming Technology"

(73) Proprietor: **SUMITOMO ELECTRIC INDUSTRIES, LTD.**
5-33, Kitahama 4-chome,
Chuo-ku
Osaka-shi, Osaka 541 (JP)

(72) Inventor: **Yamakawa, Akira**
Itami Works of Sumitomo Electric Industries, Ltd.
1-1 Koyakita 1-chome Itami-shi Hyogo-ken (JP)
Inventor: **Miyake, Masaya**
Itami Works of Sumitomo Electric Industries, Ltd.
1-1 Koyakita 1-chome Itami-shi Hyogo-ken (JP)
Inventor: **Sakanoue, Hitoyuki**
Itami Works of Sumitomo Electric Industries, Ltd.
1-1 Koyakita 1-chome Itami-shi Hyogo-ken (JP)
Inventor: **Tekeuchi, Hisao**
Itami Works of Sumitomo Electric Industries, Ltd.
1-1 Koyakita 1-chome Itami-shi Hyogo-ken (JP)
Inventor: **Sogabe, Koichi**
Itami Works of Sumitomo Electric Industries, Ltd.
1-1 Koyakita 1-chome Itami-shi Hyogo-ken (JP)

Note: Within nine months from the publication of the mention of the grant of the European patent, any person may give notice to the European Patent Office of opposition to the European patent granted. Notice of opposition shall be filed in a written reasoned statement. It shall not be deemed to have been filed until the opposition fee has been paid (Art. 99(1) European patent convention).

EP 0 330 848 B1

Inventor: **Sasame, Akira**
Itami Works of Sumitomo Electric Industries, Ltd.
1-1 Koyakita 1-chome Itami-shi Hyogo-ken (JP)

(74) Representative: **Kirschner, Klaus Dieter, Dipl.-Phys. et al**
Patentanwälte
Herrmann-Trentepohl, Kirschner, Grosse, Bockhorni & Partner
Forstenrieder Allee 59
D-81476 München (DE)

Description

The present invention relates to a heat-conductive aluminum nitride sintered body and a method of manufacturing the same, and more particularly, it relates to a dense heat-conductive aluminum nitride sintered body which has excellent characteristics such as heat conductivity, insulationability and permittivity, and a method of manufacturing the same.

Technique relating to a large scale integrated circuit (LSI) has been remarkably advanced in recent years, particularly with improvement in circuit density. Increase in chip size of a semiconductor integrated circuit (IC) also contributes to such improvement in circuit density, and calorific power of a package for carrying an IC chip is increased with such increase in IC chip size. Thus, importance has been attached to heat radiation of a material for an insulator substrate, which is applied to a package for a semiconductor device or the like. Such an insulator substrate is generally prepared from alumina (Al_2O_3). However, with small thermal conductivity of 30 W/mK, alumina is inferior in heat dissipation in contrast to excellence in electrical insulability and mechanical strength, and hence it is inadequate to carry a field-effect transistor (FET) of high calorific power or the like on an alumina substrate. Although there is an insulator substrate which is prepared from beryllia (BeO) having high thermal conductivity for carrying a semiconductor element of high calorific power, safety measures for using such a substrate are complicated since beryllia is toxic.

With respect to such an insulator substrate for carrying a semiconductor element of high calorific power, therefore, heat-conductive aluminum nitride (AlN), which is intoxic and equivalent in electrical insulability and mechanical strength to alumina, has been recently watched as an effective insulating material for a semiconductor device or a package.

As hereinabove described, aluminum nitride theoretically has high thermal conductivity and insulability as a monocrystal material. However, since powder of aluminum nitride itself is inferior in degree of sintering, relative density of a sintered body prepared by forming such aluminum nitride powder and sintering the same is about 70 to 80 % at the most with reference to theoretical density of aluminum nitride of 3.26 g/cm^3, depending on sintering conditions, while the sintered body contains a large amount of pores. Therefore, it is difficult to densify an aluminum nitride sintered body by independently employing aluminum nitride powder.

In an insulating ceramics member such as an aluminum nitride sintered body, thermal conduction is performed mainly through phonon conduction. Thus, phonon scattering is caused by defects such as pores, impurities etc. contained in the sintered body, to reduce the level of its thermal conductivity. In order to obtain an aluminum nitride sintered body having high thermal conductivity, various proposals have been made as follows:

(1) Japanese Patent Laying-Open Gazette No. 96578/1985, for example, discloses a method of adding Y_2O_3, serving as a sintering assistant and a deoxidizer, to aluminum nitride powder and sintering the same.

(2) Each of Japanese Patent Laying-Open Gazettes Nos. 71576/1985 and 155263/1986, for example, discloses a method of adding carbon to aluminum nitride powder and sintering the same for deoxidation, thereby to obtain a sintered body having a small content of oxygen.

(3) Each of Japanese Patent Laying-Open Gazettes Nos. 71575/1985 and 127267/1985, for example, discloses a method of employing high purity aluminum nitride powder having a small content of oxygen.

(4) Japanese Patent Laying-Open Gazette No. 41766/1987, for example, discloses a method of decomposing/evaporating a sintering assistant remaining in a sintered body, to obtain an aluminum nitride sintered body of high purity.

(5) Proceeding for 1987 Yogyo Kyokai's Annual Meeting p. 969, for example, discloses a method of removing a sintering assistant remaining in a sintered body by exposing the same to a reducing atmosphere for a long time.

In the method (1) of adding Y_2O_3 and performing ball-mill mixing, it is necessary to add at least 1 percent by weight of Y_2O_3 in order to obtain a dense heat-conductive sintered body. However, thermal conductivity of a sintered body thus obtained is about 200 W/mK at the most, and dispersion thereof is significant. If a large amount of Y_2O_3 is added, thick intergranular phases are formed around aluminum nitride particles, to reduce oxidation resistance of the sintered body while increasing permittivity.

The method (2) is directed to reduce the amount of oxygen contained in aluminum nitride through a deoxidizing action of carbon. However, when no sintering assistant is added, the sintered body has low thermal conductivity of about 80 W/mK since it is difficult to densify the sintered body having low density, as disclosed in Japanese Patent Laying-Open Gazette No. 71576/1985. If Y_2O_3 is to be added as a sintering assistant as disclosed in Japanese Patent Laying-Open Gazette No. 155263/1986, it is necessary

to add at least 1 percent by weight of Y_2O_3 in order to densify the sintered body.

According to Japanese Patent Laying-Open Gazette No. 71575/1985 listed in the item (3), the amount of oxygen contained in the sintered body is at least 0.5 percent by weight while the sintered body has low thermal conductivity of about 40 W/mK, even if aluminum nitride powder of high purity is employed as a raw material. As shown in Japanese Patent Laying-Open Gazette No. 127267/1985, further, thermal conductivity of a sintered body obtained by adding at least 3 percent by weight of Y_2O_3 is about 70 W/mK.

As hereinabove described, an aluminum nitride sintered body obtained by adding a small amount of sintering assistant has low thermal conductivity in the existing circumstances.

According to the method (4) or (5) of adding a large amount of sintering assistant, sintering the material and thereafter removing the sintering assistant, on the other hand, it is assumed that an aluminum nitride sintered body thus obtained has high thermal conductivity exceeding 200 W/mK with improvement in permittivity etc. However, according to a method of removing the sintering assistant by adding a fluoride, a sintering furnace is inevitably contaminated and dispersion in characteristic of a sintered body thus obtained is increased not only in a lot but in the same sintered body, as shown in Japanese Patent Laying-Open Gazette No. 41766/1987. Further, the face of the sintered body is so roughened that after treatment is inevitably required for employment, because of irregularity caused by evaporation/volatilization of the sintering assistant. According to the method of sintering the material in a reducing atmosphere for a long time as disclosed in Proceeding for 1987 Yogyo Kyokai's Annual Meeting, the cost required for such sintering is extremely increased while the sintering assistant segregates in the sintered face of the sintered body. Thus, the sintered body cannot be directly employed with such a sintered face, while the same has large dispersion in characteristic.

DE 36 27 317 relates to a sinterable aluminum nitride composite and a sintered body made of this composite as well to a producing method providing the sintered body. The sintered body disclosed thereby contains in particular aluminum nitride particles with an average particle size of at most 3 µm and preferably of 0.3 to 2 µm.

In SOLID STATE TECHNOLOGY (29, October 1986, page 12) there are described by N. Iwase et al. the thermal properties of aluminum nitride sintered bodies and their practical applications as heat conducting members.

EP 0 266 277 represents a prepublished patent application concerning a sintered body of aluminum nitride and a process for producing the same. Grain boundary of this sintered body consist mainly of $GaAlO_3$ and Ga_2O_3. The thermal conductivity provided by this sintered body is about 150 W/mK.

An object of the present invention is to solve the aforementioned various technical problems of the prior art, and to provide a heat-conductive aluminum nitride sintered body which has high purity, high density and high thermal conductivity, and a method of manufacturing the same.

As the result of various studies, the present invention provides aluminum nitride ceramics of high density having thermal conductivity of at least 180 W/mK and containing an extremely small amount of sintering assistant in grain boundaries of aluminum nitride. The inventors have found that, upon homogeneous distribution of aluminum nitride intergranular phases, recrystallization of aluminum nitride so progresses as to attain high density and high thermal conductivity while reducing the amount of oxygen, which is contained in the sintered body as an impurity, to be not more than 0.5 percent by weight, due to presence of a substance reducing surface free energy of aluminum nitride particles.

A heat-conductive aluminum nitride sintered body according to the present invention is characterized by the features of the appended claim 1.

Examples of rare earth elements are scandium, yttrium and lanthanoid series elements such as lanthanum, cerium, praseodymium, neodymium, promethium, samarium, europium, gadolinium, terbium, dysoprosium, holmium, erbium, thulium, ytterbium and lutetium.

If the content of the rare earth element is not more than 0.01 percent by weight, it is difficult to densify the sintered body while the content of oxygen is increased to reduce thermal conductivity. If the content of the rare earth element exceeds 1.0 percent by weight, permittivity is increased and oxidation resistance is reduced although the sintered body has thermal conductivity of about 200 W/mK.

The general assumption that a dense sintered body can be obtained with a content of a rare earth element of at least 1 percent by weight is considered to be because a rare earth element has been generally added/mixed in the form of an oxide, a hydroxide or the like to be insufficiently mixed with aluminum nitride powder. In other words, it may be considered that a dense sintered body having high thermal conductivity can be obtained according to the present invention by adding/mixing dense particles containing a rare earth element in the form of a compound such as stearic acid, even if the amount of the rare earth element, serving as a sintering assistant, is not more than 1 percent by weight.

Figs. 2A and 2B are typical diagrams showing finely mixed states of aluminum nitride particles 201 and sintering assistant particles 203. Fig. 2A shows such a conventional mixed state that relatively large sintering assistant particles 203 are left between the aluminum nitride particles 201, as the result of insufficient mixing of the aluminum nitride particles 201 and the sintering assistant particles 203. On the other hand, Fig. 2B shows such a mixed state according to the present invention that fine sintering assistant particles 203 are adhered to the surfaces of the aluminum nitride particles 201 to achieve homogeneous mixing.

The amount of oxygen contained in a sintered body exerts significant influence on thermal conductivity of the sintered body. Therefore, the amount of oxygen contained in the inventive aluminum nitride sintered body is limited in a range of 0.001 to 0.5 percent by weight. If the content of oxygen exceeds 0.5 percent by weight, thermal conductivity of at least 180 W/mK cannot be obtained. If the content of oxygen is not more than 0.001 percent by weight, on the other hand, density of the sintered body is instabilized. Further, the manufacturing cost is extremely increased to obtain an oxygen content of not more than 0.001 percent by weight.

The average particle size of aluminum nitride particles forming the inventive aluminum nitride sintered body is at least 5 μm. Following particle growth of the aluminum nitride particles, defects such as pores, oxygen etc. contained therein are discharged from intergranular parts, thereby to improve thermal conductivity of the aluminum nitride sintered body. In other words, insufficient particle growth of aluminum nitride particles leads to low thermal conductivity of the sintered body.

The inventive aluminum nitride sintered body contains an extremely small amount of intergranular phases. The intergranular phases are present in such a small amount that it is hard to detect the same by X-ray diffraction, in thickness of not more than 1 μm. The intergranular phases are bad thermal conductors, which are assumed to reduce thermal conductivity of aluminum nitride. Therefore, the amount of such intergranular phases is preferably reduced to the minimum, so far as the degree of sintering is not lowered. An aluminum nitride sintered body having high thermal conductivity can be obtained if intergranular phases, which are substantially not more than 1 μm in thickness, are scattered in grain boundaries.

The intergranular phases, containing a rare earth element, aluminum, oxygen and nitrogen, are present in a ratio of not more than 0.9 percent by volume in the sintered body. The intergranular phases are in composition of a high-temperature molten solution obtained by reaction of the rare earth element added as a sintering assistant with aluminum and oxygen present in the surfaces and interiors of aluminum nitride particles, which molten solution solution-treats nitrogen. The rare earth element added as a sintering assistant serves to deoxidize aluminum nitride. The amount of the intergranular phases contained in the sintered body is preferably not more than 0.9 percent by volume. If the amount of intergranular phases exceeds 0.9 percent by volume, thermal conductivity of the sintered body is reduced. The content of the intergranular phases is varied with the amount of addition of the rare earth element, the amount of oxygen contained in the raw material of aluminum nitride powder as an impurity, sintering conditions and the like, while a heat-conductive sintered body can be obtained if the said content is not more than 0.9 percent by volume. The amount of the rare earth element contained in the sintered body is substantially equivalent to the amount of that added to mixed powder serving as a raw material. Thus, the amount of reduction of the rare earth element is extremely small.

The inventive aluminum nitride sintered body contains carbon. The content of carbon is at least 0.001 percent and not more than 0.1 percent by weight. The ratio of the content of carbon to that of the rare earth element is within a range of 1/100 to 1/10. If the content of carbon exceeds 0.1 percent by weight, the sintered body is reduced in density as well as in thermal conductivity, and its dielectric voltage resistance is extremely reduced. Although the effect of existence of carbon is not yet clarified in mechanism, it may be considered that a small amount of carbon acts on reduction of aluminum nitride, to reduce the content of oxygen.

According to the inventive sintered body, no significant change is caused in distribution of the rare earth element in the sintered body. According to the conventional method of adding a large amount of sintering assistant to densify the material and thereafter removing the sintering assistant during sintering, the sintering assistant segregates on the surface of the sintered body, such that most part thereof is changed into a nitride. Thus, it is impossible to directly use the sintered body having the sintered face of this state. According to the present invention, on the other hand, no large segregation of the rare earth element is caused during sintering, whereby the sintered body can be directly used with the state of the sintered face. The sintered body according to the present invention is obtained with high density and high thermal conduction through addition of a small amount of sintering assistant. Thus, it is not necessary to remove the sintering assistant during sintering.

Surface roughness of the inventive sintered body, which is in the state of a sintered face, is not more than 5 μm in Rmax. According to the prior art, surface roughness in the state of a sintered face has inevitably exceeded 10 μm in Rmax. Surface roughness of a sintered body to be employed as a circuit board must be about 5 μm. The inventive sintered body having high thermal conductivity can be directly applied to a circuit board in the state of a sintered face.

Preferably a C-axis lattice constant of aluminum nitride particles is at least 4.9800 Å in the present invention. Upon solution treatment with oxygen, the lattice constant of aluminum nitride may be reduced. Thus, it may be considered that purity of aluminum nitride is reduced and an aluminum nitride sintered body having high thermal conductivity cannot be obtained when the lattice constant is not more than 4.9800 Å.

Aluminum nitride ceramics obtained by the present invention is extremely resistant against exposure to beams such as electron beams, cation beams and the like, as well as to sputtering by these beams. Thus, the inventive aluminum nitride sintered body presents excellent performance in employment under exposure to electron beams, plasma or the like. This may be considered because local temperature increase caused by exposure to such beams is small since aluminum nitride has high thermal conductivity, with small selective damage of intergranular phases which are recessive to beam application.

The aluminum nitride sintered body obtained by the present invention has permittivity of not more than 7.6 under a high frequency of 10 GHz. Such low permittivity is particularly important for a substrate for carrying a high-frequency element of a high speed. The inventive sintered body has low permittivity as a whole, since the same contains only a slight amount of intergranular phases having high permittivity.

According to the inventive method of manufacturing an aluminum nitride sintered body, aluminum nitride powder is first prepared. At least one rare earth element stearate or stearic acid compound containing a rare earth element is added to this aluminum nitride powder, so that mixed powder thus obtained contains 0.01 to 1.0 percent by weight of the rare earth element. Such mixing is performed in an organic solvent by a general method. Mixing in water is not preferable since the aluminum nitride powder is oxidized. The mixed powder thus obtained is formed with a forming assistant of paraffin, polyvinyl butyral (PVB), polyethylene glycol (PEG) or the like. A substance such as phenol resin, which is decomposed to leave carbon, carbon powder, graphite powder or the like may be added to control carbon remaining in a sintered body.

A stearic acid compound is the most preferable rare earth compound, due to mixability with the aluminum nitride powder, the amount of residual carbon etc., in addition to its action as a forming assistant.

The aluminum nitride powder must be in the form of fine homogeneous particles, the average particle size of which is preferably not more than 1 μm. The amount of oxygen contained in the aluminum nitride powder is preferably not more than 2.0 percent by weight. It is difficult to obtain such aluminum nitride powder by a direct nitriding method, i.e., a method through nitriding of metal aluminum. The aluminum nitride powder is obtained by a reduction nitriding method through reduction nitriding of aluminum oxide. When the aluminum nitride powder is to be obtained by the direct nitriding method, control of reaction, classification of particle size etc. must be sufficiently considered. After the mixed powder is formed, the formed body is sintered in a non-oxidizing atmosphere containing nitrogen at a sintering temperature of 1500 to 2200 • C. In order to attain high thermal conductivity, it is preferable to sinter the compact at a temperature of 1800 to 2100 • C for at least five hours, so that the aluminum nitride particles are at least 5 μm in average particle size. After the sintering step, the sintered body is quickly cooled. If the sintered body is slowly cooled, the sintering assistant is precipitated to extremely degrade the sintered face. The sintered body is preferably cooled at a rate of at least 200 • C/h to a temperature of 1500 • C.

The aluminum nitride sintered body obtained according to the present invention is provided thereon with a conductor circuit through metal paste, to be applied to a circuit board. Or, a ceramics package for a semiconductor device is formed by a substrate of the inventive aluminum nitride sintered body, a semiconductor element carried on the major surface of the substrate and a lead frame joined onto the major surface of the substrate.

Metal paste employed for forming a circuit pattern is prepared by adding a glass component or the like to a metal having a high melting point such as tungsten or molybdenum, or a conductor metal such as copper, gold, silver, silver-palladium or the like. A resistor pattern may be formed by metal paste prepared by adding a glass component or the like to a resistor of RuO_2 or the like. A substrate formed by the inventive sintered body, which is excellent in homogeneity and purity, has high adhesion strength with respect to metal paste. Thus, a highly reliable circuit board can,,be provided. Further, it is also possible to form a thin metal layer of Ti, Au, Ni, TaN or the like on the surface of the inventive aluminum nitride sintered body by ion plating, sputtering or the like, thereby to form a circuit pattern. Such a circuit pattern formed through the inventive sintered body is improved in stability against plating upon formation of the

circuit pattern, heating in the atmosphere in firing of paste etc. Also in this point, the inventive aluminum sintered body is superior to a circuit board employing a conventional aluminum nitride sintered body.

In a ceramics package prepared through the inventive sintered body, it is effective to interpose a stress relaxation member such as a copper plate for relaxing thermal stress caused between a lead frame and a substrate of the aluminum nitride sintered body, in order to ensure strength of the lead frame. Alternatively, a heat sink prepared by a copper-tungsten alloy plate or the like may be joined to the aluminum nitride sintered body employed as the substrate.

These and other objects, features, aspects and advantages of the present invention will become more apparent from the following detailed description of the present invention when taken in conjunction with the accompanying drawings.

Fig. 1 is a sectional view showing typical crystal structure of an aluminum nitride sintered body according to the present invention;

Fig. 2A is a typical diagram showing a mixed state of aluminum nitride particles and sintering assistant particles in a step of manufacturing a conventional aluminum nitride sintered body;

Fig. 2B is a typical diagram showing a mixed state of aluminum nitride particles and sintering assistant particles in a step of manufacturing an aluminum nitride sintered body according to the present invention;

Fig. 3 is a graph showing the result of measurement obtained by Example 2 for proving that the inventive aluminum nitride sintered body has high thermal conductivity;

Fig. 4 is a plan view showing a circuit board obtained through the inventive aluminum nitride sintered body;

Figs. 5A and 5B are sectional views showing junction structure of the inventive aluminum nitride sintered body which is employed as a package for a semiconductor device; and

Fig. 6 is a sectional view showing a package for a semiconductor device obtained through Example 10.

Example 1

Yttrium stearate in each amount shown in Table 1 and 10 percent by weight of PVB, serving as a forming assistant, were added to aluminum nitride powder having average particle size of 0.4 μm and an oxygen content of 1.4 percent by weight, to be sufficiently mixed with each other in ethanol. Mixed powder thus obtained was formed into a thin plate of 35 mm x 35 mm x 3 mm by a mechanical press. A formed body thus obtained was sintered in a nitrogen air current under conditions shown in Table 1. Table 1 also shows characteristics of each sintered body thus obtained. It is understood that an aluminum nitride sintered body having high thermal conductivity and low permittivity can be obtained with an amount of yttrium (Y) within a range of 0.01 to 1.0 percent by weight and an amount of oxygen not more than 0.5 percent by weight. Fig. 1 is a sectional view showing the structure of a sintered body obtained through the sample No. 4 in Table 1. It is obvious from Fig. 1 that crystals of aluminum nitride particles 101 are uniform. It is also understood that an extremely small amount of intergranular phases 102 are scattered in grain boundaries between the aluminum nitride particles 101. The oxygen content was analyzed through gas analysis after pulverizing each sintered body into particles of about 200 μm in particle size.

Table 1

Sample No.	Amount of Y (wt.%)	Sintering Condition	Characteristics of Sintered Body					
			Relative Density (%)	Thermal Conductivity (W/mK)	Permittivity ($10MH_z$)	Permittivity ($10GH_z$)	Oxygen Content (wt.%)	Y Content (wt.%)	A (Å)
*1	0	1950°Cx5h.	92	65	8	7.3	1.0	0	4.9800
2	0.1		99	190	8	7.3	0.5	0.1	4.9805
3	0.3		100	220	8	7.3	0.3	0.3	4.9815
4	0.6			230	8	7.3	0.2	0.6	4.9815
5	0.9			240	8	7.3	0.1	0.9	4.9815
*6	1.2			240	10	9.0	0.2	1.2	4.9815
*7	3.0			230	13	12.0	1.0	3.0	4.9817
8	0.5	1900°Cx1h.	100	190	8	7.3	0.5	0.5	4.9800
*9	0.5	1800°Cx1h.	95	85	8	7.3	0.9	0.5	4.9770
10	0.5	2100°Cx3h.	100	230	8	7.3	0.2	0.4	4.9815
*11	0.5 in Y_2O_3	do.	98	110	8	7.3	0.8	0.4	4.9800

* Reference Example

Example 2

Fig. 3 shows the result of measurement in an experiment made on the sample No. 4 shown in Table 1 while changing the sintering time. Aluminum nitride particles in a sintered body obtained in the experiment

were varied in grain size with the sintering time. As shown in Fig. 3, the first sintered body having thermal conductivity of at least 180 W/mK was obtained when the average particle size of the aluminum nitride particles exceeded 5 μm. In other words, it is important to sufficiently recrystallize aluminum nitride in order to obtain a sintered body having high thermal conductivity. Referring to Fig. 3, each of samples expressed in curves A and B, showing the results of measurement, contained 0.7 percent by weight of carbon after forming and before sintering, while the carbon content was reduced to be below 0.1 percent by weight after sintering.

Example 3

Yttrium stearate in each amount shown in Table 2 and 10 percent by weight of paraffin, serving as a forming assistant, were added to aluminum nitride powder having average particle size of 0.4 μm and an oxygen content of 1.4 percent by weight, and sufficiently mixed with each other in ethanol. Thereafter the mixture was dried and mixed powder thus obtained was formed into a plate of 35 mm x 35 mm x 3 mm by a mechanical press. A formed body thus obtained was sintered in a nitrogen air current under sintering conditions shown in Table 2. Contents of oxygen, carbon and yttrium (Y) in a sintered body thus obtained were analyzed, followed by measurement of thermal conductivity. As the result, it has been understood that a sintered body having particularly high thermal conductivity can be obtained when the amount of residual carbon in the sintered body is not more than 0.1 percent by weight and the ratio of the content of carbon to that of a rare earth element is within a range of 1/100 to 1/10.

Table 2

Sample No.	Amount of Y (wt.%)	Sintering Condition	Characteristics of Sintered Body				
			Carbon (wt.%)	Y (wt.%)	Oxygen (wt.%)	Thermal Conductivity (W/mK)	Relative Density (%)
21	0.2	1950 • Cx5H in AlN Case	0.01	0.2	0.4	200	99
22	0.2	1950 • Cx2H in C Case	0.04	0.2	0.3	220	99
*23	0.1	1950 • Cx5H in C Case	0.15	0.1	0.1	140	95
24	0.8	1950 • Cx10H in AlN Case	0.04	0.8	0.3	240	99
25	0.8	2050 • Cx5H in AlN Case	0.08	0.3	0.05	260	99
26	0.2	1900 • Cx3H in AlN Case	0.005	0.2	0.2	180	100

* Reference Example

Reference Example

A formed body of the sample No. 7 in Table 1 was sintered in a carbon case at a temperature of 1950 • C for 72 hours, to obtain an aluminum nitride sintered body having relative density of 100 %, thermal conductivity of 240 W/mK, permittivity of 8 at 10 MHz and 7.3 at 10 GHz, an oxygen content of 0.1 percent by weight and a yttrium content of 0.6 percent by weight. However, segregation of YN was recognized on the sintered face, to prove that this sintered body cannot be directly employed as a material for a substrate in the state of the sintered face.

On the other hand, no segregation of YN or another second phase was recognized but aluminum nitride particles were homogeneously present in a sintered body according to the present invention.

Example 5

Mixed powder obtained by adding 1.5 percent by weight of CaO powder to aluminum nitride powder having average particle size of 0.4 μm and an oxygen content of 1.4 percent by weight was press-formed, to obtain a formed body of 35 mm x 35 mm x 1.0 mm. This formed body was sintered in an air current at a temperature of 2000 • C for 10 hours, to obtain a sintered body having relative density of 100 %, thermal conductivity of 210 W/mK, permittivity of 8 to 10 MHz and 7.3 at 10 GHz, an oxygen content of 0.2 percent

by weight and a Ca content of 0.1 percent by weight. A sintered body thus obtained had an extremely irregular sintered face, with surface roughness of 10 μm in Rmax. Thus, it was impossible to employ this sintered body as a material for a substrate in such a state of the sintered face.

In place of the CaO powder, yttrium stearate of 1.5 percent by weight (0.15 percent by weight in yttrium element conversion) was added to obtain mixed powder, which was sintered to prepare a sintered body according to the inventive sintering method. Surface roughness of a sintered face of the sintered body was 4 μm in Rmax, to be employable as a material for a substrate in the state of the sintered face.

Example 6

Sintered bodies of the samples Nos. 10 and 11 in Table 1 were exposed to ion beams under conditions of ion generation voltage of 8 KV, ion generation current of 0.5 mA, an angle of incidence of 30° and sputtering time of 150 minutes. As the result, the sintered body of the sample No. 10 was sputtered only by 2 μm in depth, while the sintered body of the sample No. 11 was sputtered by 11 μm in depth. Thus, it is understood that the inventive aluminum nitride sintered body is excellent in resistance against sputtering.

Example 7

Each sintering assistant shown in Table 3 and 5 percent by weight of acrylic resin, serving as a forming assistant, were added to aluminum nitride powder having average particle size of 0.5 μm and an oxygen content of 1.0 percent by weight, to be sufficiently mixed with each other. Mixed powder thus obtained was formed to be 35 mm x 35 mm x 3.0 mm in size. This formed body was sintered in a nitrogen current at a temperature of 1950°C for five hours. Table 3 shows characteristics of each sintered body thus obtained. It is understood that the inventive sintered body has high thermal conductivity.

Table 3

No.	Sintering Assistant		Characteristics of Sintered Body				
	Compound	(wt.%)	Relative Density (%)	Thermal Conductivity (W/mK)	Permittivity ($10MH_z$)	Permittivity ($10GH_z$)	Surface Roughness (μ)
31	Ce-stearate	0.5	100	210	8	7.3	4
32	Gd-stearate	0.5	100	210	8	7.3	4
33	Pr-stearate	0.5	100	210	8	7.3	4
34	Y-stearate Ce-stearate	0.3 0.3	100 100	220 220	8 8	7.3 7.3	4 4
*35	Y-alkoxide	0.5	100	200	8	7.3	4

* Reference Example

Example 8

Commercially available silver paste, gold paste, silver-palladium paste or the like was screen-printed on the surface of an aluminum nitride sintered body obtained through the sample No. 4 shown in Table 1, to

be fired in the atmosphere at a temperature of 850 to 950 °C. A conductor pattern formed on the surface of a sintered body thus obtained had adhesion strength of at least 1 Kg/mm^2. Thus, it is understood that the inventive aluminum nitride sintered body can be employed as a circuit board.

Fig. 4 is a plan view showing a circuit board formed in the aforementioned manner. Referring to Fig. 4, a conductor pattern 402 of metal paste is formed on the surface of an aluminum sintered body substrate 401.

Example 9

Similarly to Example 8, paste mainly composed of tungsten or molybdenum was screen-printed on an aluminum nitride sintered body, which was then fired in a nitrogen air current at a temperature of 1500 °C. Thereafter nickel plating was performed to be brazed with a plate of Kovar, whereby any metallized layer having a high melting point presented high adhesion strength of about 5 Kg/mm^2.

Figs. 5A and 5B are sectional views showing ceramics packages for semiconductor devices, to which the above Example is applied. Referring to each of these figures, a metallized layer 502 is formed partially on the surface of a substrate 501 of an aluminum nitride sintered body, and a lead frame 503 of a Kovar plate is brazed by a brazing metal or the like to the metallized layer 502, to be joined with the same. Preferably a cushioning member 513 of a copper plate, for example, provided with a nickel-plated layer on its surface is interposed between the metallized layer 502 and the lead frame 503, as shown in Fig. 5B. A semiconductor element 504 such as an FET of high calorific power is carried on a prescribed position of the substrate 501 of the aluminum nitride sintered body, to be connected with the metallized layer 502 or the lead frame 503 by a bonding wire 505.

Further, preferably a heat sink 506 of tungsten alloy such as copper-tungsten alloy, for example, is mounted on the surface of the substrate 501 of the aluminum nitride sintered body. As shown in Fig. 5B, a thin plating layer 507 is formed on the metallized layer 502 in the junction between the aluminum nitride sintered body substrate 501 and the lead frame 503, while the lead frame 503 is formed by a metal layer 523 of Kovar or the like and a plating layer 508 provided on the outer peripheral surface thereof at need, in order to stabilize the wetting property of a metal brazing material 509. "Kovar" is a trade name for Fe-29wt.%Ni-17wt.%Co alloy.

Example 10

An aluminum nitride ceramic substrate of 15 mm square having thickness of 0.9 mm was obtained through a manufacturing method similar to that for the sample No. 10 in Table 1. As shown in Fig. 6, such an aluminum nitride ceramic substrate 601a had a cavity in its center. A gold-metallized layer 602 was formed in the cavity, and a silicon semiconductor element 604 was joined thereon by die bonding. A PbO, B_2O_3 seal glass member 605 containing composition β spodumene was filled in the peripheral edge portion of the aluminum nitride ceramic substrate 601a. A lead frame 603 of 42 alloy (Fe-42wt.% alloy) was provided on the seal glass member 605. A cap 601b of aluminum nitride, the peripheral edge portion of which was filled with a seal glass member 605 similarly to the aluminum nitride ceramic substrate 601a, was fixed onto the lead frame 605. A ceramic package for a semiconductor device thus obtained presented thermal resistance of 20 °C/W. Thus, it was possible to suppress temperature increase of a semiconductor element carried in the package with no specific heat release mechanism.

Claims

1. A heat-conductive aluminum nitride sintered body having a thermal conductivity of at least 180 W/mk, mainly composed of aluminum nitride, containing 0.01 to 1.0 percent by weight of a rare earth element, 0.001 to 0.5 percent by weight of oxygen and 0.001 to 0.1 percent by weight of carbon the ratio of said content of carbon to that of said rare earth element being 1/100 to 1/10, and having aluminum nitride particles of an average particle size of at least 5 micrometers and intergranular phases existing between said aluminum nitride particles, **characterized** in that said intergranular phases have a thickness of not more than 1 micrometer and contain a rare earth element, aluminum, oxygen and nitrogen and in that said sintered body has a surface roughness of not more than 5 micrometers in Rmax in the state of a sintered face.

2. An aluminum nitride sintered body in accordance with claim 1, wherein said intergranular phases, containing a rare earth element, aluminum, oxygen, nitrogen and carbon are present in said sintered

body in the ratio of not more than 0.9 percent by volume.

3. An aluminum nitride sintered body in accordance with any of claims 1 or 2, having a permittivity of less than of 7.6 under a high frequency of 10 GHz.

4. An aluminum nitrid sintered body in accordance with claim 1 wherein the C-axis lattice constant of said aluminum nitride particles is at least 4.9800 Å.

5. An aluminum nitride circuit board comprising:
a substrate (401) including a heat-conductive aluminum nitride sintered body according to any of claims 1 to 4 and having a major surface, and a circuit pattern (402) of conductive paste formed on said major surface of said substrate.

6. An aluminum nitride circuit board in accordance with claim 6, wherein said conductive paste contains at least one metal selected from a group of silver, gold, palladium and copper.

7. An aluminum nitride circuit board in accordance with claim 6, wherein said conductive paste contains either tungsten or molybdenum.

8. A package for a semiconductor device comprising:
a substrate (501) including a heat-conductive aluminum nitride sintered body according to any of claims 1 to 4 and having a major surface; a semiconductor element (504) carried on said major surface of said substrate; and a lead frame (503) joined on said major surface of said substrate.

9. A package for a semiconductor device in accordance with claim 9, further including a heat sink (506) joined to said substrate.

10. A package for a semiconductor device in accordance with claim 9, wherein said lead frame is joined on said substrate through a stress relaxation (513) member.

11. A method of manufacturing the heat-conductive aluminum nitrid sintered body of claim 1 comprising the steps of:
preparing aluminum nitride powder (201);
adding at least one rare earth metal stearate or stearic acid compound containing a rare earth element to said aluminum nitride powder to contain 0.01 to 1.0 percent by weight, in rare earth element conversion, of said compound and homogeneously mixing the same thereby to obtain mixed powder;
forming said mixed powder to obtain a formed body; and
sintering said formed body in a non-oxidizing atmosphere containing nitrogen at a temperature of 1500 to 2200 °C.

12. A method of manufacturing an aluminum nitride sintered body in accordance with claim 11, wherein said step of preparing said aluminum nitride powder includes preparation of aluminum nitride powder having an oxygen content of not more than 2.0 percent by weight and average particle size of not more than 1.0 µm.

13. A method of manufacturing an aluminum nitride sintered body in accordance with claim 11, wherein said step of preparing said aluminum nitride powder includes preparation of said aluminum nitride powder by reduction-nitriding aluminum oxide powder.

14. A method of manufacturing an aluminum nitride sintered body in accordance with claim 11, wherein said step of sintering said formed body includes a step of sintering said formed body at a temperature of 1800 to 2100 °C for at least five hours to make particle growth until the average particle size of said aluminum nitride particles exceeds 5 µm.

Patentansprüche

1. Wärmeleitender gesinterter Aluminiumnitridkörper mit einer Wärmeleitfähigkeit von wenigstens 180 W/mK, der hautpsächlich aus Aluminiumnitrid zusammengesetzt ist, 0,01 bis 1,0 Gew.-% eines

Seltenerdelements, 0,001 bis 0,5 Gew.-% Sauerstoff und 0,001 bis 0,1 Gew.-% Kohlenstoff enthält, wobei das Verhältnis des Kohlenstoffgehalts zu dem des Seltenerdelements 1/100 bis 1/10 ist, und Aluminiumnitrid-Teilchen einer durchschnittlichen Teilchengröße von wenigstens 5 Mikrometern und zwischen den Aluminiumnitrid-Teilchen existierende intergranulare Phasen aufweist, **dadurch gekennzeichnet, daß** die intergranularen Phasen eine Dicke von nicht mehr als 1 Mikrometer haben und ein Seltenerdelement, Sauerstoff und Stickstoff enthalten, und daß der Sinterkörper eine Oberflächenrauheit von nicht mehr als 5 Mikrometern in Rmax im Zustand der Sinteroberfläche hat.

2. Gesinterter Aluminiumnitridkörper nach Anspruch 1, **dadurch gekennzeichnet, daß** die intergranularen Phasen, die ein Seltenerdelement, Aluminium, Sauerstoff, Stickstoff und Kohlenstoff enthalten, in dem Sinterkörper in einem Verhältnis von nicht mehr als 0,9 Vol.-% vorhanden sind.

3. Gesinterter Aluminiumnitridkörper nach einem der Ansprüche 1 oder 2, der unter einer hohen Frequenz von 10 GHz eine absolute Dielektrizitätskonstante von weniger als 7,6 hat.

4. Gesinterter Aluminiumnitridkörper nach Anspruch 1, **dadurch gekennzeichnet, daß** die Konstante des C-Achsen-Gitters der Aluminiumnitrid-Teilchen wenigstens 4,9800 Å beträgt.

5. Aluminiumnitrid-Leiterplatte, die aufweist:
ein Substrat (401), das einen wärmeleitenden gesinterten Aluminiumnitridkörper nach einem der Ansprüche 1 bis 4 enthält und eine Hauptoberfläche hat, und ein Schaltmuster (402) aus leitender Paste, das auf der Hauptoberfläche des Substrats gebildet ist.

6. Aluminiumnitrid-Leiterplatte nach Anspruch 6, **dadurch gekennzeichnet, daß** die leitende Paste wenigstens ein aus einer Gruppe mit Silber, Gold, Palladium und Kupfer bestehenden Gruppe ausgewähltes Metall enthält.

7. Aluminiumnitrid-Leiterplatte nach Anspruch 6, **dadurch gekennzeichnet, daß** die leitende Paste entweder Wolfram oder Molybdän enthält.

8. Gehäuse für eine Halbleitervorrichtung, die aufweist:
ein Substrat (501), das einen wärmeleitenden gesinterten Aluminiumnitridkörper nach einem der Ansprüche 1 bis 8 aufweist und eine Hauptoberfläche hat; ein auf der Hauptoberfläche getragenes Halbleiterelement (504); und einen mit der Hauptoberfläche des Substrats verbundenen Leiterrahmen (503).

9. Gehäuse für eine Halbleitervorrichtung nach Anspruch 9, das weiterhin einen mit dem Substrat verbundenen Wärmeableiter (506) aufweist.

10. Gehäuse für eine Halbleitervorrichtung nach Anspruch 9, **dadurch gekennzeichnet, daß** der Leiterrahmen über ein spannungslösendes (513) Element auf dem Substrat verbunden ist.

11. Verfahren zum Herstellen eines wärmeleitenden gesinterten Aluminiumnitridkörpers von Anspruch 1, das die Schritte umfaßt:
- Herstellen von Aluminiumnitrid-Pulver (201);
- Zugeben von mindestens einem Seltenerd-Stearat oder einem Stearinsäure-Bestandteil, der ein Seltenerdelement enthält, zu dem Aluminiumnitrid-Pulver, so daß er bei der Seltenerdumwandlung 0,01 bis 1,0 Gew.-% des Bestandteils enthält, und homogenes Mischen derselben, um eine Pulvermischung zu erhalten;
- Formen der Pulvermischung, um ein Formteil zu erhalten;
- Sintern des Formteils bei einer Temperatur von 1500 bis 2200 °C in einer nicht-oxidierenden, Sauerstoff enthaltenden Atmosphäre.

12. Verfahren zum Herstellen eines gesinterten Aluminiumnitridkörpers nach Anspruch 11, **dadurch gekennzeichnet, daß** der Schritt des Herstellens des Aluminiumnitrid-Pulvers die Herstellung von Aluminiumnitrid-Pulver mit einem Sauerstoffgehalt von nicht mehr als 2,0 Gew.-% und einer durchschnittlichen Teilchengröße von nicht mehr als 1,0 µm umfaßt.

13. Verfahren zum Herstellen eines gesinterten Aluminiumnitridkörpers nach Anspruch 11, **dadurch gekennzeichnet, daß** der Schritt des Herstellens des Aluminiumnitrid-Pulvers das Herstellen von Aluminiumnitrid-Pulver durch Reduktions-Nitrierung von Aluminiumoxid-Pulver umfaßt.

14. Verfahren zum Herstellen eines gesinterten Aluminiumnitridkörpers nach Anspruch 11, **dadurch gekennzeichnet, daß** der Schritt des Sinterns des Formkörpers einen Schritt des Sinterns des Formkörpers bei einer Temperatur von 1800 bis 2100 °C für wenigstens 5 Stunden umfaßt, um ein Teilchenwachstum zu bewirken, bis die durchschnittliche Teilchengröße der Aluminiumnitrid-Teilchen 5 µm übersteigt.

Revendications

1. Corps fritté en nitrure d'aluminium thermoconducteur ayant une conductivité thermique d'au moins 180 W/mk, principalement composé de nitrure d'aluminium, contenant 0,01 à 1,0 % en poids d'un élément des terres rares, 0,001 à 0,5 % en poids d'oxygène et 0,001 à 0,1 % en poids de carbone, le rapport de ladite teneur en carbone à celle en ledit élément des terres rares étant de 1/100 à 1/10, et ayant des particules de nitrure d'aluminium d'une taille moyenne des particules d'au moins 5 µm, et des phases intergranulaires existant entre lesdites particules de nitrure d'aluminium, **caractérisé** en ce que lesdites phases intergranulaires ont une épaisseur non supérieure à 1 µm et contiennent un élément des terres rares, de l'aluminium, de l'oxygène et de l'azote, et en ce que ledit corps fritté a une rugosité superficielle non supérieure à 5 µm en Rmax dans l'état d'une face frittée.

2. Corps fritté en nitrure d'aluminium selon la revendication 1, dans lequel lesdites phases intergranulaires, contenant un élément des terres rares, de l'aluminium, de l'oxygène, de l'azote et du carbone, sont présentes dans ledit corps fritté dans un rapport non supérieur à 0,9 % en volume.

3. Corps fritté en nitrure d'aluminium selon l'une quelconque des revendications 1 ou 2, ayant une permittivité inférieure à 7,6 sous une haute fréquence de 10 GHz.

4. Corps fritté en nitrure d'aluminium selon la revendication 1, dans lequel la constante de réseau d'axe C desdites particules de nitrure d'aluminium est d'au moins 4,9800 Å.

5. Carte de circuit en nitrure d'aluminium, comprenant :
un substrat (401) incluant un corps fritté en nitrure d'aluminium thermoconducteur selon l'une quelconque des revendications 1 à 4 et ayant une surface majeure, et une configuration de circuit (402) en pâte conductrice formée sur ladite surface majeure dudit substrat.

6. Carte de circuit en nitrure d'aluminium selon la revendication 6, dans laquelle ladite pâte conductrice contient au moins un métal choisi dans le groupe de l'argent, de l'or, du palladium et du cuivre.

7. Carte de circuit en nitrure d'aluminium selon la revendication 6, dans laquelle ladite pâte conductrice contient soit du tungstène soit du molybdène.

8. Ensemble pour un dispositif semi-conducteur, comprenant :
un substrat (501) incluant un corps fritté en nitrure d'aluminium thermoconducteur selon l'une quelconque des revendications 1 à 4 et ayant une surface majeure ; un élément semi-conducteur (504) placé sur ladite surface majeure dudit substrat ; et un cadre en plomb (503) joint sur ladite surface majeure dudit substrat.

9. Ensemble pour un dispositif semi-conducteur selon la revendication 9, incluant en outre un puits de chaleur (506) joint audit substrat.

10. Ensemble pour un dispositif semi-conducteur selon la revendication 9, dans lequel ledit cadre en plomb est joint sur ledit substrat par un élément de relaxation de contrainte (513).

11. Procédé de fabrication du corps fritté en nitrure d'aluminium thermoconducteur selon la revendication 1, comprenant les étapes de :
préparation d'une poudre de nitrure d'aluminium (201) ;

addition à ladite poudre de nitrure d'aluminium d'au moins un composé d'acide stéarique ou de stéarate d'un métal des terres rares, contenant un élément des terres rares pour contenir 0,01 à 1,0 % en poids, en conversion d'élément des terres rares, dudit composé ; et mélange de façon homogène de ceux-ci pour obtenir une poudre mélangée ;

formation de ladite poudre mélangée pour obtenir un corps formé ; et

frittage dudit corps formé dans une atmosphère non oxydante contenant de l'azote à une température de 1 500 à 2 200 °C.

12. Procédé de fabrication d'un corps fritté en nitrure d'aluminium selon la revendication 11, dans lequel ladite étape de préparation de ladite poudre de nitrure d'aluminium inclut la préparation d'une poudre de nitrure d'aluminium ayant une teneur en oxygène non supérieure à 2,0 % en poids et une taille moyenne des particules non supérieure à 1,0 µm.

13. Procédé de fabrication d'un corps fritté en nitrure d'aluminium selon la revendication 11, dans lequel ladite étape de préparation de ladite poudre de nitrure d'aluminium inclut la préparation de ladite poudre de nitrure d'aluminium par une nitruration réductrice d'une poudre d'oxyde d'aluminium.

14. Procédé de fabrication d'un corps fritté en nitrure d'aluminium selon la revendication 11, dans lequel ladite étape de frittage dudit corps formé inclut une étape de frittage dudit corps formé à une température de 1 800 à 2 100 °C pendant au moins cinq heures pour effectuer un développement des particules jusqu'à ce que la taille moyenne de particules desdites particules de nitrure d'aluminium dépasse 5 µm.

FIG.1

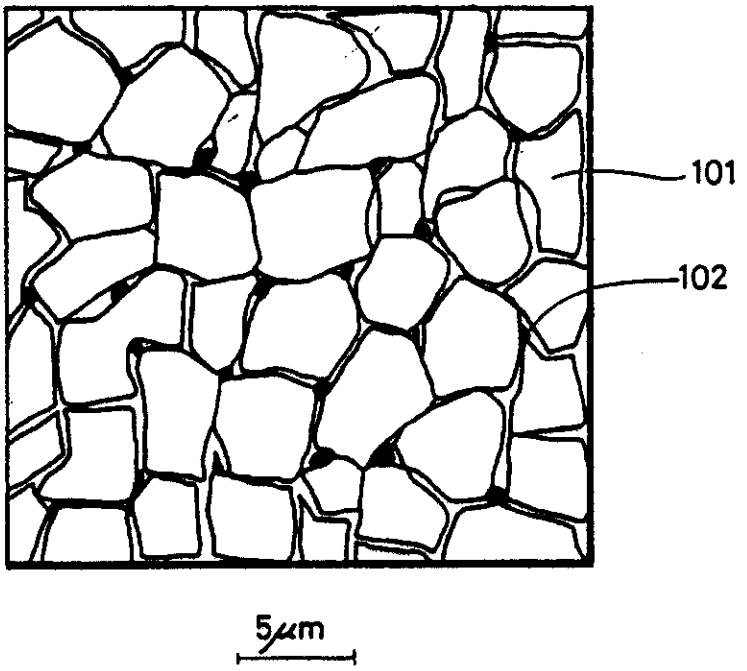

FIG.2A

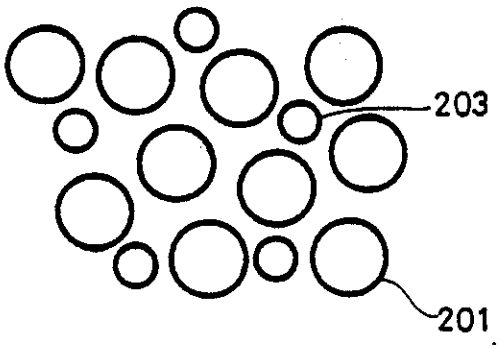

FIG.2B

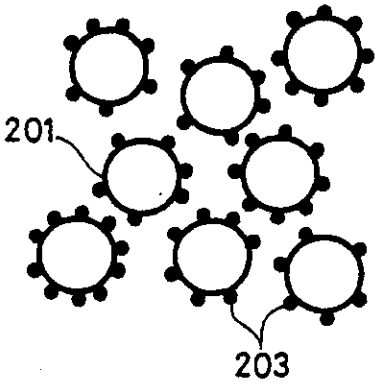

FIG.3

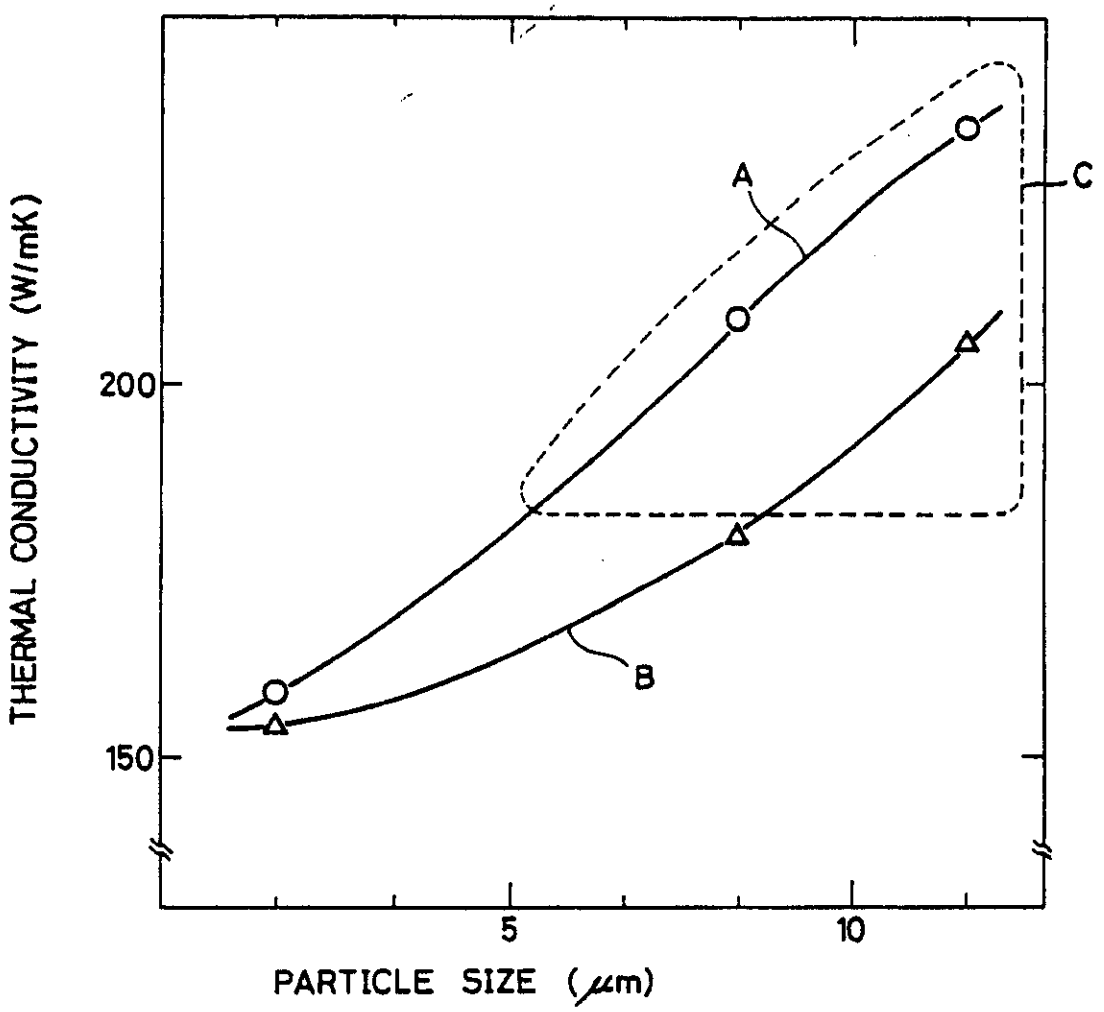

A : Y_2O_3 : 0.6wt%, C : 0.7wt%
B : Y_2O_3: 0.3wt%, C : 0.7wt%
C : PRESENT INVENTION

FIG.4

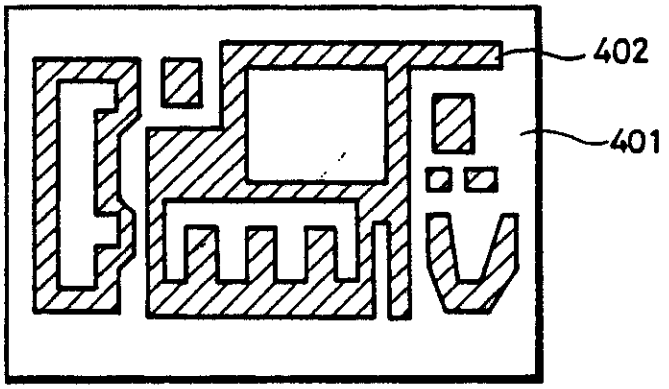

FIG.5A

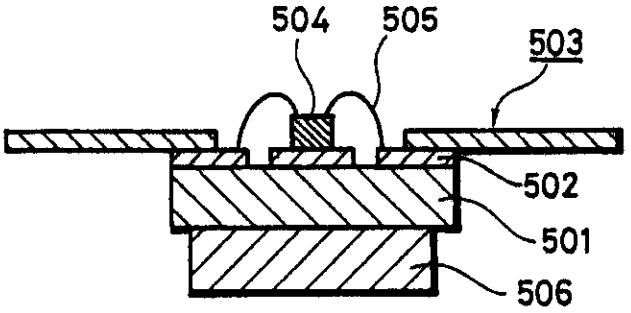

FIG.5B

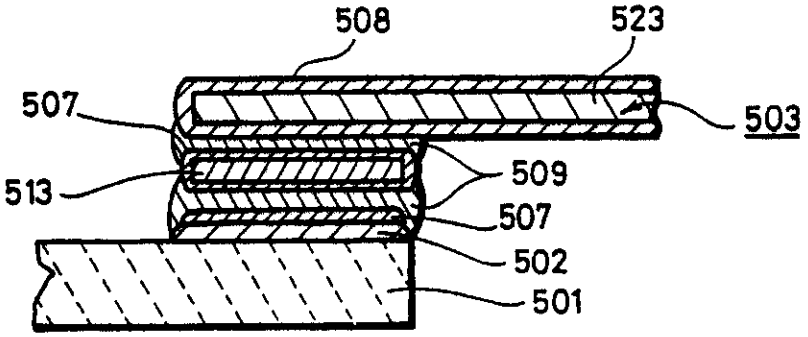

FIG.6

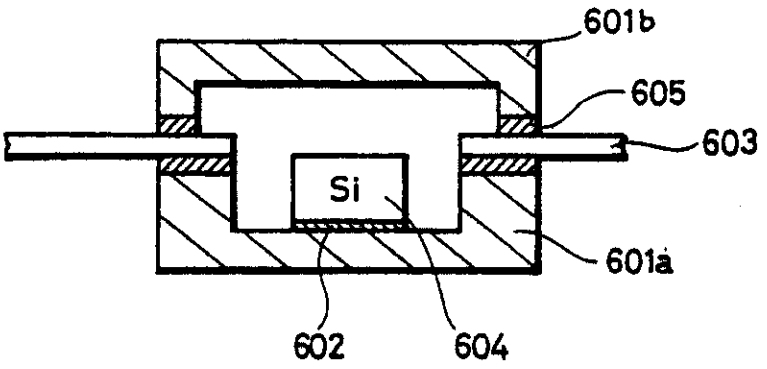

REGISTER ENTRY FOR EP0330848

European Application No EP89101641.2 filing date 31.01.1989

Priority claimed:
08.02.1988 in Japan - doc: 63028270

Designated States DE FR GB IT

Title HEAT-CONDUCTIVE ALUMINIUM NITRIDE SINTERED BODY AND METHOD OF MANUFACTURING THE SAME.

Applicant/Proprietor
SUMITOMO ELECTRIC INDUSTRIES, LIMITED, 5-33, Kitahama 4-chome Chuo-ku, Osaka, Japan [ADP No. 50061837003]

Inventors
AKIRA YAMAKAWA, Itami Works of Sumitomo Electric Industries, Ltd., 1-1 Koyakita 1-chome Itami-shi Hyogo-ken, Japan [ADP No. 56801087001]

MASAYA MIYAKE, Itami Works of Sumitomo Electric Industries, Ltd., 1-1 Koyakita 1-chome Itami-shi Hyogo-ken, Japan [ADP No. 56801095001]

HITOYUKI SAKANOUE, Itami Works of Sumitomo Electric Industries, Ltd., 1-1 Koyakita 1-chome Itami-shi Hyogo-ken, Japan [ADP No. 56801103001]

HISAO TEKEUCHI, Itami Works of Sumitomo Electric Industries, Ltd., 1-1 Koyakita 1-chome Itami-shi Hyogo-ken, Japan [ADP No. 56801111001]

KOICHI SOGABE, Itami Works of Sumitomo Electric Industries, Ltd., 1-1 Koyakita 1-chome Itami-shi Hyogo-ken, Japan [ADP No. 56801129001]

AKIRA SASAME, Itami Works of Sumitomo Electric Industries, Ltd., 1-1 Koyakita 1-chome Itami-shi Hyogo-ken, Japan [ADP No. 56801137001]

Classified to
C04B

Address for Service
KILBURN & STRODE, 30 John Street, LONDON, WC1N 2DD, United Kingdom [ADP No. 00000125001]

EPO Representative
KLAUS DIETER KIRSCHNER, Patentanwälte Herrmann-Trentepohl Kirschner Grosse Bockhorni Forstenrieder Allee 59, D-8000 München 71, Federal Republic of Germany [ADP No. 56663172001]

Publication No EP0330848 dated 06.09.1989
Publication in English

Examination requested 27.01.1990

Patent Granted with effect from 31.08.1994 (Section 25(1)) with title
HEAT-CONDUCTIVE ALUMINIUM NITRIDE SINTERED BODY AND METHOD OF MANUFACTURING THE SAME.

11.02.1991 Notification from EPO of change of Applicant/Proprietor details
from

to
SUMITOMO ELECTRIC INDUSTRIES, LIMITED, 5-33, Kitahama 4-chome
Chuo-ku, Osaka, Japan [ADP No. 50061837003]

SUMITOMO ELECTRIC INDUSTRIES LIMITED, No. 15, Kitahama 5-chome,
Higashi-ku, Osaka-shi, Osaka 541, Japan [ADP No. 50038223001]
Entry Type 25.14 Staff ID. RD06 Auth ID. EPT

14.06.1994 KILBURN & STRODE, 30 John Street, LONDON, WC1N 2DD, United Kingdom
[ADP No. 00000125001]
registered as address for service
Entry Type 8.11 Staff ID. DD1 Auth ID. AA

29.07.1994 Notification from EPO of change of Applicant/Proprietor details
from
SUMITOMO ELECTRIC INDUSTRIES, LIMITED, 5-33, Kitahama 4-chome
Chuo-ku, Osaka, Japan [ADP No. 50061837003]

SUMITOMO ELECTRIC INDUSTRIES LIMITED, No. 15, Kitahama 5-chome,
Higashi-ku, Osaka-shi, Osaka 541, Japan [ADP No. 50038223001]
to
SUMITOMO ELECTRIC INDUSTRIES, LTD., 5-33, Kitahama 4-chome,
Chuo-ku, Osaka-shi, Osaka 541, Japan [ADP No. 50038223001]
Entry Type 25.14 Staff ID. RD06 Auth ID. EPT

29.07.1994 Notification from EPO of change of EPO Representative details from
KLAUS DIETER KIRSCHNER, Patentanwälte Herrmann-Trentepohl Kirschner
Grosse Bockhorni Forstenrieder Allee 59, D-8000 München 71, Federal
Republic of Germany [ADP No. 56663172001]
to
DIPL.-PHYS. KLAUS DIETER KIRSCHNER, Patentanwälte
Herrmann-Trentepohl, Kirschner, Grosse, Bockhorni & Partner
Forstenrieder Allee 59, D-81476 München, Federal Republic of
Germany [ADP No. 56663172001]
Entry Type 25.14 Staff ID. RD06 Auth ID. EPT

**** END OF REGISTER ENTRY ****

RENEWAL DETAILS

PUBLICATION NUMBER	EP0330848

PROPRIETOR(S)

SUMITOMO ELECTRIC INDUSTRIES, LTD., 5-33, Kitahama 4-chome, Chuo-ku, Osaka-shi, Osaka 541, Japan

DATE FILED	31.01.1989
DATE GRANTED	31.08.1994
DATE NEXT RENEWAL DUE	31.01.1996
DATE NOT IN FORCE	
DATE OF LAST RENEWAL	23.01.1995
YEAR OF LAST RENEWAL	07
STATUS	PATENT IN FORCE