United States Patent [19]

Yoshida

[11] **3,873,218**

[45] **Mar. 25, 1975**

[54] **WRITING INSTRUMENT FOR LOW-VISCOUS INK WITHOUT AN ABSORBING FIBROUS BUNDLE**

[75] Inventor: **Kisaburo Yoshida,** Osaka, Japan

[73] Assignee: **Kabushiki Kaisha Sakurakurepasu,** Osaka, Japan

[22] Filed: **Apr. 3, 1973**

[21] Appl. No.: **347,465**

[30] **Foreign Application Priority Data**

Apr. 26, 1972 Japan 47-42508

[52] **U.S. Cl.** **401/292,** 401/209

[51] **Int. Cl.** **B43k 5/00**

[58] **Field of Search** 401/292, 198, 199, 223, 401/224, 134, 209, 261

[56] **References Cited**

UNITED STATES PATENTS

3,338,216	8/1967	Roller	401/292 X
3,361,516	1/1968	Rigondaud	401/292
3,501,225	3/1970	Martin et al.	401/198
3,614,248	10/1971	Otsuka	401/292
3,687,561	8/1972	Phillips	401/292

FOREIGN PATENTS OR APPLICATIONS

422,575	4/1967	Switzerland	401/198

Primary Examiner—Lawrence Charles
Attorney, Agent, or Firm—Larson, Taylor and Hinds

[57] **ABSTRACT**

Writing instrument comprising a pen tip, a reservoir containing low-viscous ink, an ink feeding conduit extending from the pen tip into the reservoir and having an inner ink passageway extending therethrough, an air admission inside tube covering the conduit, with an annular air passage formed therebetween to permit a capillary action therein, and an air admission outside tube covering the inside tube, with a large space formed therebetween, and having an air port in its rear portion. The conduit is formed in its peripheral wall with a port positioned in the front end of the reservoir to permit the ink passageway to communicate with the interior of the reservoir. The opposite ends of the outside tube are closed, while the annular air passage has a front end open to the front portion of the outside tube and a rear end open to the front end of the reservoir, whereby the ink in the reservoir is rendered replaceable by air.

7 Claims, 6 Drawing Figures

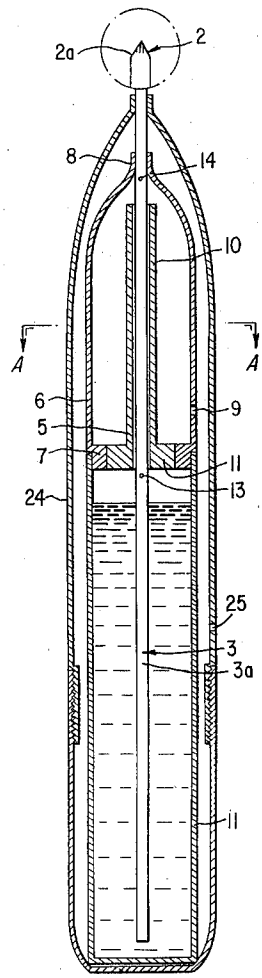

FIG. 1

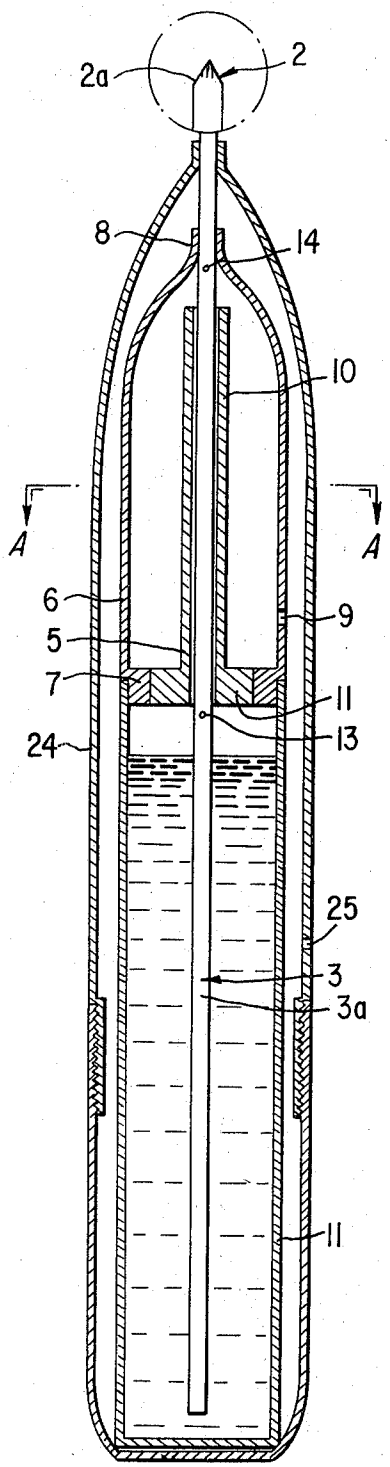

FIG. 2

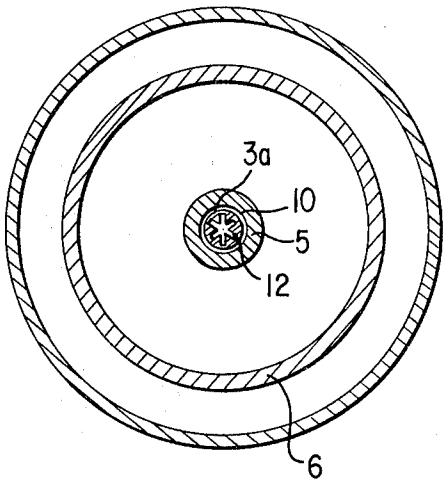

FIG. 3

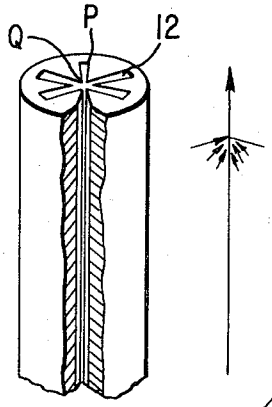

FIG. 6

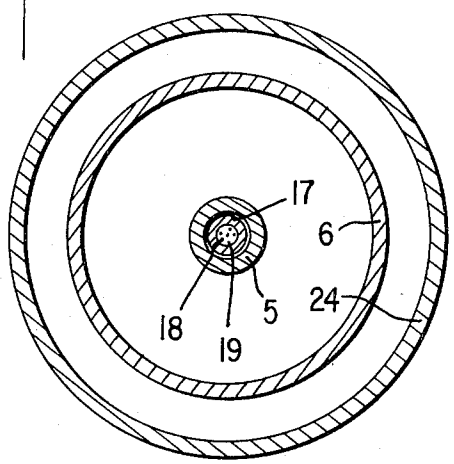

FIG. 4

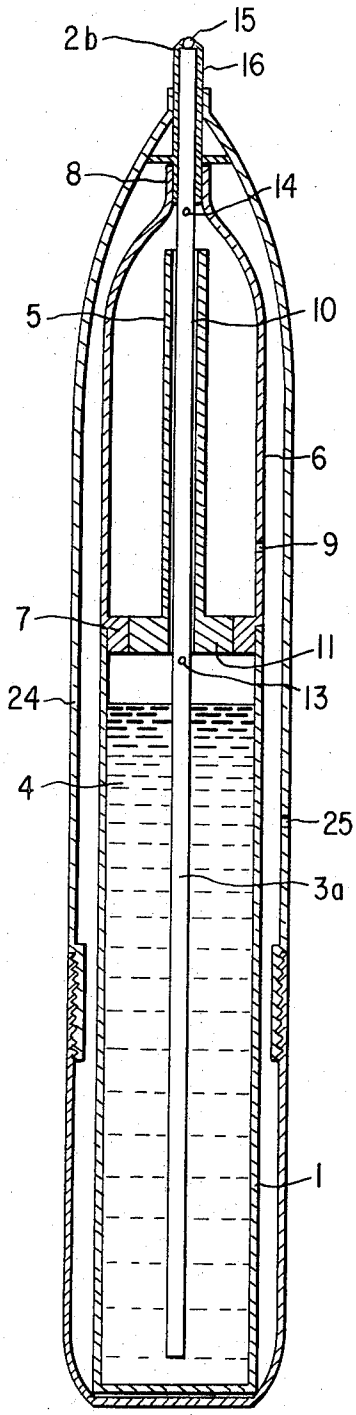
15
2b
16
8
14
5
10
6
9
7
11
24
13
4
25
3a
1

FIG. 5

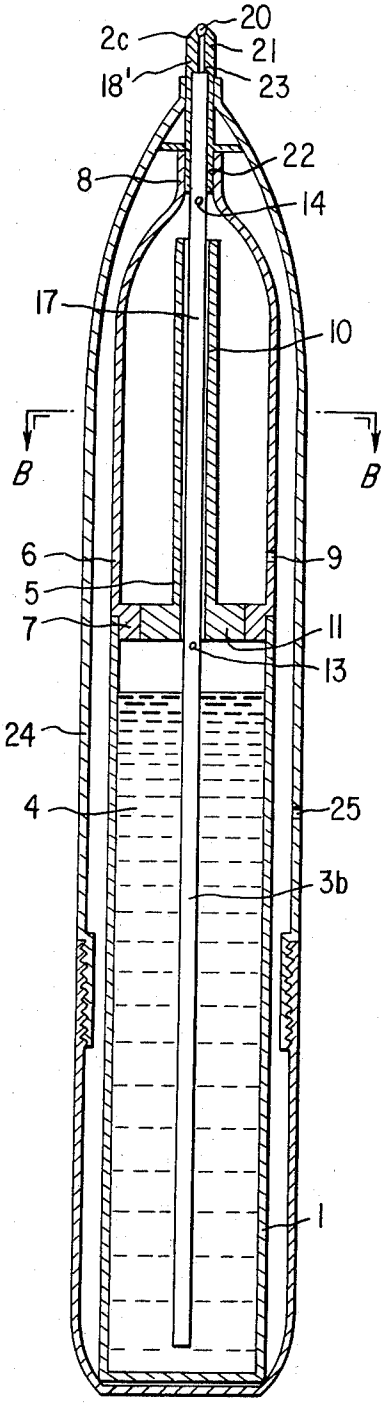
20
2c
21
18'
23
22
8
14
17
10
B
B
6
9
5
7
11
13
24
4
25
3b
1

WRITING INSTRUMENT FOR LOW-VISCOUS INK WITHOUT AN ABSORBING FIBROUS BUNDLE

BACKGROUND OF THE INVENTION

The present invention relates to writing instruments such as marking pens and ball-point pens having a reservoir which contains aqueous ink, alcoholic ink or like low-viscosity ink without using a conventional fibrous bundle.

With conventional writing instruments using aqueous ink or alcohol-containing ink, ink inevitably flows out in a drop or to excess during writing when the amount of outflow of ink undergoes minute variations due to changes in the atmospheric pressure and temperature. This is the most serious problem heretofore encountered with writing instruments of the above-mentioned type, unlike those for use with high-viscosity ink such as ball-point pens for oily ink. For example, the body temperature is transmitted during writing from the fingers to the pen barrel to expand the air or ink in the pen barrel, thereby causing excess outflow of ink from the pen tip or from various clearances in the ink channel. In order to avoid such trouble, conventional marking pens employ a fibrous bundle for absorbing and retaining ink. However, the amount of ink contained in the pen barrel as absorbed by the fibrous bundle is extremely limited and, moreover, only about 50% of the total amount of the ink is actually usable for writing. Furthermore, the known structure fails to assure sufficient flow of ink for rapid writing. Consequently, the pen of the type described readily runs short of ink and is serviceable only for a very short period of time. It is also known that usual fountain pens have a nib support element formed with several flutes for preventing excess outflow of ink. It is, however, impossible to incorporate such element into a marking pen or ball-point pen.

SUMMARY OF THE INVENTION

It is therefore a main object of this invention to provide a writing instrument for low-viscosity ink including a structure in which an ink reservoir containing a large amount of ink without employing a fibrous bundle communicates with the atmosphere free of any leakage of ink and which is capable of automatically replenishing the reservoir with air at a rate corresponding to the consumption of ink, the structure further being such that even in the event of a change in temperature or atmospheric pressure, expanded air or ink in the reservoir can be released through an opening other than the ink passageway while keeping the ink in the passageway free of any influence so as to eliminate any excess outflow of ink and to ensure smooth flow of ink at a constant rate all the time for a prolonged period.

Another problem encountered with writing instruments for use with low-viscosity ink is that bubbles are likely to be formed in the ink passageway and, once formed, they interfere with capillary action within the passageway, rendering the instrument no longer serviceable.

Accordingly, a further object of this invention is to provide a writing instrument for low-viscosity ink in which formation of bubbles in the ink passageway is prevented and bubbles, even if formed, will not completely impede the flow of ink through the passageway, making it possible to use the whole amount of ink in the reservoir without leaving any droplet of ink.

Other objects and features of the present invention will become more apparent from the following description of preferred embodiments of the invention with reference to the accompanying drawings.

BRIEF DESCRIPTION OF THE DRAWINGS

FIG. 1 is a longitudinal sectional view of a writing instrument embodying the present invention;

FIG. 2 is an enlarged view in section taken along the line A—A of FIG. 1;

FIG. 3 is an enlarged fragmentary perspective view showing an ink feeding conduit partly broken away;

FIG. 4 is a longitudinal sectional view showing another embodiment of this invention;

FIG. 5 is a longitudinal sectional view showing another embodiment of this invention; and

FIG. 6 is an enlarged view in section taken along the line B—B of FIG. 5.

DETAILED DESCRIPTION OF THE PREFERRED EMBODIMENTS

The writing instrument of this invention for a low-viscosity ink basically comprises a reservoir **1** which contains a large amount of ink without an ink absorbing fibrous bundle, a pen tip **2**, and an ink feeding conduit **3** connecting the reservoir **1** to the pen tip **2** so that ink **4** within the reservoir **1** is fed to the pen tip **2** by the capillary action of the ink feeding conduit. The instrument of this invention is characterized by a structure for substituting air for ink by which the ink reservoir is automatically replenished with an amount of air corresponding to the consumption of ink. This structure for substituting air for ink will first be described in detail.

An air admission inside tube **5** and an air admission outside tube **6** are usually molded of synthetic resin and cover the ink feeding conduit **3** extending between the front end of the reservoir **1** and the pen tip **2.** The air admission outside tube **6** has a connecting portion **7** at its back end, a constricted portion **8** at the front end thereof, and a port **9** at a rear portion thereof. The reservoir **1** is tightly fitted around the connecting portion **7,** and the constricted portion **8** firmly holds the ink feeding conduit **3.** The air admission inside tube **5** is smaller in diameter than the air admission outside tube **6.** Between the inner peripheral surface of the inside tube **5** and the outer peripheral surface of the outside tube **6,** there is formed a very small annular clearance **10** as an air passage, such that when the ink is introduced into the air passage **10,** a powerful capillary action will be produced therein. The inside tube **5** has a thick back end **11** which is tightly fitted in the back end of the air admission outside tube **6,** thereby keeping the back end of the air passage **10** open to the front end of the reservoir **1.** The front end of the annular passage **10** is open to the inner front portion of the air admission outside tube **6.** The clearance between the air admission inside tube **5** and the air admission outside tube **6** is formed as widely as possible so that ink will not be drawn by capillary action from the front portion to the rear portion of the air admission outside tube **6** even if a small amount of ink is deposited in the front portion of the tube **6.**

Various types of the ink feeding conduit **3** and the pen tip **2** will now be described in detail.

FIGS. **1** to **3** show an ink feeding conduit **3***a* made of a wear resistant material such as acetal resin and having a very fine ink passageway **12** which is accurately di-

mensioned and extends axially therethrough. When seen in cross section, the passageway **12** comprises a plurality of radial channels P each of which is tapered toward the center Q of the conduit **3***a* in the form of an elongated isosceles triangle, the channels P communicating with one another at their vertexes, i.e., at the center Q. The shape of the ink passageway **12** is not limited to that shown but the passageway may be of any shape insofar as it has a very small clearance which will induce a very effective capillary action, such that bubbles, if any in the ink, will not block up the passageway **12** to interrupt the flow of ink through the passageway **12.** Thus the constituent channel or the passageway must at least be noncircular in cross section. Especially in the case where the passageway **12** comprises a plurality of channels P which are in the form of an isosceles triangle and which communicate with one another at the center Q as in the present embodiment, the ink will be drawn toward a narrower portion. Consequently the ink flows three-dimensionally, i.e., in the axial direction and from the peripheral portions of the passageway toward the center in a plane perpendicular to the axial direction. This is the most preferable mode of supply of ink to the center of the pen tip. The ink feeding conduit **3** extends from a rear portion of the reservoir **1** to the pen tip **2** coaxially with the air admission inside tube **5** and the air admission outside tube **6.** A port **13** for releasing air and admitting ink is formed in the peripheral wall of the ink feeding conduit **3,** at a position in the front end of the reservoir **1.** The port **13** communicates with the ink passageway **12** and serves to release air (bubbles) from the passageway **12.** Through the port **13,** the ink in the front portion of the reservoir **1** is introduced into the passageway by the capillary action and vacuum of the interior of the passageway during writing. As a rule, the air and ink port **13** is positioned only in the front end of the reservoir **1.** However, another port may be formed in a portion of the conduit corresponding to the midportion or rear portion of the reservoir **1.** An auxiliary air and ink port **14** formed in the peripheral wall of the ink feeding conduit **3** is positioned in the front end of the air admission outside tube **6,** and has substantially the same function as the aforementioned air and ink port **13** in the reservoir **1** except that whereas the air and ink port **13** takes in the ink within the reservoir **1,** the auxiliary air and ink port **14** draws in the ink collected in the front portion of the air admission outside tube **6.** More specifically although the ink which has flowed into the air passage **10** is usually retained therein by surface tension since the air passage **10** is in the form of a minute clearance, some ink in the air passage **10** may possibly be deposited in the front portion of the air admission outside tube if the pen is left unused with its tip down. When the pen is then put to use, the ink is withdrawn from the front portion into the conduit **3** through the port **14.** The writing instrument is operable free of any trouble without the auxiliary port **14,** but experiments have revealed that the provision of the auxiliary port **14** permits the writing instrument to display superior performance.

The tip **2***a* shown in FIG. **1** is formed by cutting the end of the ink feeding conduit **3***a* into a conical shape. The ink passageway inside the conduit **3***a* is therefore exposed on the conical surface of the ink feeding conduit **3***a*, and ink flows through the ink passageway concentrically to the center Q at the pen tip **2***a*.

The ink feeding conduit **3***a* in FIG. **4** has the same construction as that illustrated in FIGS. **1** to **3.** As in the foregoing embodiment, the ink passageway **12** therein is not limited to the shape in which channels are arranged radially in cross section but may be of any cross sectional shape other than circular form insofar as the passageway will induce an effective capillary action and will not be blocked up with bubbles. The pen tip **2***b* of FIG. **4** comprises a ball-point pen tip **16** of metal or synthetic resin fitted around the front end of the ink feeding conduit **3***a*. The ball-point pen tip has a ball **15** in its top. The end surface of the ink feeding conduit **3***a* serves to seat the ball **15.** The ball-point pen tip may be of any construction if ink can be transferred from the feeding conduit onto paper.

The ink feeding conduit **3***b* in FIG. **5** comprises a slender tube **17** and several smooth-surfaced linear elements **18** such as nylon wires or stainless steel wires inserted in the tube **17** and extending over the entire length of the tube **17** to provide an ink passageway **19** in the form of minute clearances between the linear elements **18** and the peripheral inner surface of the tube **17** and amongst the linear elements themselves. In other respects, this ink feeding conduit **3***b* is identical to the ink feeding conduit **3***a* shown in FIG. **1.** The pen tip **2***c* in FIG. **5** comprises a ball-point pen tip **21** made of metal or synthetic resin and having a ball **20** in its top end and a rear portion **22** receiving the ink feeding conduit **3***b*. A small bore **23** is formed in the front portion of the tip **21.** A single element **18'** among the linear elements **18** within the ink feeding conduit **36** is inserted in the small bore **23,** with the end of the element **18'** in contact with the ball **20.** During writing, the rolling ball **20** shakes the linear element **18'** in contact therewith, thereby feeding ink from the conduit **3***b* onto the ball **20.**

In FIGS. **4** to **6,** indicated at **24** is a pen barrel and at **25,** an air port formed in a suitable portion of the pen barrel **24.** The reservoir **1** and the air admission outside tube **6** need not always be covered with the pen barrel **24.** Where an elongated reservoir is used and connected to the outside tube, the assembly serves as a pen barrel. In the drawings, the parts referred to by the same reference numerals and characters have the same construction and function in the same manner.

The reservoir **1** may be of the interchangeable or disposable cartridge type or may be adapted for replenishment.

When the reservoir **1** filled with ink is tightly fitted to the connecting portion **7** of the air admission outside tube **6,** the ink **4** is instantaneously introduced into the ink feeding conduit **3***a* or **3***b* from its rear end as well as through the air and ink port **13** and is fed to the pen tip **2***a*, **2***b* or **2***c* by powerful capillary action of the ink passageway **12** or **19,** while permitting air to escape from the ink passageway **12** or **19** through the air and ink port **13,** auxiliary port **14,** and pen tip. Even if air should remain in the ink passageway **12** or **19,** the air is in the form of fine bubbles and will not block up the entire cross sectional area of the passageway **12** or **19,** since the passageway **12** comprises radially arranged channels and is not circular in cross section, whilst the passageway **19** comprises clearances among several linear elements **18.** Thus the bubbles will in no way interrupt the flow of ink, permitting effective capillary action. When air is introduced into the ink feeding conduit **3***a* or **3***b* during writing, the conduit similarly func-

tions effectively to assure satisfactory capillary action. Inasmuch as the ink passageway **12** or **19** comprises minute channels or clearances as described above, the ink fed to the pen tip **2***a*, **2***b* or **2***c* is effectively retained in the ink passageway **12** or **19** by virtue of high surface tension when the pen is not in use. Furthermore, ink **4** is always kept in contact with the inlet of the ink feeding conduit **3***a* or **3***b* whether the pen is left for a long time in horizontal position or in upright position with its tip up, because the conduit **3***a* or **3***b* extends to the back end of the reservoir **1** and has the air and ink port **13** positioned in the front end of the reservoir **1.** Thus the pen tip **2***a*, **2***b* or **2***c* is wet with the ink all the time, ready for writing.

When the pen is put to use for writing, the friction of the pen tip **2***a*, **2***b* or **2***c* with paper and the ability of paper to absorb ink cause the ink to continuously flow out of the ink passageway **12** or **19** toward the pen tip, whilst the vacuum and capillarity in the interior of the ink feeding conduit **3***a* or **3***b* force the ink in reservoir **1** to flow into the passageway **12** or **19** from the rear end and/or the air and ink port **13** of the conduit. At a rate corresponding to the consumption of ink, air is supplied to the reservoir **1** from an air port **25** of the pen barrel **24,** through the port **9** of the air admission outside tube **6** and then through the annular passage of the air admission inside tube **5.** Thus substitution of air for ink can be effected smoothly.

The air passage **10** of the air admission inside tube **5** plays an important role in the foregoing operation. That is to say, during writing with the pen tip down, some of ink **4** flows into the annular passage **10** from its open rear end, but the annular passage which is in the form of the smallest possible clearance permits a high surface tension to act to effectively retain the ink therein. Consequently, hardly any ink will flow out into the air admission outside tube **6.** When the writing instrument is used, with the ink effectively retained within the annular passage **10,** a vacuum is created in the reservoir **1,** whereby air is introduced in the form of fine bubbles into the ink in the passage **10** by way of the ports already described and is eventually withdrawn into the reservoir **1** together with the ink.

Thus although the annular passage **10** is open to the front end of the reservoir **1,** the passage **10** which is a small clearance enables a high surface tension to act to retain the ink within the passage **10,** without allowing hardly any ink to flow into the outside tube **6** even if the pen is shaken forcibly. During writing, the vacuum produced in the reservoir draws air through the tube **6** into the reservoir in the form of fine bubbles along with the ink held in the annular passage **10.** In this way, the ink in the reservoir can be replaced by air without any trouble notwithstanding that the annular passage **10** is blocked with ink. Although the air passage **10** at the front end of the reservoir communicates with the atmosphere, the annular passage functions to assure substitution of air for ink without permitting ink to leak out. This is the most distinct feature of this invention.

Furthermore, even if some of ink retained in the passage **10** should be deposited in the front portion of the air admission outside tube **6,** the ink will be drawn into the ink feeding conduit **3***a* or **3***b* during writing, if the anxiliary air and ink port **14** is formed in the conduit at that position.

The air in the reservoir may expand due to changes in temperature or atmospheric pressure, but some air can be released through the annular passage **10,** thereby preventing excess outflow of ink. For the same reason, insufficient flow of ink can be avoided in the event of contraction of air in the reservoir.

The air and ink port **13** formed in the ink feeding conduit **3***a* or **3***b* and positioned in the front end of the reservoir **1** makes it possible to use up the ink in the reservoir without leaving almost any droplet of ink.

I claim:

1. A writing instrument for low-viscous ink comprising a pen tip, a reservoir containing said ink without employing an ink absorbing fibrous bundle, an ink feeding conduit extending from said pen tip into said reservoir to its rear portion and having an inner ink passageway extending throughout the entire length thereof, said conduit having in its peripheral wall a port positioned in the front end of said reservoir and permitting said ink passageway to communicate with the interior of said reservoir, an air admission inside tube covering said conduit and forming an annular air passage between the inner peripheral surface of said air admission inside tube and the outer peripheral surface of said conduit which annular passage permits capillary action therein, an air admission outside tube covering both said conduit and said inside tube and being closed at its opposite ends so that a sufficiently large space is formed between said inside and outside tubes to prevent ink from being drawn by capillary action from the front portion of said outside tube toward its rear portion, said air admission outside tube having in its rear portion an air port for permitting the interior of said air admission outside tube to communicate with the atmosphere, said annular air passage having a front end open to the front portion of said outside tube and a rear end open to the front end of said reservoir, whereby the ink in said reservoir is rendered replaceable by air.

2. A writing instrument for low-viscous ink according to claim **1,** in which said ink passageway comprises a plurality of channels radially arranged in cross section and communicating with each other at the center of the passageway.

3. A writing instrument for low-viscous ink according to claim **2,** in which said ink feeding conduit is made of synthetic resin.

4. A writing instrument for low-viscous ink according to claim **3,** in which the front end of said ink feeding conduit is conically cut to serve as said pen tip.

5. A writing instrument for low-viscous ink according to claim **4,** in which said ink feeding conduit has a port formed in the peripheral wall thereof and positioned in the front end of said air admission outside tube, the ink passageway communicating with the space between said inside and outside tubes through said port.

6. A writing instrument for low-viscous ink according to claim **5,** in which the front end of said ink feeding conduit has a ball-point pen tip fitted therein and serving as said pen tip.

7. A writing instrument for low-viscous ink according to claim **1** in which several linear elements are inserted into the ink feeding conduit, said ink passageway comprising the clearances among said linear elements, and the front end of said conduit has a ball-point pen tip serving as said pen tip.

* * * * *