April 12, 1932. G. O. DEGENER 1,853,303

MANIFOLDING DEVICE

Original Filed Sept. 3, 1926 4 Sheets-Sheet 1

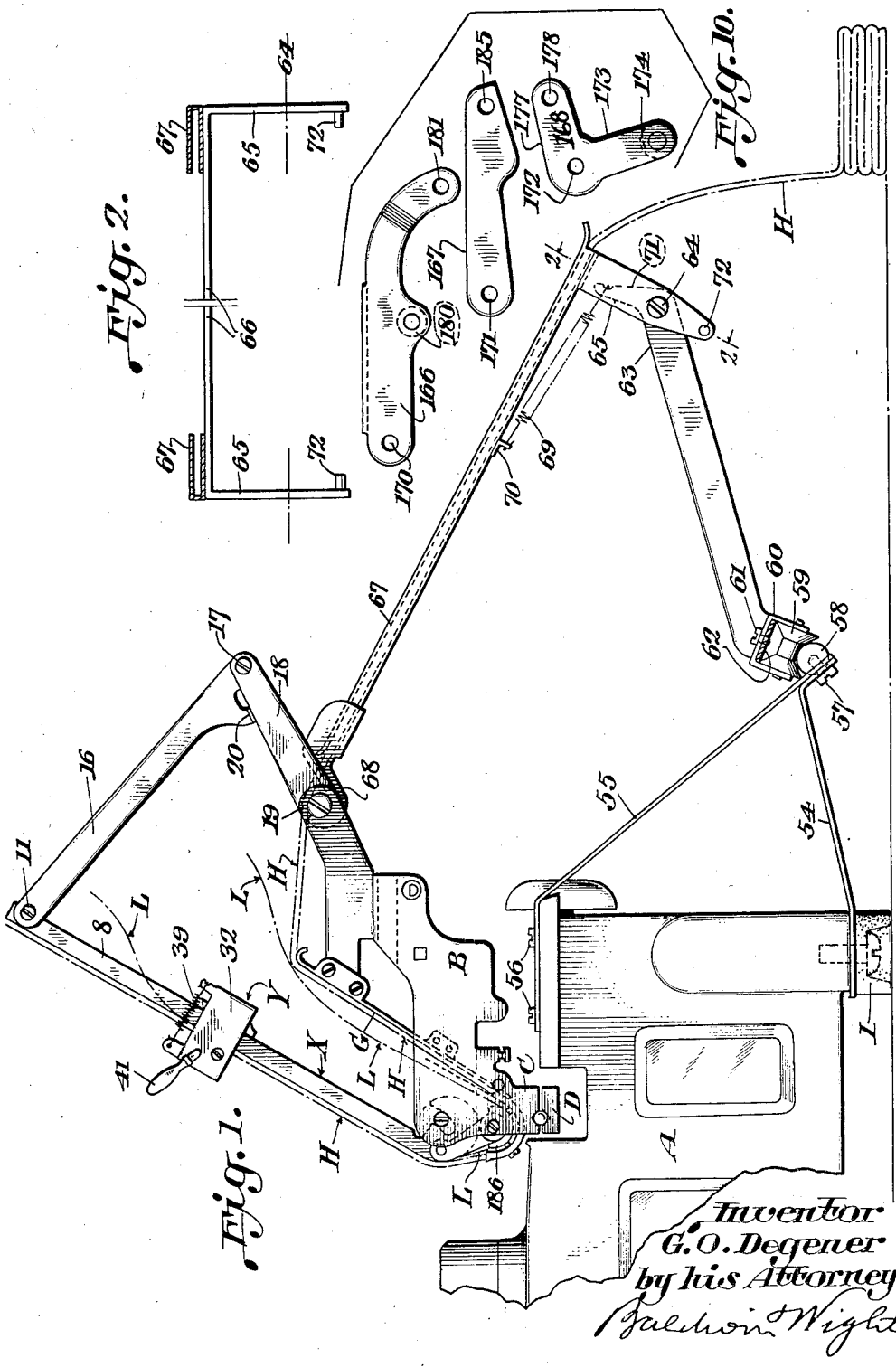

April 12, 1932. G. O. DEGENER 1,853,303

MANIFOLDING DEVICE

Original Filed Sept. 3, 1926 4 Sheets-Sheet 2

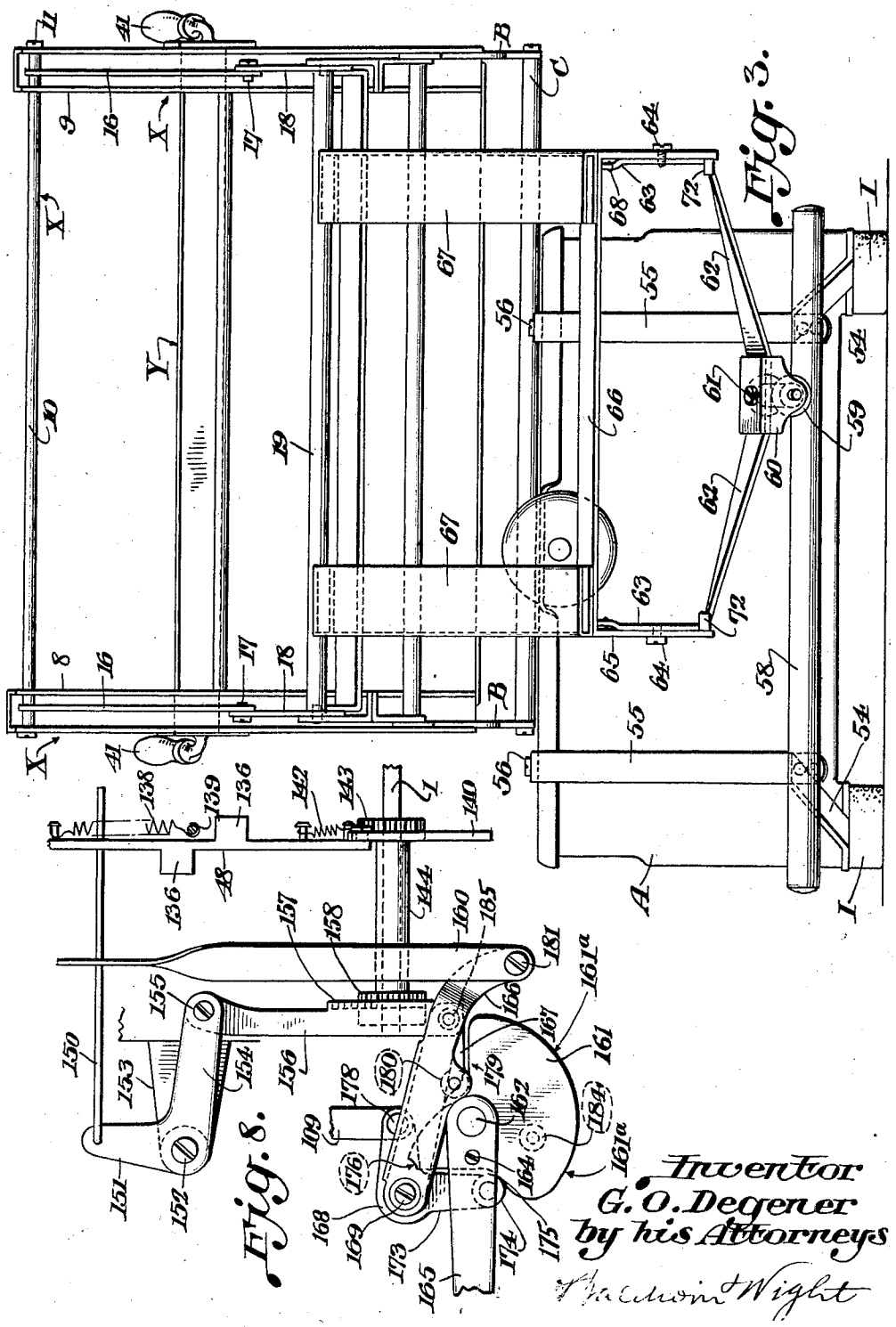

Fig. 3.

Fig. 8.

Inventor
G. O. Degener
by his Attorneys
Pinckney & Wright

April 12, 1932. G. O. DEGENER 1,853,303

MANIFOLDING DEVICE

Original Filed Sept. 3, 1926 4 Sheets-Sheet 3

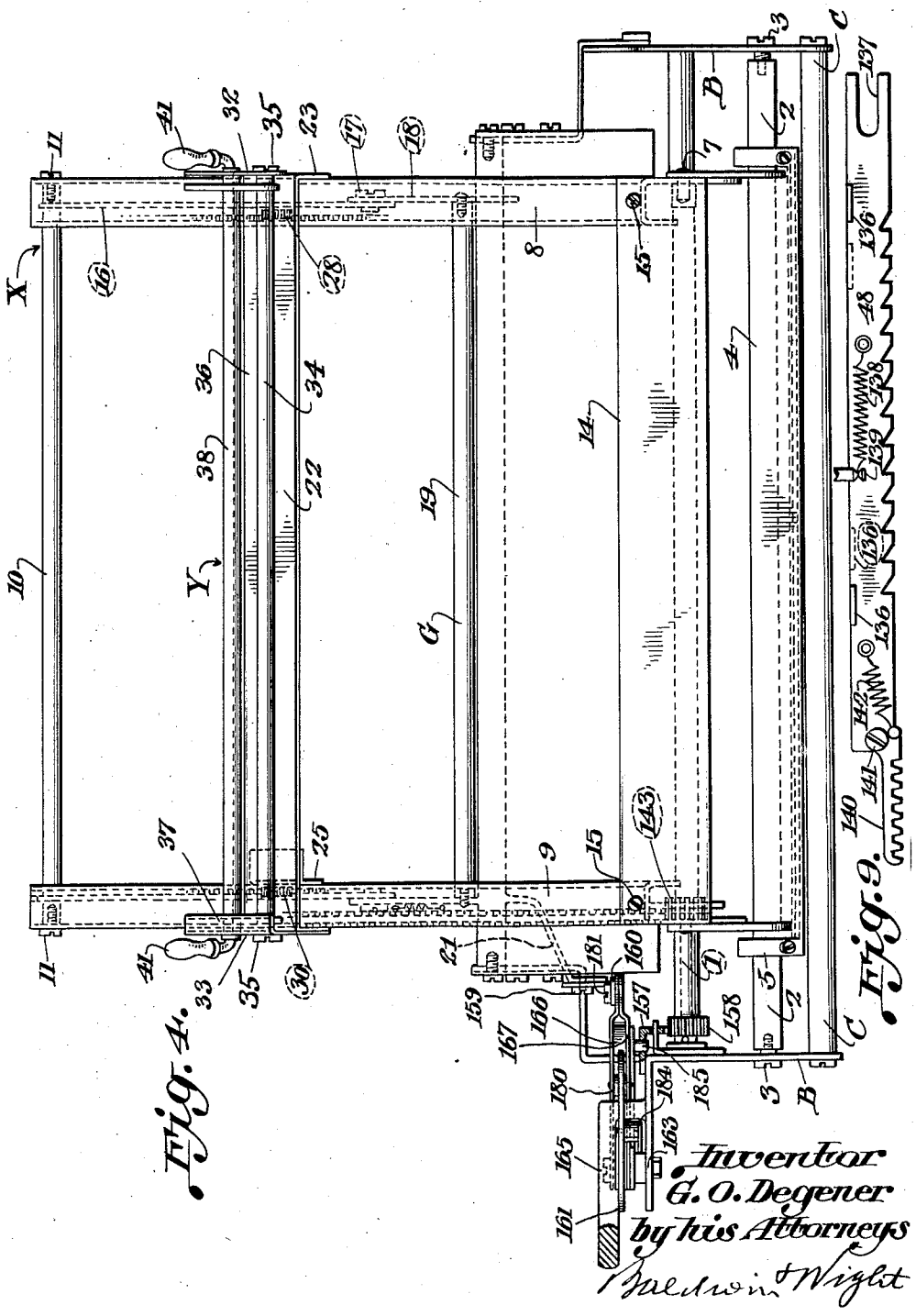

Fig. 4.

Fig. 9.

Inventor
G. O. Degener
by his Attorneys
Baldwin & Wright

April 12, 1932. G. O. DEGENER 1,853,303

MANIFOLDING DEVICE

Original Filed Sept. 3, 1926 4 Sheets-Sheet 4

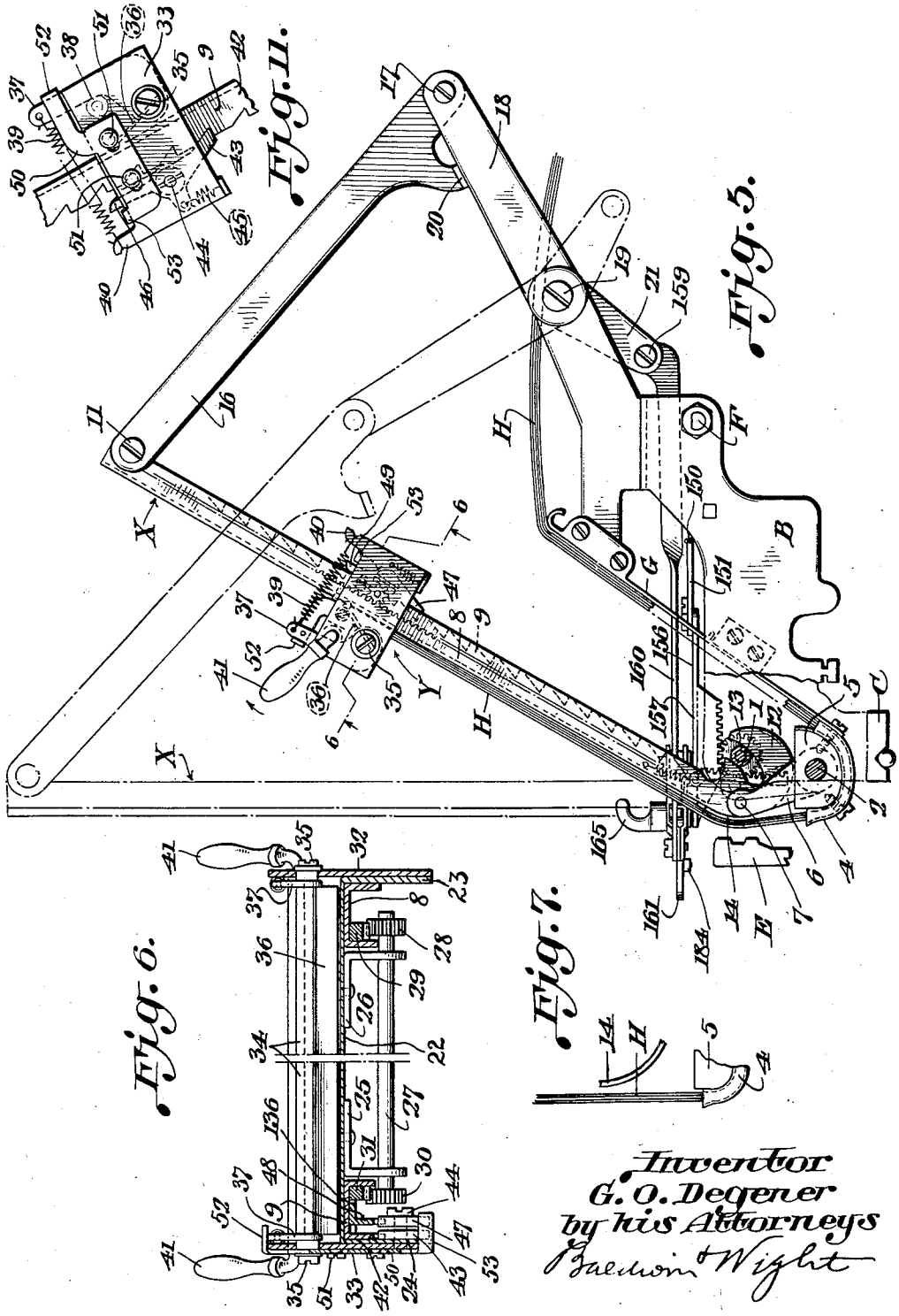

Fig. 11.

Fig. 5.

Fig. 6.

Fig. 7.

Inventor
G. O. Degener
by his Attorneys
Baldwin & Wight

Patented Apr. 12, 1932 1,853,303

UNITED STATES PATENT OFFICE

GUSTAVE O. DEGENER, OF SAN FRANCISCO, CALIFORNIA, ASSIGNOR TO ROYAL TYPEWRITER COMPANY, INC., OF NEW YORK, N. Y., A CORPORATION OF NEW YORK

MANIFOLDING DEVICE

Original application filed September 3, 1926, Serial No. 133,437. Divided and this application filed May 25, 1927. Serial No. 194,135.

This is a division of my application Serial No. 133,437 filed Sept. 3, 1926.

An object of this invention is to provide an improved construction which may be attached to any standard typewriting machine without much modification in the machine itself, for the purpose of writing on continuous billing forms which are frequently fed to the machine in lengths of several hundred feet.

Another object of my invention is to provide means for positioning the webs and carbon strips in tight contact relation against the curved printing line of the platen preparatory to certain printing operations whereby clear impressions will be made on the various webs, and to relieve the tight contact relation between the webs and the carbon strips, and the platen, prior to feeding or line spacing movements of the webs whereby said webs will be disposed in a substantially flat condition while being fed freely relative to the platen and without dragging the transversely extending carbon strips therewith.

The invention herein claimed includes means for feeding these forms or work sheets upwardly past a guide, thence past the platen, and thence upwardly over a frame which extends upwardly from the delivery side of the platen. The leading ends of the work sheets are carried in a truck or holder which travels on the frame for line spacing said sheets. When a form has been completed, the truck may be released from the sheets and moved down to starting position, after which the completed form is severed.

The invention also provides means whereby the supporting frame above referred to may be moved forwardly from a rearwardly inclined position to a vertical position and the platen simultaneously moved slightly to the rear in order to relieve the tight contact between the work sheets and the platen by bringing the work sheets out of contact with the platen and to a substantially vertical position preliminary to the line space movement in order to facilitate the easy feeding of the work sheets.

In the parent application the particular paper feeding mechanism herein disclosed and claimed is illustrated in connection with a particular form of carbon strip feeding device, but it is not limited in its application thereto but may be employed with other forms of duplicating mechanism such as carbon sheets, auxiliary ribbons, or the like.

The invention is also illustrated as applied to the well known standard Royal machine, but obviously is capable of application to other types of machines. It is not necessarily limited to a typewriting machine but may be applied to a combined typewriting and computing machine or other machines of this general character.

In the drawings:

Figure 1 is a side elevation of the device applied to a typewriting machine and embodying one form of work sheet feeding means, the operating mechanism for swinging the frame and for actuating the line spacing mechanism, also the auxiliary ribbon feeding devices, being omitted.

Figure 2 is a section on the line 2—2 of Figure 1.

Figure 3 is a rear view of the construction shown in Figure 1, the specific step-by-step mechanism for line spacing the truck being omitted.

Figure 4 is a front elevation of the device attached to the carriage of a typewriting machine.

Figure 5 is a fore and aft section through the device as shown in Figure 4 but illustrates a modified form of work sheet feeding means.

Figure 6 is a section on the line 6—6 of Figure 5.

Figure 7 is a fragmentary view showing the relation of the work sheets to the platen when the frame is in vertical position.

Figure 8 is a plan view of a portion of the mechanism at the left hand side of the machine showing part of the operating means for line spacing the work sheets and for swinging the frame.

Figure 9 is a side view of a detent bar forming a part of the line spacing mechanism for the work sheets.

Figure 10 is a disassembled view of various

parts of the hand controlled mechanism for operating the various instrumentalities.

Figure 11 is a view from the left hand side of Figure 6 on an enlarged scale, showing the means for releasing the truck and the detent feeding mechanism.

As previously stated, the invention may be embodied in various types of typewriting machines and there has accordingly been illustrated only enough of the usual typewriting machine to show the position of the mechanism comprising this invention with relation thereto. The drawings illustrate a main frame A, a carriage having side plates B, the carriage having a rail C which is adapted to travel upon a main rail D by means of interposed ball bearings. A type bar E is illustrated in the position which it occupies just prior to printing. A tabular stop rod F is carried by the side frame B of the carriage and is of the usual construction. A paper table G is or may be of the usual construction and the work sheets H are fed thereover to the platen.

The usual platen is removed, but the platen shaft or axle 1 is retained and is journalled in the side frames of the carriage. Below this the shaft 2 is also attached by screws 3 to the side frames, and a chute 4 or guide is fastened to blocks 5 which are carried on the shaft 2. At each side of the machine and just inside the blocks 5 is an arm 6. At the right hand side of the machine the arm 6 is pivoted at 7 to an inverted U-shaped or channel-shaped bar or member 8 and at the left hand side of the machine, the other arm 6 is similarly pivoted to a similar channel member or bar 9. These two side members or bars are connected at their top by screws 11 to a rod 10. The arms 6, side or channel members 8 and 9, and rod 10, therefore, constitute a supporting frame X and since the members 8 and 9 are pivoted to the arms 6, it is obvious that the frame may be swung about this pivot point. The outside flange of each channel member 8 and 9 has at its lower end an extension 12 clearly shown in Figure 5 provided with an arc-shaped slot 13 which engages the platen axle 1. A non-rotatable platen 14 having a curved printing face is preferably formed of brass or similar metal, and is attached by screws 15 to the channel members 8 and 9. As shown in Figure 5, the work sheets H are fed over the paper table G, thence along the chute or guide 4 and thence upwardly over past the platen 14 and lie upon the frame at the delivery side of the platen.

The same screws 11 which attach the rod 10 to the side bars of the frame X also fasten to said frame the upper ends of links 16 which are pivoted at their lower ends at 17 to arms 18 mounted on a rod 19 extending from one side to the other of the work sheet supporting frame. Each link 16 has an offset lug 20 adapted to engage the associated arm 18 when the parts are in the operated or full line position of Figure 5. The rod 19 has a downwardly extending arm 21, the purpose of which will be hereinafter set forth.

From the foregoing it will be observed that the frame X is pivoted at its lower end to swing rearwardly to a rearwardly inclined position and forwardly to a substantially vertical position, and that the platen 14 is fixed to the lower end of the frame to move therewith whereby the platen will be bodily moved rearwardly a slight distance when the frame is swung forwardly and moved forwardly to its original position when the frame is swung rearwardly.

Supported on the frame X for movements toward and from the platen is a truck or holder Y having means for clamping the leading ends of the work sheets thereto. This truck or holder Y is normally located at the lower end of the frame X and means is provided for moving the truck or holder Y upwardly along the frame in a step-by-step manner to impart line spacing movements to the work sheets. This line spacing mechanism is operable when the frame X is in its forward or vertical position only. Thus prior to the line spacing operation of the work sheets, the platen has been moved rearwardly a distance sufficient to relieve the tight contact relation between the work sheets and the curved printing face of the platen 14. In other words, when the frame X is in its vertical position, the work sheets are substantially free of contact with the platen and consequently these work sheets may be line spaced without dragging the same against the platen and without dragging the transversely extending carbon strips upwardly therewith. When the frame X is in its rearwardly inclined position, the type bars are operated. In this position of the frame X, the work sheets and carbon strips are caused to tightly contact the curved printing face of the platen 14 whereby the work sheets and the carbon strips will be disposed in a compacted relation to insure clearness of print on the various sheets. Thus in one position, the work sheets are arranged in substantially flat relation for line spacing operation, and in another position these work sheets are curved about the curved printing face of the platen preparatory to printing by the type bars.

The truck or holder Y includes a flat plate 22 which is positioned on the upper side of the members 8 and 9 and has downward extensions 23 and 24 respectively fitting on the outside of these channel members. This plate 22 constitutes a relatively stationary clamp bar and is provided on its under side (see Figure 6) with two brackets 25 and 26 in the depending arms of which is supported a shaft 27 which has at one end a pinion 28 meshing with a rack 29 on the inside of the channel

bar 8. At the other end the shaft 27 has a pinion 30 meshing with a similar rack bar 31 carried by the channel member 9. The purpose of the shaft and rack and pinion connections is to cause the truck Y to travel along the channel bars 8 and 9 of the frame X without binding.

Lying outside the extensions 23 and 24 and attached thereto in any desired manner, are plates 32 and 33 respectively which extend upward above the surface of the plate 22. These plates 32 and 33 are connected by a pivot shaft 34 attached thereto by screws 35 and this shaft carries a clamp member or movable clamp bar 36. The work sheets are adapted to be passed between this clamp member or bar 36 and the surface of the relatively stationary clamp bar 22.

Mounted on the shaft 34 at each side, but inside the plates 32 and 33, is an arm 37 which is normally drawn against a stop rod 38 by means of a spring 39 which is fastened at one end to the arm 37 and hooked at the other end over a projection 40. The rod 38 is provided with cam portions (see Figure 11) which bear against the arms 37 and this rod may be rocked against the tension of the spring 39 by means of handles 41. When the rod 38 is rocked in one direction the cam portions will move the clamp member 36 away from the surface of the plate 22 and release the work sheets so that the truck Y and work sheets may be moved independently and when, rocked in the opposite direction the springs 39 will automatically return the plate 36 to its initial position.

At the left hand side of the frame X the outside flange 42 of the channel bar 9 is provided with teeth or notches in which is adapted to engage a pawl 43 pivotally supported at 44 and normally drawn to operative position by a spring 45. This pawl has an upwardly extending tail 46. A similar pawl 47 is carried by the same pivot 44 and engages notches formed in a bar 48 illustrated separately in Figure 9. The function of this bar will be hereinafter described. This pawl 47 also has an upwardly extending tail 49 as shown in Figure 5.

Referring to Figure 11 there is disclosed a sliding plate 50 mounted on the side plate 33 by means of pins 51 entering slots in the plate 50. This plate has an offset ear 52 which lies outside the lever 37 and also a second offset ear 53 at the other end which lies outside of the tails 46 and 49 of the pawls 43 and 47. When the handles 41 are moved to rock the stop rod 38 and move the arm 37 to release the truck Y, it is obvious that the movement of this arm or lever 37 will produce a sliding movement of the plate 50 through engagement with the ear 52 thereof and that in such sliding movement the ear 53 will engage the tails of the pawls 43 and 47 and move them out of operative engagement with their respective racks or notched bars. In this manner the movement of the arm or lever 37 not only releases the truck Y from the work sheets but releases the truck from the supporting frame so that the former may be moved downward until it substantially contacts with the platen.

In the form of the device shown in Figure 5 the work sheets H are fed over the rod 19 from the desired source of supply. In the preferred form of the invention shown in Figures 1 to 3, a different form for feeding the work sheets is provided.

Arms 54 which are attached to the main frame A of the machine by the same screws which hold the feet I in position, extend rearwardly and other bracket arms 55 which are attached to the top plate of the main frame A by screws 56 extend downwardly so that the free end of each arm 54 will lie adjacent the free end of the corresponding arm 55. Screws 57 attach each pair of arms together and also are threaded into a track rail 58, thus supporting the same.

A roller 59 which travels on said track rail is carried by a U-shaped bracket member 60 which is attached by a screw 61 to the generally horizontal portion 62 of a U-shaped member. The upwardly extending arms 63 of this member are pivoted by screws 64 to downwardly extending arms 65 which depend from the plate member 66 (see Figure 2). This plate supports at its outer edge channel shaped members 67, the open sides of which face each other and these members are provided at their upper ends with hook members 68 which engage the under side of the rod 19. At each side a spring 69 is attached at one end to an anchorage 70 on the member 67 and at its other end is hooked over an upward projection 71 of the arm 63. It is obvious that this spring exerts its force to hold the hook 68 in contact with the rod 19 and the roller 59 in engagement with the track rail 58. Projections 72 on the lower end of the arm 65 limit the movement of the arms 65 and 63 in one direction.

As stated above, a step-by-step movement of the truck or holder Y relative to the frame X for the purpose of giving line space movement to the work sheets is brought about by moving the notched bar 48. This bar has lugs 136 at each side thereof, the lugs on one side contacting with the rack bar 31, and the lugs on the other side with the outside wall of the channel bar 9 as shown in Figure 6. These lugs guide the notched bar in its to and fro movement. The free end thereof is provided with a notch 137 which fits over a pin extending between the walls of the channel bar 9. A spring 138 is attached at one end to the bar 48 and at its other end to a fixed part 139 and serves to return the bar after the upward movement thereof. To the lower end of the bar 48 a short rack 140 is pivoted at 141 and

is normally maintained in one position by a spring 142 attached to the rack at one end and at its other end to the bar 48. This rack 140 meshes with a pinion 143 carried on one end of a short sleeve 144 which is loosely mounted on the platen shaft 1. It will be obvious that when the pinion 143 is rotated, it will give an upward movement to the bar 48 and the engagement of the notches of this bar 48 with the pawl 47 will move the truck or holder Y upward one line space distance. The truck will then be retained in its new position by the pawl 43 and the spring 138 will act to return the notched bar 48 to its starting point.

For convenience of illustration and in order that the relation of the various parts may be the same in this divisional case as in the parent application, there are shown in Figures 8 and 10 certain elements which are not a part of the paper feeding devices herein claimed. Figure 8 discloses one end of a link 150 which has the function of feeding the carbon strips and is connected to one arm 151 of a bell crank lever pivoted at 152 to a bracket arm 153 extending from the carriage frame. The other arm 154 of this lever is pivoted at 155 to a link 156 which is provided at one side with a short rack 157 which meshes with a pinion 158 on the sleeve 144 above mentioned.

The arm 21 best shown in Figure 5, which extends from the rod or rack shaft 19, is pivoted at its free end at 159 to a forwardly extending link 160. When this link is moved rearwardly, the arm 21 rocks the shaft 19 and moves the arms 18 and 16 as well as the supporting frame X to the dotted line position of Figure 5, in which the sheet supporting frame is substantially vertical. At the same time the pivot point 7 of the frame and the arm 6 move slightly to the rear, being guided by engagement of the slot 13 with the platen axle 1 so that the platen 14 moves slightly away from or out of contact with the work sheets H. The relative position of the work sheets and platen is illustrated in Figure 7.

The construction by which the various operations of swinging the frame to its vertical position and line spacing the work sheets are performed in their proper sequence will now be described.

This operating mechanism will be described with particular reference to Figures 4, 8 and 10. A flat cam member 161 is pivotally supported at 162 upon a bracket 163 extending from one side bar of the carriage. Fastened thereto by a screw 164 is a lever 165 which corresponds in general location and shape to the usual carriage return lever of a typewriting machine. Three levers 166, 167, and 168, shown separately in Figure 10, are pivoted at 169 upon an extension of the bracket 163. This pivot pin 169 passes through an opening 170 in one end of the lever 166, an opening 171 in one end of the lever 167, and an opening 172 in the lever 168 which is a bell crank lever. One arm 173 of this bell crank lever has a roller 174 which normally engages the portion 175 of the cam 161.

During the movement of the lever 165 to the right, a cam portion 179 which is in engagement with a roller 180 carried by the lever 166, will swing this lever rearwardly and since the outer end thereof is connected at 181 to the link 160, this movement will swing the frame forwardly to the vertical or dotted line position of Figure 5. This movement will place the work sheets in a substantially vertical position and separate them from the platen as indicated in Figure 7.

In the continued movement of the lever 165 in the same direction, a roller 184 carried by the under side of the cam 161 will come into engagement with the lever 167. This lever is pivoted at 185 to the link 156 and the movement thereof will, therefore, through the rack 157, sleeve 144, and pinion 143, operate to line space the truck Y. During this period of line spacing, the roller 180 engages the concentric peripheral portion 161[a] of the cam 161, to maintain the frame X in its vertical position.

Substantially at the same time that these operations are taking place, the carriage will be returned to the right hand side of the machine and the work sheets will be in a position to begin a new line of writing.

The lever 165 is then swung to the left, this movement causing the frame X to be swung rearwardly and the platen 14 to be swung forwardly into tight contact relation with the work sheets H. This movement of the lever 165 returns the bar 48 to its normal position preparatory to another line spacing operation.

The operation of the paper feed mechanism may be briefly recapitulated as follows. Assuming that a plurality of work sheets have been fed over the paper table and through the chute or guide 4 and have their leading ends clamped in the truck Y which is located in its lowest position on the frame X, the machine will be ready for operation. A line will be written in the usual manner. Thereafter the operator swings the lever 165 and the first movement thereof swings the supporting frame X to its vertical position which position causes the platen 14 to be moved rearwardly from the work sheets, while a continued movement of the lever 165 will line space the work sheets and return the carriage. These operations all take place upon the movement of a lever which it is necessary to operate to return the carriage in the ordinary machine.

When the form has been completed and the clamp member has reached an upper position, such as shown in Figure 5, a movement of the handle 41 will release the truck Y

from the paper and also release the pawls from the side bars 8 and 9 whereupon the truck may be moved downwardly to its lowest position during which movement the leading edge of the work sheets will be held by hand. At this time it is preferable to have the lever 165 move to such position that the roller 174 rests in a seat 176 (see Figure 8) which holds the frame in vertical position. The work sheets are then pulled through the truck a slight distance until the lower end of the first form registers with the edge of the clamp bar 36 of the truck, when they are torn off, using this clamp bar 36 as a knife edge. The machine is then in position to begin writing on a second form.

From the foregoing, it will be observed that the purpose for moving the supporting frame to a vertical position is to release all binds or friction between the several carbon ribbons and the several work sheets which is induced by these two elements being bent around the front face of the platen 14 to bring them in close contact therewith and also in close contact with each other, which is necessary for the best printing results, and by the movement of the work sheets to a vertical position, the arc formed at the printing point where the work passes over the platen is straightened out, thus releasing any bind or friction between the carbon and sheets and preventing the ribbons from being broken.

There may be combined with the invention thus far described a separate work sheet L for use in what is frequently known as condensed billing. This work sheet will be fed around the platen and through a separate chute 186 (see Figure 1) so that adjustment of the continuous work sheets may be obtained without displacement of the record sheet.

The leading end of the record sheet L is clamped in position by the same truck which holds the leading ends of the continuous work sheets. After a bill has been written, the truck is released and dropped as previously described. Thereafter the continuous sheets will be pulled through the machine a short distance in order to permit the first bill to be drawn off. This movement does not disturb the record sheet L. Therefore, when the second bill is written in the usual manner, the first line of writing thereon will be recorded on the record sheet on the very next line from the last line of the previously written bill. A condensed record is, therefore, obtained. When the record sheet is filled, a second sheet can be inserted in the usual manner after the first is removed by releasing the clamp therefrom.

Various features of the invention are broader than the specific form illustrated. Instead of returning the carriage and performing the other operations by a manually operated lever, the same might be operated by power mechanism.

So far as the paper feeding mechanism broadly stated is concerned, any desired form of ribbon mechanism may be employed therewith. The invention is, therefore, to be regarded as limited only by the scope of the appended claims.

I claim as my invention:

1. In a manifolding device, a platen over which work sheets are fed, a clamp for the leading ends of said work sheets, an inclined frame over which said clamp moves for line spacing, means for moving the frame to a vertical position preliminary to the line space movement, means for giving said clamp a line space movement, and a single manually operated element for controlling said movements in sequence.

2. In a manifolding device, a platen over which work sheets are fed, an inclined frame over which the work sheets travel in their line space movement, and means for swinging the frame to a vertical position and moving the platen out of contact with the sheets preliminary to a line space movement.

3. In a manifolding device, a platen over which work sheets are fed, an inclined frame over which the work sheets travel in their line space movement, means for swinging the frame to a vertical position and moving the platen out of contact with the sheets preliminary to a line space movement, and means independent of the platen for line spacing the work sheets.

4. In a manifolding device, a platen over which work sheets are fed, a chute through which they pass before contacting with the platen, an inclined frame over which they travel after leaving the platen, and means for moving said frame to a vertical position and said platen out of contact with the sheets.

5. In a manifolding device, a platen over which work sheets are fed, a chute through which they pass before contacting with the platen, an inclined frame over which they travel after leaving the platen, means carried by said frame for holding the leading ends of the sheets, and means for moving the frame to a vertical position and the platen out of contact with the sheets so that these lie in a vertical plane extending from the chute to the holding means.

6. In a manifolding device, a platen over which work sheets are fed, a guide for said sheets below the platen, holding means for the leading ends of the sheets, and means for swinging the sheets and platen apart so that the sheets lie in a vertical plane extending from the guide to the holding means and are out of contact with the platen.

7. In a manifolding device, a platen over which work sheets are fed, a guide for said sheets below the platen, holding means for the leading ends of the sheets, means for

swinging the sheets and platen apart so that the sheets lie in a vertical plane extending from the guide to the holding means and are out of contact with the platen, and means for thereafter line spacing said sheets.

8. In a manifolding device, a platen over which work sheets are fed, a guide for said sheets below the platen, holding means for the leading ends of the sheets, means for swinging the sheets and platen apart so that the sheets lie in a vertical plane extending from the guide to the holding means and are out of contact with the platen, and means for thereafter line spacing said sheets, said swinging means and line spacing means being controlled by a single manually operable element.

9. In a manifolding device, an inclined frame over which travels a plurality of work sheets after they pass the printing line, a shaft near the lower end of the frame, arms on said shaft to which the frame is pivotally connected, a platen carried by said frame, and means for swinging the frame to a vertical position and said platen rearwardly from its normal position.

10. In a manifolding device, an inclined frame over which travels a plurality of work sheets after they pass the printing line, a shaft near the lower end of the frame, arms thereon, to which the frame is pivotally connected, a platen carried by the lower end of the frame, and means for swinging the lower end of the frame about the axis of the shaft and thereby moving the platen slightly to the rear of its normal position.

11. In a manifolding device, a platen over which work sheets are fed, a frame over which the sheets travel for line space movement, a clamp for the leading end of the sheets, detents carried by said clamp, a fixed toothed bar engaging one detent, a movable toothed bar engaging the other detent, and means for moving the movable bar to move the clamp step by step for line spacing.

12. In a manifolding device, a platen over which work sheets are fed, a frame over which the sheets travel for line space movement, a clamp for the leading end of the sheets, detents carried by said clamp, a fixed toothed bar engaging one detent, a movable toothed bar engaging the other detent, means for moving the movable bar to move the clamp step by step for line spacing, and means for releasing both detents from their associated toothed bars.

13. In a manifolding device, a platen over which work sheets are fed, a frame over which the sheets travel for line space movement, a clamp for the leading end of the sheets, detents carried by said clamp, a fixed toothed bar engaging one detent, a movable toothed bar engaging the other detent, means for moving the movable bar to move the clamp step by step for line spacing, means for releasing both detents from their associated toothed bars, and means for simultaneously releasing the clamp.

14. In a manifolding device, a frame over which travels a plurality of work sheets after they pass the printing line, a clamp for the leading ends of the work sheets, means for giving the clamp a step-by-step movement over the frame to line space the sheets, means for releasing the clamp from its operating means, and means for simultaneously releasing the clamp from the work sheets.

15. In a manifolding device for typewriting and similar machines, a travelling carriage, a fixed rail carried by the frame of the machine, a rail on the carriage, a work sheet supporting frame comprising two main elements, one of which has a roller running on the fixed rail and the other of which has means engaging the rail on the carriage, spring means holding said elements in engaging operative position, and a chute engaging the edges of the work sheets and carried by one of said elements.

16. In a manifolding device, a platen over which work sheets are fed, a rearwardly inclined supporting frame pivotally supported at its lower end adjacent the platen and over which the forward end portion of the work sheets travels after leaving the platen, means for line spacing said forward end portion of the work sheets, a guide for the work sheets located below the platen, and means for swinging said supporting frame to a substantially vertical position preliminary to the line spacing movement to relieve the work sheets from frictional engagement with the platen.

17. In a manifolding device, a platen over which work sheets are fed, a rearwardly inclined supporting frame pivotally supported at its lower end adjacent the platen and over which the forward end portion of the work sheets travels after leaving the platen, means for line spacing said forward end portion of the work sheets, a guide for the work sheets located below the platen, means for swinging said supporting frame to a substantially vertical position preliminary to the line spacing movement to relieve the work sheets from frictional engagement with the platen, and a single manually operable element for controlling the line spacing means and the frame swinging means in sequence.

18. In a manifolding device, a platen over which work sheets are fed, a rearwardly inclined supporting frame pivotally supported at its lower end adjacent the platen and over which the forward end portion of the work sheets travels after leaving the platen, a clamp for the forward end portion of the sheets movably supported on the frame, means for imparting line spacing movements to the clamp, a guide for the work sheets located below the platen, and means for

swinging said supporting frame to a substantially vertical position preliminary to the line spacing movement to relieve the work sheets from frictional engagement with the platen.

19. In a manifolding device, a platen over which work sheets are fed, a rearwardly inclined supporting frame pivotally supported at its lower end adjacent the platen and over which the forward end portion of the work sheets travels after leaving the platen, means for line spacing said forward end portion of the work sheets, a guide for the work sheets located below the platen, means for swinging said supporting frame to a substantially vertical position preliminary to the line spacing movement to relieve the work sheets from frictional engagement with the platen, printing instrumentalities, and means for returning the frame to its inclined position previous to the printing operation.

20. In a manifolding device, an inclined frame over which travels a plurality of work sheets after they pass the printing line, upper shafts and a lower shaft near the lower end of the frame, arms on the lower shaft to which the frame is pivotally connected, said frame having rearward extensions at its lower end and formed with arcuate slots for sliding connection with the upper shafts, a platen carried by said frame and over which the work sheets pass, and means for swinging said frame to a vertical position whereby the lower end thereof will be moved rearwardly by said slot and shaft connections.

21. In a manifolding device for typewriters and similar machines, a travelling carriage, a fixed rail carried by the frame of the machine, a rail on the carriage, a work sheet supporting frame comprising two main elements, one of which includes a pair of pivotally connected arms and a roller mounted on one of the arms for cooperation with the fixed rail, and the other of which elements has means engaging the rail on the carriage, and spring means connecting the arms of the first mentioned element for holding both of said elements in engaging operative positions with the respective rails.

22. In a manifolding device, a platen past which work sheets are fed, a line spacing mechanism for the work sheets, and means for relatively moving the work sheets and platen through a fixed degree of movement for separating the work sheets and platen and for operating the line spacing mechanism subsequent to the completion of said relative movement and while the work sheets and platen are separated.

23. In a manifolding device, a platen past which work sheets are fed, a line spacing mechanism for the work sheets, and means including a single manually operable lever for relatively moving the work sheets and platen through a fixed degree of movement for separating the work sheets and platen and for operating the line spacing mechanism subsequent to the completion of said relative movement and while the work sheets and platen are separated.

24. In a manifolding device, a platen past which work sheets are fed, a line spacing mechanism for the work sheets, and means for moving the platen away from the work sheets a predetermined fixed distance and for operating the line spacing mechanism subsequent to the completion of said platen movement and while the work sheets and platen are separated.

25. In a manifolding device, a platen past which work sheets are fed, a line spacing mechanism for the work sheets, and means including a single manually operable lever for moving the platen away from the work sheets a predetermined fixed distance and for operating the line spacing mechanism subsequent to the completion of said platen movement and while the work sheets and platen are separated.

26. In a manifolding device, a platen past which work sheets are fed, a frame over which the work sheets travel after leaving the platen and fixed to the platen, line spacing mechanism for the work sheets mounted on the frame, and means for moving the frame and platen to separate the platen from the work sheets and for operating the line spacing mechanism while the work sheets and platen are separated.

27. In a manifolding device, a platen past which work sheets are fed, a frame over which the work sheets travel after leaving the platen and fixed to the platen, line spacing mechanism for the work sheets mounted on the frame, and means including a single manually operable lever for moving the frame and platen to separate the platen from the work sheets and for operating the line spacing mechanism while the work sheets and platen are separated.

28. In a manifolding device, a platen past which work sheets are fed and which sheets tightly and compactly engage said platen prior to and during printing intervals, a line spacing mechanism for the work sheets, and means for relieving said tight and compact engagement between work sheets and platen and for operating the line spacing mechanism while such engagement is relieved.

29. In a manifolding device, a platen past which work sheets are fed and which work sheets tightly and compactly engage said platen prior to and during printing intervals, a line spacing mechanism for the work sheets, and means including a single manually operable level for relieving said tight and compact engagement between work sheets and platen and for operating the line spacing mechanism while such engagement is relieved.

30. In a manifolding device, a platen past which work sheets are fed, a frame over which the work sheets travel after leaving the platen and fixed to the platen, line spacing mechanism for the work sheets mounted on the frame, and means for moving the frame and platen between printing and non-printing positions in which the platen tightly engages and compacts the work sheets and in which said platen is relieved from such engagement respectively, and for operating the line spacing mechanism while said platen is relieved from such engagement.

31. In a manifolding device, a platen past which work sheets are fed, a frame over which the work sheets travel after leaving the platen and fixed to the platen, line spacing mechanism for the work sheets mounted on the frame, and means including a single manually operable lever for moving the frame and platen between printing and non-printing positions in which the platen tightly engages and compacts the work sheets and in which said platen is relieved from such engagement respectively, and for operating the line spacing mechanism while said platen is relieved from such engagement.

32. In a manifolding device, a platen past which work sheets are fed and which sheets tightly and compactly engage said platen at printing intervals, striking type cooperating with the platen to print on said work sheets during said printing intervals, a line spacing mechanism for the work sheets, and means for first relieving said tight and compact engagement between the work sheets and platen and for subsequently operating the line spacing mechanism while such engagement is relieved.

33. In a manifolding device, a platen past which work sheets are fed and which sheets tightly and compactly engage said platen at printing intervals, striking type cooperating with the platen to print on said work sheets during said printing intervals, a line spacing mechanism for the work sheets, and means including a single manually operable lever for first relieving said tight and compact engagement between the work sheets and platen and for subsequently operating the line spacing mechanism while such engagement is relieved.

34. In a manifolding device, a platen past which work sheets are fed and which sheets tightly and compactly engage said platen at printing intervals, striking type cooperating with the platen to print on said work sheets during said printing intervals, a frame over which the work sheets travel after leaving the platen and fixed to the platen, line spacing mechanism for the work sheets mounted on the frame, and means for moving the frame and platen between printing and non-printing positions in which the platen tightly engages and compacts the work sheets and in which said platen is relieved from such engagement respectively, and for operating the line spacing mechanism while said platen is relieved from such engagement.

35. In a manifolding device, a platen past which work sheets are fed and which sheets tightly and compactly engage said platen at printing intervals, striking type cooperating with the platen to print on said work sheets during said printing intervals, a frame over which the work sheets travel after leaving the platen and fixed to the platen, line spacing mechanism for the work sheets mounted on the frame, and means including a single manually operable lever for moving the frame and platen between printing and non-printing positions in which the platen tightly engages and compacts the work sheets and in which said platen is relieved from such engagement respectively, and for operating the line spacing mechanism while said platen is relieved from such engagement,

36. In a manifolding device, the combination with a platen having a transversely curved printing surface, of means for guiding work sheets from below the platen to above the platen and in a substantially flat vertical condition in front of the platen, and means for effecting relative movement between the work sheets and platen whereby the work sheets will be curved to conform to and tightly contact the printing surface of the platen.

37. In a manifolding device, the combination with a carriage having a platen provided with a transversely curved printing surface, of means respectively disposed below and above the platen for positioning work sheets in a substantially flat vertical condition in front of the platen, and means for bodily moving the platen to engage the work sheets between the respective positioning means and curve said sheets to conform to and tightly contact the printing surface of the platen.

38. In a manifolding device, the combination with a platen having a transversely curved printing surface, of means for guiding work sheets from one side of the platen to the other and in a substantially flat condition, means for effecting relative movement between the work sheets and platen whereby the work sheets will be curved to conform to and tightly contact the printing surface of the platen, and means for effecting a line spacing movement to the work sheets while the latter are in substantially flat condition.

39. In a manifolding device, the combination with a platen element provided with a transversely curved printing surface, a guide element for work sheets disposed below the platen, a holder element for the leading ends

of the work sheets disposed above the platen and cooperating with the guide element for positioning the work sheets in a substantially flat vertical condition in front of the platen, and means for moving one of said elements relative to the other two elements for relatively moving the platen and work sheets into tight and curved contact with each other.

40. In a manifolding device, the combination with a platen element provided with a transversely curved printing surface, of a guide element for work sheets disposed at one side of the platen, a holder element for the leading ends of the work sheets disposed at the other side of the platen and cooperating with the guide element for positioning the work sheets in a substantially flat condition, means for moving one of said elements relative to the other two elements for relatively moving the platen and work sheets into tight and curved contact with each other, and means for moving the holder element for effecting a line spacing movement to the work sheets while the latter are in their substantially flat condition.

41. In a manifolding front strike typewriter, the combination with a platen having a transversely curved printing surface, of means for guiding work sheets upwardly from a point below the platen to a point above the platen and in a substantially flat condition in front of said platen, and means for effecting relative movement between the work sheets and platen and guiding means whereby the work sheets will be curved to conform to and tightly contact the printing surface of the platen.

42. In a manifolding front strike typewriter, the combination with a carriage having a platen provided with a transversely curved printing surface, of type bars disposed in front of the platen for cooperation therewith, means respectively disposed above and below the platen for positioning work sheets in a substantially flat vertical condition between the platen and the type bars, and means for bodily moving the platen forwardly to engage the work sheets between the respective positioning means and curve said sheets to conform to and tightly contact the printing surface of the platen.

43. In a manifolding front strike typewriter, the combination with a platen having a transversely curved printing surface, of upper and lower means for guiding work sheets upwardly from a point below the platen to a point above the platen and in substantially flat condition in front of said platen, means for effecting relative movement between the work sheets and platen whereby the work sheets will be curved to conform to and tightly contact the printing surface of the platen, and means for moving the upper guide means for effecting a line spacing movement to the work sheets prior to the completed relative movement between the platen and the work sheets.

44. In a manifolding front strike typewriter, the combination with a platen element provided with a transversely curved printing surface, of type bars disposed in front of the platen element for cooperation therewith, a guide element for work sheets disposed below the platen, a holder element for the leading ends of the work sheets disposed above the platen and cooperating with the guide element for positioning the work sheets in a substantially flat vertical condition between the platen and the type bars, and means for moving one of said elements relative to the other two elements for relatively moving the platen and work sheets into tight and curved contact with each other.

45. In a manifolding front strike typewriter, the combination with a carriage having a platen element provided with a transversely curved printing surface, of type bars disposed in front of the platen element for cooperation therewith, a guide element for the work sheets disposed below the platen, a holder element for the leading ends of the work sheets disposed above the platen and cooperating with the guide element for positioning the work sheets in a substantially flat vertical condition between the platen and the type bar, means for moving one of said elements relative to the other two elements for relatively moving the platen and work sheets into tight and curved contact with each other, and means for moving the holder element for effecting a line spacing movement to the work sheets while the latter are in their substantially flat vertical condition.

46. In a manifolding device, a curved-faced platen past which work sheets are fed and which sheets conform to the curvature of the platen at the printing line during printing intervals, means to effect relative movement between the platen and work sheets to cause the curved portion of the work sheets at printing intervals to become a plane surface at other intervals, and means to line space the work sheets while they present a plane surface at the printing line.

47. In a manifolding device, the combination with a typewriting machine having type arms and a platen arranged in cooperative relation, of a guide disposed below the platen, a holder disposed above the platen and movable to feed vertically disposed work sheets past the guide and platen and between the platen and the type arms, and means for effecting a relative bodily movement between the platen and the guide for placing the work sheets and the printing line of the platen in tight contact with each other preparatory to certain printing operations by the type arms and for relieving said tight contact relation between the work sheets and the platen prior

to the work sheets' feeding operation by the holder.

48. In a manifolding device, the combination with a typewriting machine having type arms and a platen arranged in cooperative relation, of a guide disposed below the platen, a holder disposed above the platen and movable to feed vertically disposed work sheets past the guide and platen and between the platen and the type arms, and means including a single manually operable lever for effecting a relative bodily movement between the platen and the guide for placing the work sheets and the printing line of the platen in tight contact with each other preparatory to certain printing operations by the type arms and for relieving said tight contact relation between the work sheets and the platen prior to the work sheets' feeding operation by the holder.

49. In a manifolding device, the combination with a typewriting machine having type arms and a platen arranged in cooperative relation, of a guide disposed at one side of the platen, a holder disposed at the other side of the platen and movable to feed work sheets past the guide and platen and between the platen and the type arms, and means for moving the platen bodily forward into tight contact with the work sheets preparatory to certain printing operations by the type arms and then rearwardly relative to the work sheets to relieve said tight contact relation and for moving said holder to effect a line spacing operation of the work sheets when the platen is in its rearwardly moved position.

50. In a manifolding device, the combination with a typewriting machine having type arms and a platen arranged in cooperative relation, of a guide disposed at one side of the platen, a holder disposed at the other side of the platen and movable to feed work sheets past the guide and platen and between the platen and the type arms, and means including a single manually operable lever for moving the platen bodily forward into tight contact with the work sheets preparatory to certain printing operations by the type arms and then rearwardly relative to the work sheets to relieve said tight contact relation and for moving said holder to effect a line spacing operation of the work sheets when the platen is in its rearwardly moved position.

51. In a manifolding device, the combination with a typewriting machine having type arms and a platen arranged in cooperative relation, of a guide disposed at one side of the platen, a frame over which the work sheets travel after leaving the platen, said platen being fixed to the frame and the frame being located on the side of the platen opposite the guide, line spacing mechanism for the work sheets mounted on the frame for feeding the work sheets past the guide and platen and between the platen and the type arms, and means for bodily moving the platen between printing and non-printing positions in which the platen tightly engages and compacts the work sheets and in which said platen is relieved from such engagement respectively, and for operating the line spacing mechanism while said platen is relieved from such engagement.

52. In a manifolding device, the combination with a typewriting machine having type arms and a platen arranged in cooperative relation, of a guide disposed at one side of the platen, a frame over which the work sheets travel after leaving the platen, said platen being fixed to the frame and the frame being located on the side of the platen opposite the guide, line spacing mechanism for the work sheets mounted on the frame for feeding the work sheets past the guide and platen and between the platen and the type arms, and means including a single manually operable lever for bodily moving the platen between printing and non-printing positions in which the platen tightly engages and compacts the work sheets and in which said platen is relieved from such engagement respectively, and for operating the line spacing mechanism while said platen is relieved from such engagement.

53. In a manifolding device, the combination with a typewriting machine having type arms and a platen arranged in cooperative relation, of a guide disposed at one side of the platen, a pivoted frame over which the work sheets travel after leaving the platen, said platen being fixed to the frame and the frame being located on the side of the platen opposite the guide, line spacing mechanism for the work sheets mounted on the frame for feeding the work sheets past the guide and platen and between the platen and the type arms, and means for swinging the frame and platen between printing and non-printing positions in which the platen tightly engages and compacts the work sheets and in which said platen is relieved from such engagement respectively, and for operating the line spacing mechanism while said platen is relieved from such engagement.

54. In a manifolding device, the combination with a typewriting machine having type arms and a platen arranged in cooperative relation, of a stationary guide disposed below the platen, a holder disposed above the platen and movable to feed vertically disposed work sheets past the guide and platen and between the platen and the type arms, and means for effecting a relative movement between the platen and the holder for placing the work sheets and the printing line of the platen in tight contact with each other preparatory to certain printing operations by the type arms and for relieving said tight contact relation between the work sheets and

the platen prior to the work sheets' feeding operation by the holder.

55. In a manifolding device, the combination with a typewriting machine having type arms and a platen arranged in cooperative relation, of a stationary guide disposed below the platen, a holder disposed above the platen and movable to feed vertically disposed work sheets past the guide and platen and between the platen and the type arms, and means including a single manually operable lever for effecting a relative movement between the platen and the holder for placing the work sheets and the printing line of the platen in tight contact with each other preparatory to certain printing operations by the type arms and for relieving said tight contact relation between the work sheets and the platen prior to the work sheets' feeding operation by the holder.

56. In a manifolding device, the combination with a typewriting machine having type arms and a platen arranged in cooperative relation, of a guide disposed below the platen and fixed against bodily movement relative thereto, a holder disposed above the platen and movable to feed vertically disposed work sheets past the guide and platen and between the platen and the type arms, and means for effecting bodily movements of the holder and platen in opposite direction simultaneously for placing the work sheets and the printing line of the platen in tight contact with each other preparatory to certain printing operations by the type arms and for relieving said tight contact relation between the work sheets and the platen prior to the work sheets' feeding operation by the holder.

57. In a manifolding device, the combination with a typewriting machine having type arms and a platen arranged in cooperative relation, of a guide disposed below the platen and fixed against bodily movement relative thereto, a holder disposed above the platen and movable to feed vertically disposed work sheets past the guide and platen and between the platen and the type arms, and means including a single manually operable lever for effecting bodily movements of the holder and platen in opposite direction simultaneously for placing the work sheets and the printing line of the platen in tight contact with each other preparatory to certain printing operations by the type arms and for relieving said tight contact relation between the work sheets and the platen prior to the work sheets' feeding operation by the holder.

58. In a manifolding device, a platen over which work sheets are fed, a clamp for the leading ends of said work sheets, a pivoted frame over which said clamp moves for line spacing said work sheets, said frame being normally inclined rearwardly to maintain the work sheets in tight contact with the platen, and means for swinging the frame forwardly from said rearwardly inclined position to a substantially vertical position whereby said work sheets will be relieved of said tight contact relation with the platen and for effecting line spacing movement to the clamp while the frame is in said substantially vertical position.

59. In a manifolding device, a platen over which work sheets are fed, a clamp for the leading ends of said work sheets, a pivoted frame over which said clamp moves for line spacing said work sheets, said frame being normally inclined rearwardly to maintain the work sheets in tight contact with the platen, and means including a single manually operable lever for swinging the frame forwardly from said rearwardly inclined position to a substantially vertical position whereby said work sheets will be relieved of said tight contact relation with the platen and for effecting line spacing movement to the clamp while the frame is in said substantially vertical position.

60. In a manifolding device, a platen over which work sheets are fed, a clamp for the leading ends of said work sheets, a pivoted frame over which said clamp moves for line spacing said work sheets, said frame being normally inclined rearwardly to maintain the work sheets in tight contact with the platen, means for swinging the frame forwardly from said rearwardly inclined position to a substantially vertical position whereby said work sheets will be relieved of said tight contact relation with the platen and for effecting line spacing movement to the clamp while the frame is in said substantially vertical position, and means for releasing said clamp from said line-space effecting means.

61. In a manifolding device, a platen over which work sheets are fed, a clamp for the leading ends of said work sheets, a pivoted frame over which said clamp moves for line spacing said work sheets, said frame being normally inclined rearwardly to maintain the work sheets in tight contact with the platen, means for swinging the frame forwardly from said rearwardly inclined position to a substantially vertical position whereby said work sheets will be relieved of said tight contact relation with the platen and for effecting line spacing movement to the clamp while the frame is in said substantially vertical position, and means for releasing said clamp from said sheets.

62. In a manifolding device, a platen over which work sheets are fed, a clamp for the leading ends of said work sheets, a pivoted frame over which said clamp moves for line spacing said work sheets, said frame being normally inclined rearwardly to maintain the work sheets in tight contact with the platen, means for swinging the frame forwardly from said rearwardly inclined position to a substantially vertical position whereby said

work sheets will be relieved of said tight contact relation with the platen and for effecting line spacing movement to the clamp while the frame is in said substantially vertical position, and means for simultaneously releasing said clamp from said line space effecting means and from said sheets.

63. In a manifolding device, a platen past which work sheets are fed, a clamp for the leading ends of the work sheets, a frame pivotally mounted at its lower end and over which frame said clamp moves for line spacing said work sheets, said frame being normally inclined rearwardly to maintain the work sheets in tight contact with the platen, links pivotally connected to the upper end of the frame, means connected with the links for swinging the frame forwardly from said rearwardly inclined position to a substantially vertical position whereby said work sheets will be relieved of said tight contact relation with said platen, and means for moving said clamp to effect line spacing of the work sheets while said frame is in the substantially vertical position.

64. In a manifolding device, a platen past which work sheets are fed, a clamp for the leading ends of the work sheets, a frame pivotally mounted at its lower end and over which frame said clamp moves for line spacing said work sheets, said frame being normally inclined rearwardly to maintain the work sheets in tight contact with the platen, links pivotally connected to the upper end of the frame, means including a single manually operable lever connected with the links for swinging the frame forwardly from said rearwardly inclined position to a substantially vertical position whereby said work sheets will be relieved of said tight contact relation with said platen, and means connected to said lever for moving said clamp to effect line spacing of the work sheets while said frame is in the substantially vertical position.

65. In a manifolding device, a platen past which work sheets are fed, a frame over which the work sheets travel, said platen being secured to said frame intermediate its ends and adjacent one end, line spacing mechanism for the work sheets mounted on the frame, means for reversely moving the respective ends of the frame to cause said platen to be moved against the work sheets for the purpose of tightly compacting them during printing intervals or in the opposite direction to relieve said work sheets' compacted condition, and means to actuate said line spacing mechanism while said work sheets' compact condition is relieved.

66. In a manifolding device, a platen past which work sheets are fed, a frame over which the work sheets travel, said platen being secured to said frame intermediate its ends and adjacent one end, line spacing mechanism for the work sheets mounted on the frame, means to move the platen carrying end of the frame in one direction and the other end of said frame in the opposite direction to cause said platen to engage and tightly compact the work sheets or for reversely moving the respective frame ends to position the platen for relieving said work sheets' compacting condition, and means to actuate the line spacing mechanism while the work sheets' compacted condition is relieved.

67. In a manifolding device, a platen past which work sheets are fed, a clamp for the leading ends of the work sheets, a frame on which said platen is mounted and over which said clamp moves for line spacing said work sheets, said frame being normally inclined rearwardly to maintain the work sheets in compacting contact with the platen, means including links connected to the upper and lower ends of the frame for moving the upper end of the frame forwardly and the lower end of the frame rearwardly to position the frame substantially vertical and the platen in position for relieving the work sheets, compacted condition, and means to move the clamp to line space the work sheets while said frame is in the substantially vertical position.

68. In a manifolding device, a platen past which work sheets are fed, a clamp for the leading ends of the work sheets, a frame on which said platen is mounted and over which said clamp moves for line spacing said work sheets, said frame being normally inclined rearwardly to maintain the work sheets in compacting contact with the platen, means including links connected to the upper and lower ends of the frame for moving the upper end of the frame forwardly and the lower end of the frame rearwardly to position the frame substantially vertical and the platen in position for relieving the work sheets' compacted condition, said frame being movable through a greater distance at its upper end than at its lower end, and means to move the clamp to line space the work sheets while said frame is in the substantially vertical position.

69. In a manifolding device, a carriage mounted for letter space movement, a platen past which work sheets are fed, a line spacing mechanism for the work sheets, and means for relatively moving the work sheets and platen through a fixed degree of movement for separating the work sheets and platen and for operating the line spacing mechanism subsequent to the completion of said relative movement and while the work sheets and platen are separated, said platen, said line spacing mechanism and said moving and operating means being mounted on said carriage for movement therewith.

70. In a manifolding device, a carriage mounted for letter space movement, a platen past which work sheets are fed, a line spac-

ing mechanism for the work sheets, and means including a single manually operable lever for relatively moving the work sheets and platen through a fixed degree of movement for separating the work sheets and platen and for operating the line spacing mechanism subsequent to the completion of said relative movement and while the work sheets and platen are separated, said platen, said line spacing mechanism and said moving and operating means being mounted on said carriage for movement therewith.

71. In a manifolding device, a carriage mounted for letter space movement, a platen past which work sheets are fed, a frame over which the work sheets travel after leaving the platen and fixed to the platen, line spacing mechanism for the work sheets mounted on the frame, and means for moving the frame and platen to separate the platen from the work sheets and for operating the line spacing mechanism while the work sheets and platen are separated, said platen, said frame, said line spacing mechanism and said moving and operating means being mounted on said carriage for movement therewith.

72. In a manifolding device, a carriage mounted for letter space movement, a platen past which work sheets are fed, a frame over which the work sheets travel after leaving the platen and fixed to the platen, line spacing mechanism for the work sheets mounted on the frame, and means including a single manually operable lever for moving the frame and platen to separate the platen from the work sheets and for operating the line spacing mechanism while the work sheets and platen are separated, said platen, said frame, said line spacing mechanism and said moving and operating means being mounted on said carriage for movement therewith.

73. In a manifolding device, a carriage mounted for letter space movement, a platen past which work sheets are fed and which sheets tightly and compactly engage said platen prior to and during printing intervals, a line spacing mechanism for the work sheets, and means for relieving said tight and compact engagement between work sheets and platen and for operating the line spacing mechanism while such engagement is relieved, said platen, said work sheets and said relieving and operating means all being supported upon said carriage and movable therewith.

74. In a manifolding device, a carriage mounted for letter space movement, a platen past which work sheets are fed and which sheets tightly and compactly engage said platen prior to and during printing intervals, a line spacing mechanism for the work sheets, and means including a single manually operable lever for relieving said tight and compact engagement between work sheets and platen and for operating the line spacing mechanism while such engagement is relieved, said platen, said work sheets and said relieving and operating means all being supported upon said carriage and movable therewith.

75. In a manifolding device, a carriage mounted for letter space movement, a platen past which work sheets are fed, a frame over which the work sheets travel after leaving the platen and fixed to the platen, line spacing mechanism for the work sheets mounted on the frame, and means for moving the frame and platen between printing and non-printing positions in which the platen tightly engages and compacts the work sheets and in which said platen is relieved from such engagement respectively, and for operating the line spacing mechanism while said platen is relieved from each engagement, said platen, said frame, said line spacing mechanism and moving and operating means being supported by said carriage and movable therewith.

76. In a manifolding device, a carriage mounted for letter space movement, a platen past which work sheets are fed, a frame over which the work sheets travel after leaving the platen and fixed to the platen, line spacing mechanism for the work sheets mounted on the frame, and means including a single manually operable lever for moving the frame and platen between printing and non-printing positions in which the platen tightly engages and compacts the work sheets and in which said platen is relieved from such engagement respectively, and for operating the line spacing mechanism while said platen is relieved from such engagement, said platen, said frame, said line spacing mechanism and moving and operating means being supported by said carriage and movable therewith.

77. In a manifolding device, a carriage mounted for letter space movement, a platen past which work sheets are fed and which sheets tightly and compactly engage said platen at printing intervals, striking type cooperating with the platen to print on said work sheets during said printing intervals, a line spacing mechanism for the work sheets, and means for first relieving said tight and compact engagement between the work sheets and platen and for subsequently operating the line spacing mechanism while such engagement is relieved, said platen, said work sheets, said line spacing mechanism and said moving and operating means being supported on and movable with said carriage.

78. In a manifolding device, a carriage mounted for letter space movement, a platen past which work sheets are fed and which sheets tightly and compactly engage said platen at printing intervals, striking type cooperating with the platen to print on said work sheets during said printing intervals,

a line spacing mechanism for the work sheets, and means including a single manually operable lever for first relieving said tight and compact engagement between the work sheets and platen and for subsequently operating the line spacing mechanism while such engagement is relieved, said platen, said work sheets, said line spacing mechanism and said moving and operating means being supported on and movable with said carriage.

79. In a manifolding device, the combination with a carriage mounted for letter space movement, of a platen having a transversely curved printing surface, means for guiding work sheets from below the platen to above the platen and in a substantially vertical flat condition, and means for effecting relative movement between the work sheets and platen whereby the work sheets will be curved to conform to and tightly contact the printing surface of the platen, said platen, said guiding means and said relative movement effecting means being mounted on said carriage and movable therewith.

80. In a manifolding device, the combination with a carriage mounted for letter space movement, of a platen element provided with a transversely curved printing surface, a guide element for work sheets disposed at one side of the platen, a holder element for the leading ends of the work sheets disposed at the other side of the platen and cooperating with the guide element for positioning the work sheets in a substantially flat condition, means for moving one of said elements relative to the other two elements for relatively moving the platen and work sheets into tight and curved contact with each other, and means for moving the holder element for effecting a line spacing movement to the work sheets while the latter are in their substantially flat condition, said platen element, said guide element, said holder element, said relative movement effecting means and said holder element movement effecting means being mounted on said carriage and movable therewith.

81. In a manifolding device, the combination with a typewriting machine having type arms and a platen arranged in cooperative relation, of a guide disposed at one side of the platen, a holder disposed at the other side of the platen and movable to feed work sheets past the guide and platen and between the platen and the type arms, means including a single manually operable lever for moving the platen bodily forward into tight contact with the work sheets preparatory to certain printing operations by the type arms and then rearwardly relative to the work sheets to relieve said tight contact relation and for moving said holder to effect a line spacing operation of the work sheets when the platen is in its rearwardly moved position, and a carriage movable for letter space movement, said platen, said guide, said holder and said platen and holder movement effecting means being mounted on said carriage and movable therewith.

82. In a manifolding device, a non-rotatable platen over which work sheets are fed, a frame over which the work sheets travel after leaving the platen and fixed to the platen, line spacing mechanism for the work sheets mounted on the frame, and means for moving the frame and platen to separate the platen from the work sheets and for operating the line spacing mechanism while the work sheets and platen are separated.

83. In a manifolding device, a non-rotatable platen over which work sheets are fed, a frame over which the work sheets travel after leaving the platen and fixed to the platen, line spacing mechanism for the work sheets mounted on the frame, and means including a single manually operable lever for moving the frame and platen to separate the platen from the work sheets and for operating the line spacing mechanism while the work sheets and platen are separated.

In testimony whereof, I have hereunto subscribed my name.

GUSTAVE O. DEGENER.