July 20, 1943. L. L. SALFISBERG 2,325,021

PACKAGE WITH FOLD-CLOSED DELIVERY NECK

Filed May 27, 1942 4 Sheets-Sheet 1

Fig. 1

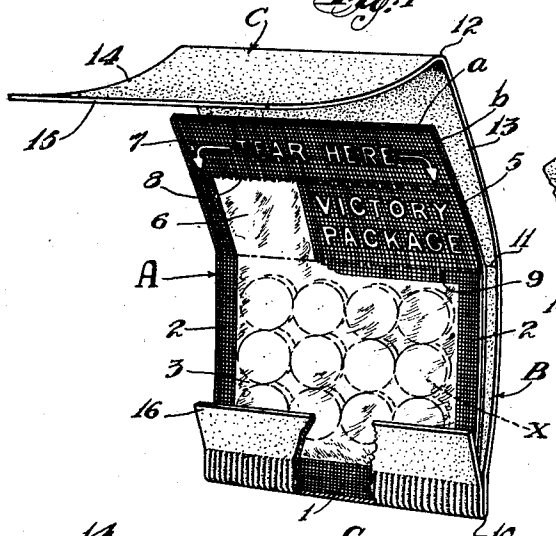

Fig. 3

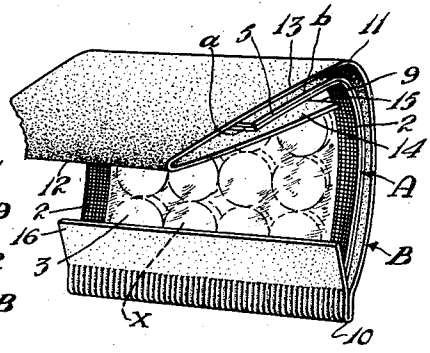

Fig. 4

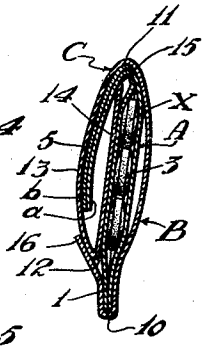

Fig. 2

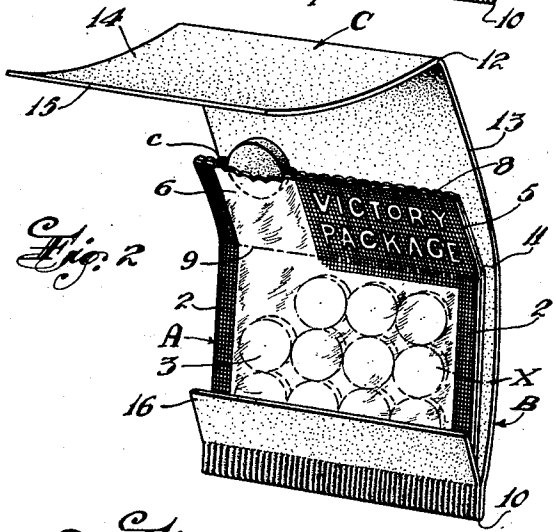

Fig. 5

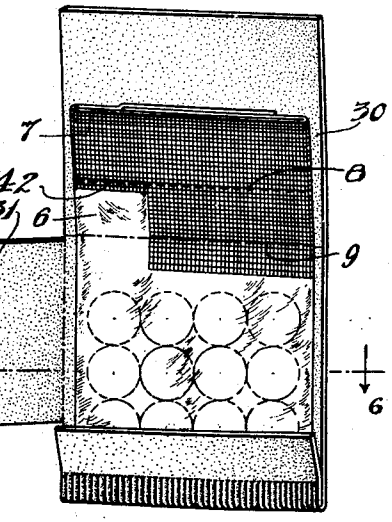

Fig. 7



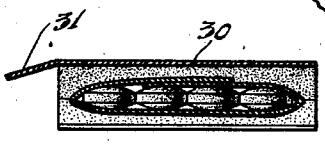

Fig. 6

Leroy L. Salfisberg, INVENTOR
BY
Harry B. Scott.
ATTORNEY

July 20, 1943. L. L. SALFISBERG 2,325,021

PACKAGE WITH FOLD-CLOSED DELIVERY NECK

Filed May 27, 1942 4 Sheets-Sheet 2

Fig. 8

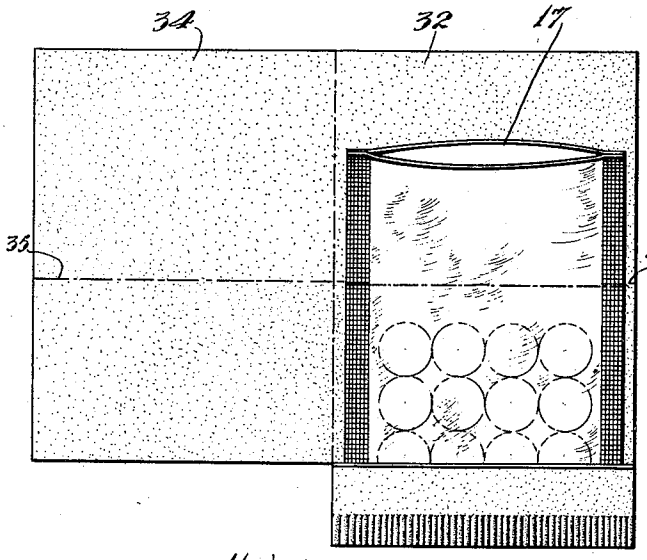

Fig. 9

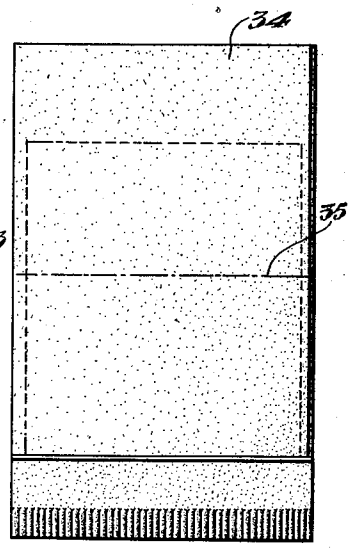

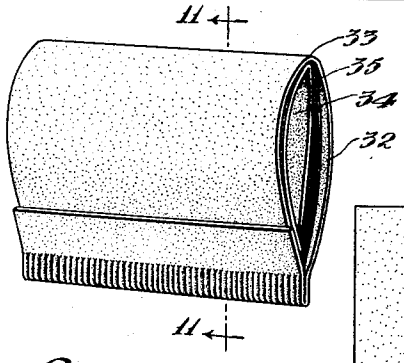

Fig. 10

Fig. 12

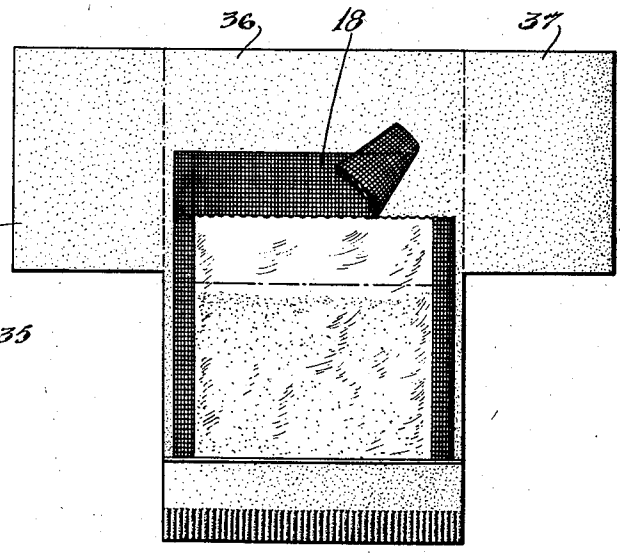

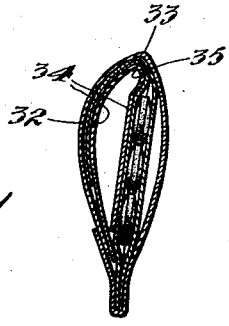

Fig. 11

INVENTOR
Leroy L. Salfisberg,
BY
Harry B. Koch,
ATTORNEY

July 20, 1943. L. L. SALFISBERG 2,325,021

PACKAGE WITH FOLD-CLOSED DELIVERY NECK

Filed May 27, 1942 4 Sheets-Sheet 3

Fig. 13

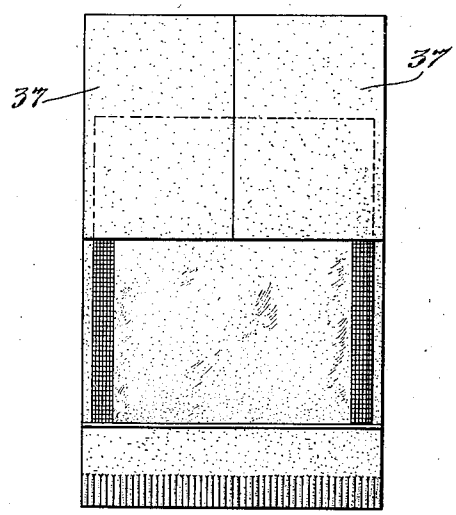

Fig. 14

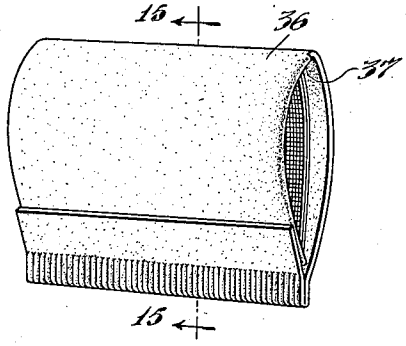

Fig. 15

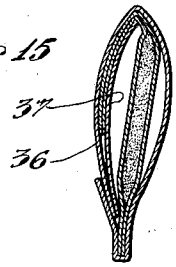

Fig. 16

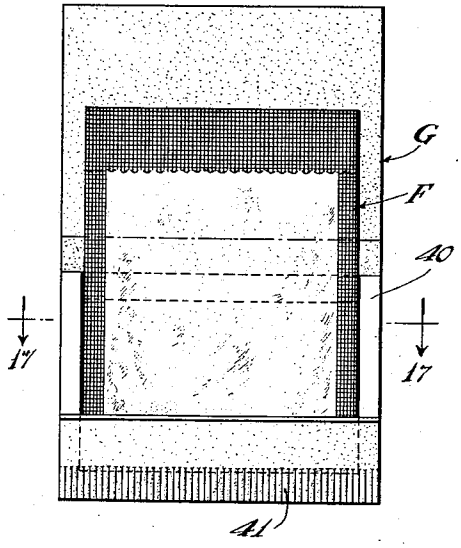

Fig. 17

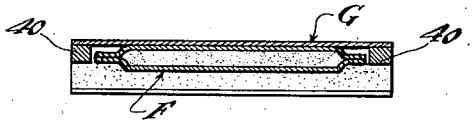

Fig. 18

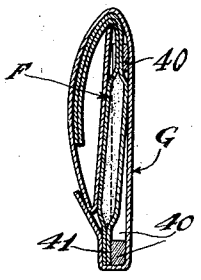

Leroy L. Salfisberg, INVENTOR
BY
Harry A. Rook, ATTORNEY

July 20, 1943. L. L. SALFISBERG 2,325,021

PACKAGE WITH FOLD-CLOSED DELIVERY NECK

Filed May 27, 1942 4 Sheets-Sheet 4

Fig. 19

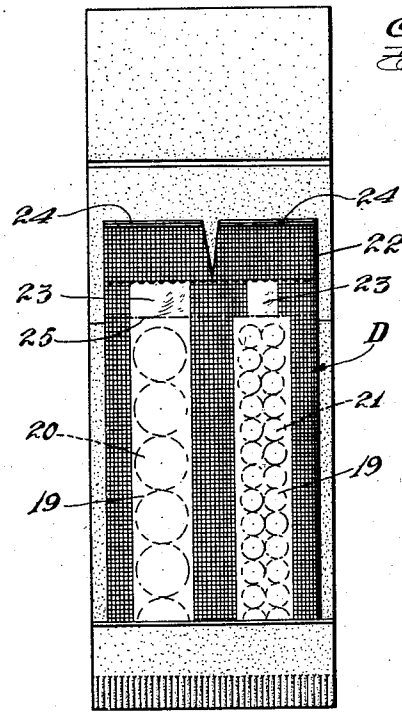

Fig. 20

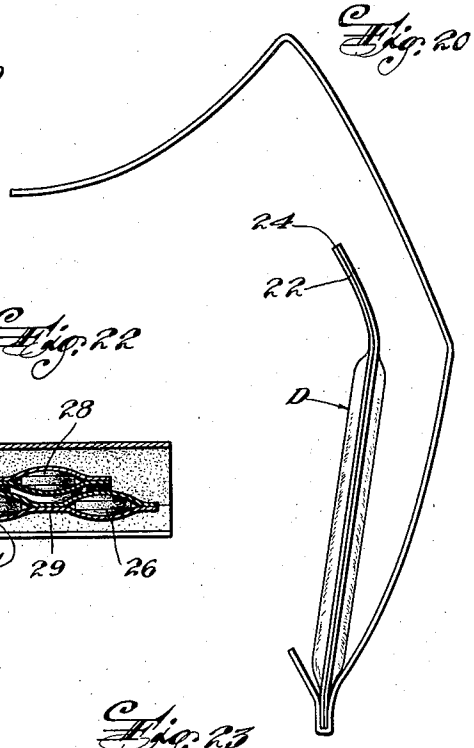

Fig. 22

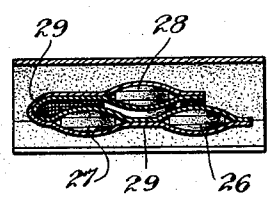

Fig. 21

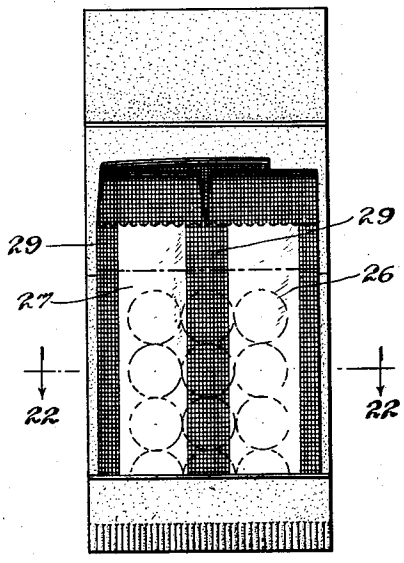

Fig. 23

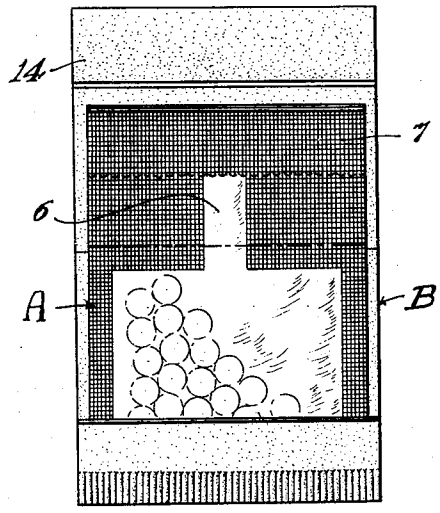

INVENTOR
Leroy L. Salfisberg,
BY
Harry B. Rock,
ATTORNEY

Patented July 20, 1943 2,325,021

UNITED STATES PATENT OFFICE

2,325,021

PACKAGE WITH A FOLD-CLOSED DELIVERY NECK

Leroy L. Salfisberg, South Orange, N. J., assignor to Ivers-Lee Company, Newark, N. J., a corporation of Delaware

Application May 27, 1942, Serial No. 444,670

11 Claims. (Cl. 206—56)

This invention relates to the package described and claimed in my copending application Serial No. 358,377, filed September 26, 1940, and comprises in general a package for small articles such as tablets, pills, or buttons or powdered or granulated material, or liquid or paste.

In general the package comprises a bag initially sealed across one end and having a tearing flap for removal of the sealed portions to open the bag. The bag also has a fold extending entirely across it inwardly of said sealed end so that after initial opening of the bag, when the bag is folded it is closed, while when it is unfolded it is open. A cover is connected to the bag and comprises a strip which is folded around and secured to the end of the bag opposite the seal and also has a fold to receive said fold of the bag. The cover has a closure flap which includes a portion to separably enter said fold of the bag as the cover is folded around the bag so as to hold the bag fold snugly in said fold of the cover. Thereby the bag is held closed and is stretched and maintained flat between said fold and the point of connection of the bag with the cover so that the bag cannot move or become crumpled in the cover during handling of the package. When the cover is unfolded, said portion of the closure flap is removed from the bag fold and the latter may be unfolded to open the bag.

A person unfamiliar with the structure and operation of the package might tear the bag along the fold to open it, or the bag might accidentally become torn or worn along the fold so as to open the whole end of the bag and make it practically impossible thereafter to hold the bag within the cover in such a manner as to completely close the bag.

One object of the present invention is to provide a package of this general character wherein the bag shall embody novel and improved features of construction to prevent complete opening of one end of the bag should the bag be torn along the fold by mistake or accident.

With the bag of my copending application, it is also possible, through mistake, to fold the cover around the bag without the cover flaps in proper cooperative relation to the bag fold, and therefore another object of my invention is to provide a novel and improved cover which will ensure that as the cover is closed around the bag the proper portion of cover shall be brought into the desired cooperative relation to the bag fold, maintain the bag closed and to hold the bag against movement and in flat proper position in the cover.

Other objects, advantages and results of the invention will be brought out by the following description in conjunction with the accompanying drawings in which

Figure 1 is a perspective view of a package with a fold-closed delivery neck embodying my invention, showing the package unfolded for opening.

Figure 2 is a similar view showing the package unfolded and open.

Figure 3 is a perspective view of the package, showing the manner of folding it for closing the package.

Figure 4 is a central vertical sectional view through the package showing it completely folded and closed.

Figure 5 is a plan view of a modified form of the package in unfolded condition.

Figure 6 is a horizontal sectional view on the line 6—6 of Figure 5.

Figure 7 is a view similar to Figure 4 showing the package of Figure 5 in folded, closed condition.

Figure 8 is a view similar to Figure 5 showing a further modification of the package.

Figure 9 is a similar view showing the package partially folded.

Figure 10 is a perspective view of the package in folded and closed condition.

Figure 11 is a transverse vertical sectional view on the line 11—11 of Figure 10.

Figure 12 is a plan view of another modification of the package in unfolded condition.

Figure 13 is a similar view showing the package partially folded.

Figure 14 is a perspective view of the package of Figures 12 and 13 in folded and closed condition.

Figure 15 is a transverse vertical sectional view on the line 15—15 of Figure 14.

Figure 16 is a view similar to Figure 12, showing another form of the invention.

Figure 17 is a transverse sectional view on the line 17—17 of Figure 16.

Figure 18 is a view similar to Figure 15 of the package of Figure 16 in folded and closed position.

Figure 19 is a plan view of another type of package embodying the invention shown in unfolded condition.

Figure 20 is a side elevation of the package illustrated in Figure 19.

Figure 21 is a view similar to Figure 19, showing a modification of the package illustrated in Figure 19.

Figure 22 is a horizontal sectional view on the line 22—22 of Figure 21, and

Figure 23 is a view similar to Figure 19 showing another form of the invention.

Specifically describing the form of the invention shown in Figures 1 to 4 inclusive, the package comprises a bag, envelope or like container A formed of suitable material, preferably thin and flexible sheet or strip material such as paper, "Cellophane," "Pliofilm," metallic foil, cloth or the like, especially sheet material which itself is thermoplastic and can be softened by heat or has a thermoplastic or fusible coating, so that the juxtaposed layers of material can be fused or caused to adhere together by application of heat and pressure, or with glue, to form a seal.

As shown, the bag comprises two opposed layers or sheets *a* and *b* of packaging material joined together, as by sealing, under heat and pressure, along one transverse or end margin 1 and longitudinal or side margins 2, to form a compartment or receptacle 3 for articles or a commodity for example tablets *x* to be packaged. The layers *a* and *b* at the other end of the bag are sealed or bonded together in a sealing flange 5 to close the compartment and make it amperproof, certain juxtaposed portions of the layers in said flange being unsealed to form a restricted discharge neck 6 leading outwardly from the compartment for removal of the contents thereof.

Preferably the layers in the sealed zones 1, 2 and 5 are also interdigitated or corrugated, both for greater security and for stiffening the edges of the bag.

The sealing flange 5 has a tearing flap 7 extending across said discharge neck as shown in Figure 1, for producing a discharge opening *c* for the compartment 3 when the flap is torn off as shown in Figure 2. More particularly the free marginal end portion of the sealing flange is scored or weakened along a line 8 which crosses the discharge neck to facilitate removal of the tearing flap.

The bag is folded transversely through the sealing flange and across said discharge neck between the compartment and the tearing flange, as indicated at 9, so that after the bag has been opened by removal of the tearing flap, it is closable by folding the bag along said fold 9.

The bag is especially adaptable to the packaging and dispensing of small articles, such as tablets, or flowing substances, such as powder, the discharge neck facilitating single delivery of the small articles or pouring of a small stream of flowing substance.

It will be observed that the layers *a* and *b* are sealed together inwardly of said fold 9, or in other words, the fold traverses the sealed zone 5 so that should the bag be torn along the fold by mistake or by wear only the relatively small neck 6 will be opened, rather than the whole side of the compartment, and such a small opening can be closed relatively easily.

The bag A is associated with a cover B which is foldable around the bag to enclose and protect it and also to receive printed matter such as advertising media. Preferably the cover is formed of a single strip of material relatively stiffer than the material of which the bag is formed, and is folded at 10 around and secured to the end of the bag opposite the sealing flange as by adhesive or by heat and crimping where the material of which the bag is formed is thermoplastic.

The body portion of the cover strip lies along or is juxtaposed to one side of the bag A, and the cover strip has a second fold 11 to receive the fold 9 of the bag and to form a cover flap C that is hingedly connected at 11 to the body portion of the cover strip. The flap C is folded at 12 to form two hingedly connected sections 13 and 14, the latter of which is adapted to be arranged in side-by-side relation to and beneath the section 13 as the cover is folded about the package. The section 13 is of a size to cover the side of the package opposite the body portion of the cover strip, and the section 14 is of such size that its free end edge 15 may separably enter the fold 9 of the bag so as to stretch and hold flat the bag between said fold and the point of connection 10 of the bag with the cover and at the same time hold the transverse fold 9 of the bag between said end edge 15 and the fold 11 of the cover when the cover is folded around the bag to enclose it, as most clearly shown in Figure 4 of the drawings.

Suitable means may be provided for holding the closure flap C in this cover-closing position, but as shown the marginal end portion 16 of the cover strip beyond the fold 10 is in spaced relation to the side of the bag A so as to releasably receive the fold 12 of the closure flap when the cover is folded around the package, to hold the closure flap against unfolding, as shown in Figures 3 and 4.

With this construction it will be observed that the fold 10 of the cover strip closes and reenforces one end of the bag A, the cover protects the relatively thin and weak material of the bag, the cover flap firmly holds the closure fold 9 of the bag against unfolding, and the section 14 of the closure flap also serves in the nature of a spring follower and stretches and holds the bag in proper position and against crumpling or displacement in the cover. After the bag has been opened initially by removal of the tearing flap 7, the bag can be closed and opened repeatedly by simple folding and unfolding of the cover flap C and the fold 9 of the bag.

The discharge necks may be of different size and located at any desired points in the sealing flange. In Figure 1 the neck is shown as located at one side of the bag and of a size to permit passage of a large tablet therethrough while in Figure 23 the neck is shown at an intermediate point in the width of the flange and of a size to permit single delivery of small pellets.

It may be preferred for some purposes to leave the whole end of the bag initially open and unsealed as indicated at 17 in Figure 8; or the whole sealing flange may constitute the tearing flap as indicated at 18 in Figure 12 so that the size of the discharge opening may be varied by tearing of the flap different distances inwardly from the edge of the bag.

The invention also contemplates a bag having a plurality of compartments for articles or substances to be packaged. As shown in Figures 19 and 20 the bag D has two longitudinally extending compartments 19, which may contain the same or different kinds of articles or substances, e. g., tablets 20 and pellets 21. The bag structure is otherwise in general the same as that shown in Figures 1 to 4, there being a sealing flange 22 having a discharge neck 23 and an individual tearing flap 24 for each compartment. A fold 25 like the fold 9 of Figure 1 and for the same purpose, extends through the flange 22 and across the discharge necks 23, and a cover of the same structure and operating in the same manner as the cover B of Figure 1, cooperates with the bag D.

Figure 21 shows a package having two layers of material sealed together in zones including longitudinal zones 29 to form three compartments 26, 27 and 28, and the layers are longitudinally folded along one of said zones 29 between two adjacent compartments so that one compartment 28 is arranged in opposed relation to and between the other compartments. This provides a compact space-saving arrangement of a plurality of compartments. The structure of this package is otherwise the same as that of Figures 19 and 20.

The invention also contemplates various structures of covers to cooperate with the bag fold for holding the bag closed and in proper relation to the cover. Instead of the cover B shown in Figures 1 to 4 inclusive, I may utilize a cover such as shown in Figure 5, where the closure includes a flap or section 30 like the section 13, and a second flap or section 13 hingedly connected to one longitudinal edge of the cover to fold into overlying relation to the bag beneath the section 8 and with one transverse edge disposed in the bag fold as shown in Figure 7. The section or flap 31 thus performs the same function as the section 14 of Figures 1 to 4, holding the bag closed and against crumpling in the cover.

In Figures 8 to 11 inclusive the cover strip has a closure section or flap 32 like the section 13 hinged by a fold 33 to the body of the cover; and a second flap or wing 34 is hinged to one longitudinal edge of both the body portion and the flap 32. This second flap is foldable inwardly over the bag and also has a fold 35 perpendicular to said longitudinal edge of the cover strip and coincident with the fold 33 to enter the bag fold when the cover is folded around the cover. This provides a stiffer and more secure support of the bag in the cover.

Figures 12 to 15 inclusive show another form of cover wherein the section 36, corresponding to the sections 13, 30 and 32, has a flap or wing 37 hingedly connected to each of its longitudinal edges (Figure 12) to fold inwardly over the bag (Figure 13) beneath the section 36 and each with a transverse edge disposed within the bag fold as shown in Figure 15.

If the package is likely to be subjected to rough handling, means is provided to protect or reenforce the edges of the bag and the cover. In Figures 16 to 18 inclusive I have shown a rectangular reenforcing or protective frame 40 of such size and shape that the bag F may be disposed within and encircled by the frame, the thickness of the frame preferably being approximately equal to the thickness of the bag. One side of the frame is secured within the fold 41 of the cover G in superposed relation to the corresponding end of the bag. The structure and operation of the package otherwise may be the same as hereinbefore described.

When the package is closed the frame 40 will protect the edges of the bag and of the cover against accidental tearing or deformation, and also will to some extent shield the bag against being crushed by pressure or blows on the package from any direction.

In some cases it may be desirable to initially seal the layers of packaging material together to close the bag along a narrow zone 42 inwardly of the scored line 8, as shown in Figure 5, or inwardly of the end of the bag where no tearing flap is used, so that the layers in said narrow zone can be forced apart or separated to open the bag by simply squeezing or pushing the contents of the bag, e. g., a tablet, outwardly between said layers across said zone.

Other modifications in the structure and combination of the bag and cover will occur to those skilled in the art as within the spirit and scope of the invention.

Having thus described my invention, what I claim is:

1. In a package, a bag comprising opposed layers of flexible material joined together and forming a commodity-receiving compartment having a sealing flange at one end thereof and a discharge neck extending into said flange, said flange having a tearing flap extending across said neck for producing a discharge opening for said compartment when said flap is torn, said bag having a transverse fold in said flange between said tearing flap and said compartment to close said discharge opening after removal of the tearing flap, and a cover secured to the bag and foldable therearound, said cover having a closure flap to separably enter said transverse fold and hold the fold against unfolding when the cover is folded around the bag, and means for releasably holding said closure flap in cover-closing position.

2. In a package, a bag comprising opposed layers of flexible material forming between them a commodity-receiving compartment, said layers being sealed together at one end of the bag into a sealing flange for closing said compartment, portions of said layers within said flange being unsealed to form a discharge neck for said compartment and said flange having a tearing flap extending across said neck for producing a discharge opening for said compartment when said flap is torn, said bag having a transverse fold in said flange between said tearing flap and said compartment to close said discharge opening after removal of the tearing flap, and a cover secured to the bag and foldable therearound, said cover having a closure flap to separably enter said transverse fold and hold the fold against unfolding when the cover is folded around the bag, and means for releasably holding said closure flap in cover-closing position.

3. In a package, a bag comprising opposed layers of flexible material forming between them a commodity-receiving compartment, said layers being sealed together at one end of the bag into a sealing flange for closing said compartment, portions of said layers within said flange being unsealed to form a discharge neck for said compartment and said flange having a tearing flap extending across said neck for producing a discharge opening for said compartment when said flap is torn, said bag having a transverse fold in said flange between said tearing flap and said compartment and extending across said neck for closing said discharge opening after said flap has been torn, a cover consisting of a single strip of material secured adjacent one end to the other end of said bag, said cover strip extending along one side of said bag and being folded to form a closure flap having two sections connected by a fold, said sections of the flap being adapted to be disposed in side-by-side relation and extend along the other side of the bag with the free edge of the endmost flap section separably disposed within said transverse fold of the bag as the cover is folded around said bag, and means for releasably holding said closure flap in cover-closing position.

4. In a package, a bag comprising opposed layers of flexible material forming between them

a commodity-receiving compartment, said layers being sealed together at one end of the bag into a sealing flange for closing said compartment, portions of said layers within said flange being unsealed to form a discharge neck for said compartment and said flange having a tearing flap extending across said neck for producing a discharge opening for said compartment when said flap is torn, said bag having a transverse fold in said flange between said tearing flap and said compartment and extending across said neck for closing said discharge opening after said flap has been torn, and a cover comprising a strip of material having a transverse fold adjacent one end around and secured to the other end of said bag, said strip having a fold also at the first-mentioned end of the bag to nicely receive said transverse fold of the bag and to form an integral closure flap which has a transverse fold forming two sections one of which is at the corresponding end of the strip and is adapted to be arranged beneath and in side-by-side relation to the other section with its free end edge separably disposed in said transverse fold of the bag to hold said fold between said edge and the second-mentioned fold of said cover strip, and means to releasably engage the transverse fold of said closure flap for releasably holding said closure flap with said edge thereof in said transverse fold of the bag as described.

5. A package including a bag comprising opposed layers of flexible material joined together to form a commodity receiving compartment, said bag having a transverse fold adjacent one end, portions of said layers in a zone which extends both inwardly and outwardly of said fold being sealed together and other portions within said zone being unsealed to form a discharge neck for said compartment, there being a tearing flap within said zone outwardly of said fold and extending across said neck for producing a discharge opening when said flap is torn, a cover consisting of a body portion at one side of said bag folded at one end around and secured to the other end of the bag with a transverse marginal portion in spaced juxtaposed relation to said bag, the other end of said body portion having a flap hingedly connected thereto to extend around the first-mentioned end and overlie the other side of the bag, said flap comprising two hingedly connected sections one end of one of which is connected to said body portion while the free end of the other section is adapted to separately enter said transverse fold of the bag as the cover is closed around the bag, the portions of said flap adjacent the hinged connection of said sections being insertible between said transverse marginal portion of the cover and said bag to hold the flap in cover-closing position.

6. A package including a bag comprising opposed layers of flexible material joined together to form a commodity receiving compartment, said bag having a transverse fold adjacent one end, portions of said layers in a zone which extends both inwardly and outwardly of said fold being sealed together and other portions within said zone being unsealed to form a discharge neck for said compartment, there being a tearing flap within said zone outwardly of said fold and extending across said neck for producing a discharge opening when said flap is torn, a cover consisting of a strip of material secured to the bag at the side of said fold opposite said open end and foldable transversely of itself to extend around the bag lengthwise of the latter, said cover having a closure flap which is foldable over said transverse fold of the bag and provided with a portion to separably enter said transverse fold and hold the fold between said portion of the flap and one fold of said cover as the cover is folded around the bag, and means for releasably holding said closure flap with said portion thereof in said transverse fold of the bag as described.

7. A package comprising a bag initially closed at one end and having a tearing flap for removing said closed end to form a discharge opening, said bag having a transverse fold inwardly of said tearing flap to close said opening after removal of the tearing flap, and a cover comprising a strip having a body portion at one side of the bag and a transverse fold adjacent one end around and secured to the other end of the bag, said strip having a fold also at the first-mentioned end of the bag to nicely receive and fold over said transverse fold of the bag and to form one section of a closure to overlie the other side of the bag, said closure including a second section in the form of a flap connected directly to the first mentioned section of said closure to separably enter said transverse fold of the bag and hold the fold against unfolding when the cover is folded around the bag, and means for releasably holding said closure in cover-closing position.

8. The package set forth in claim 7 wherein said second section of the closure comprises a flap hingedly connected to said strip along a longitudinal edge thereof and foldable into overlying relation to the bag beneath the first-mentioned section of the closure, said flap being also foldable into said transverse fold of the bag along a line perpendicular to said longitudinal edge of said strip.

9. The package set forth in claim 7 wherein said second section of the closure comprises a flap hingedly connected to said strip along a longitudinal edge thereof and foldable into overlying relation to the bag beneath the first-mentioned section of the closure.

10. The package set forth in claim 7 wherein said second section of the closure comprises a flap hingedly connected to said strip along a longitudinal edge thereof and foldable into overlying relation to the bag beneath the first-mentioned section of the closure with one transverse edge separably disposed within said transverse fold of the bag.

11. A package comprising a bag openable at one end and having a transverse fold inwardly of said end to close the opening, and a cover comprising a strip having a body portion at one side of the bag and a transverse fold adjacent one end around and secured to the other end of the bag, said strip having a fold also at the first-mentioned end of the bag to nicely receive said transverse fold of the bag and to form one section of a closure to overlie the other side of the bag, said closure including a second section in the form of a flap connected directly to the first-mentioned section of said closure to separably enter said transverse fold of the bag and hold the fold against unfolding when the cover is folded around the bag, and means for releasably holding said closure in cover-closing position.

LEROY L. SALFISBERG.