March 26, 1929. T. R. ARDEN 1,706,765

TOY ELECTRIC LOCOMOTIVE

Filed March 23, 1928 3 Sheets-Sheet 1

Fig. 1.

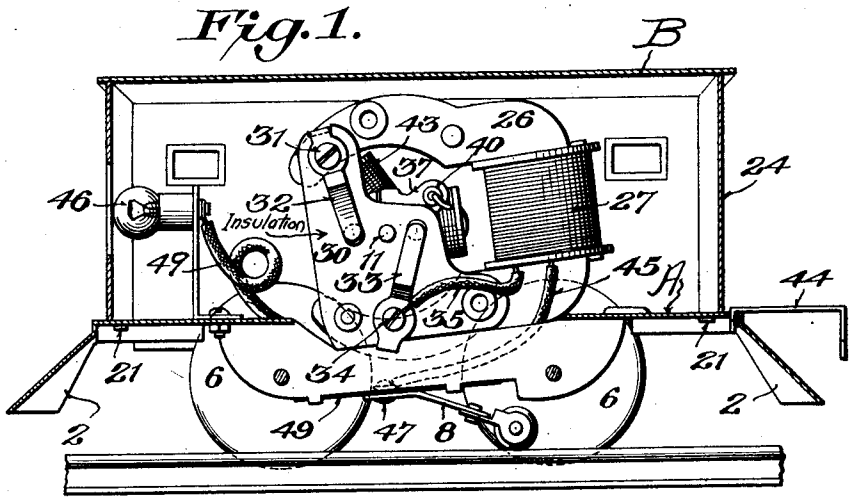

Fig. 2.

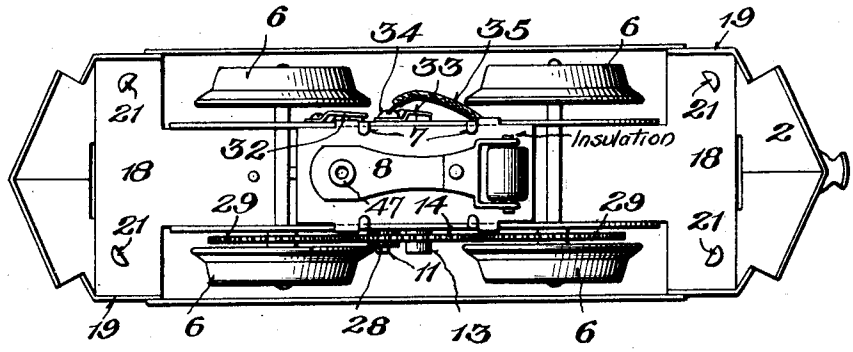

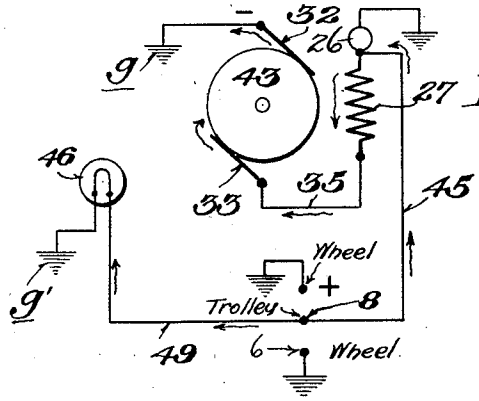

Fig. 10.

Inventor

T. R. Arden,

By D. P. Wehandler

Attorney

March 26, 1929. T. R. ARDEN 1,706,765

TOY ELECTRIC LOCOMOTIVE

Filed March 23, 1928 3 Sheets-Sheet 2

Fig. 3.

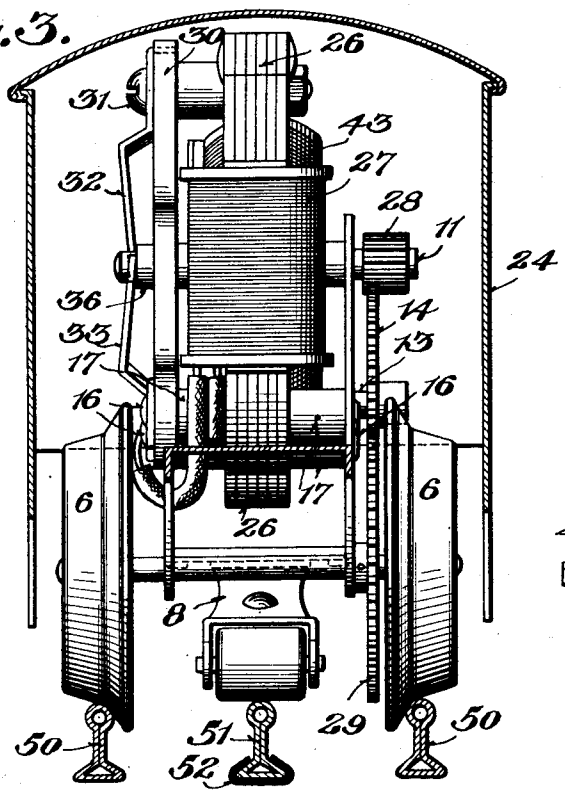

Fig. 8.

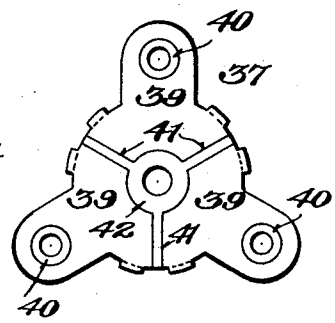

Fig. 9.

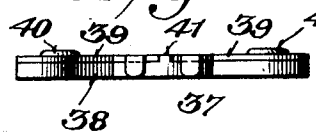

Fig. 4a.

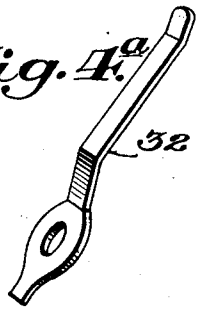

Fig. 4.

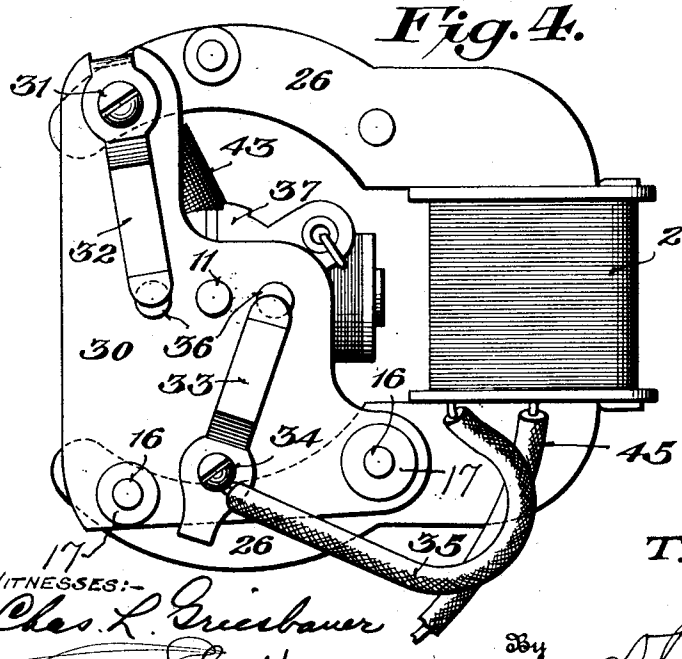

Fig. 5a.

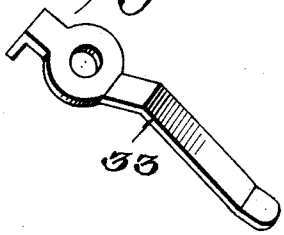

WITNESSES:-
Chas. L. Greenbauer
Emory L. Groff

Inventor
T. R. Arden,
By D. V. Welsh
Attorney

March 26, 1929. T. R. ARDEN 1,706,765

TOY ELECTRIC LOCOMOTIVE

Filed March 23, 1928 3 Sheets-Sheet 3

Fig. 5.

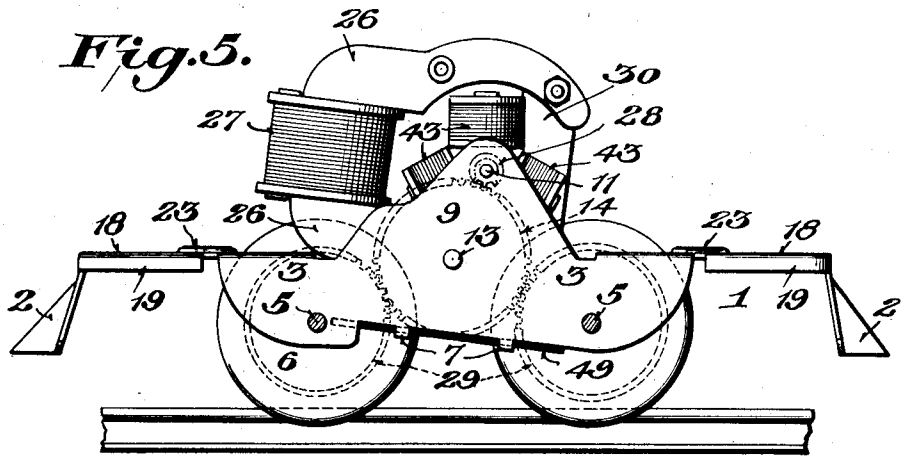

Fig. 6.

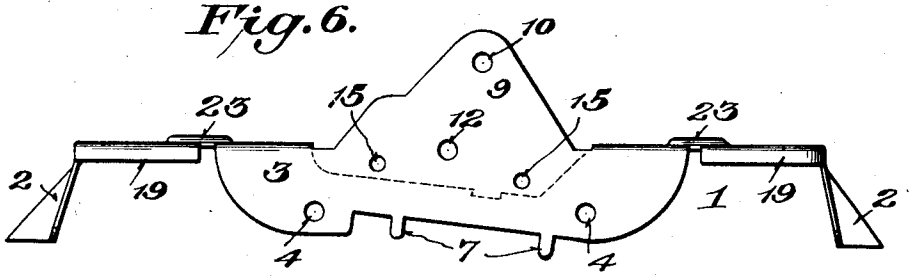

Fig. 7.

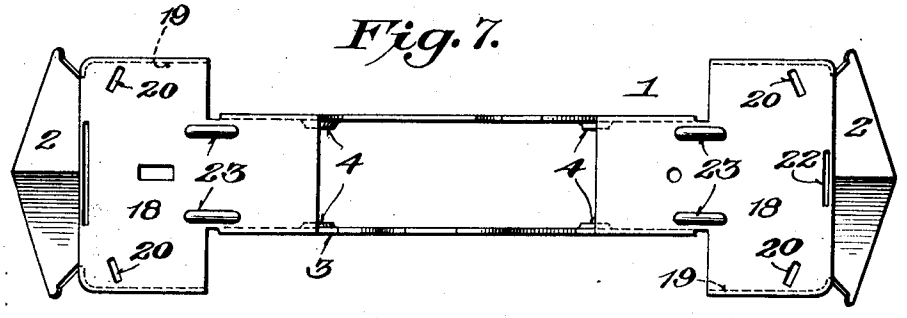

Inventor

T. R. Arden,

By D. V. Welhaven

Attorney

Witnesses:-

Chas. L. Griesbauer

Emory L. Groff

Patented Mar. 26, 1929. 1,706,765

UNITED STATES PATENT OFFICE.

THOMAS R. ARDEN, OF BALDWIN, NEW YORK, ASSIGNOR TO AMERICAN FLYER MFG. CO., OF CHICAGO, ILLINOIS, A CORPORATION OF ILLINOIS.

TOY ELECTRIC LOCOMOTIVE.

Application filed March 23, 1928. Serial No. 264,192.

This invention relates to toy electric vehicles, such as locomotives, and has for its object to provide such a device of simple yet strong construction, attractive in appearance and inexpensive to manufacture.

A primary object of the invention is to provide an electric locomotive having a chassis or platform which not only serves as a base to which the super-structure or locomotive body may be attached in a convenient and expeditious manner, but which also carries therewith the entire driving unit or motor. Heretofore, it has been the practice to make the chassis or platform and the car body in separate parts and also build the motor between separate plates which were suitably attached to the platform or chassis. However, this practice is more or less expensive since the motor has to be made up as a special unit usually comprising a motor frame including side plates and connecting parts which support the wheels and motor field and armature, and also carries the trolley. These parts being made separately require separate operations and additional handling, and while motor units of this type are still used in the more expensive line of toys, nevertheless since it is the object of the invention to provide a neat appearing, durable and cheap toy locomotive it is proposed to eliminate as far as possible all expensive time consuming operations. Therefore, the present construction has in view a platform or chassis which may be made as a single casting or preferably of stamped metal and which is provided with means for supporting the various parts of the motor in such a way that the metallic side plates or "clock plates" as they are sometimes called, are entirely dispensed with and the motor is mounted in such a way as to permit of affording adequate lubrication for the armature shaft.

A further object of the invention is to provide a construction which is self-contained in the respect that the chassis and motor may be assembled in a simple and expeditious manner as one piece, that is, one part which may be handled with greater facility than two parts, and which when completed only requires the placing thereon the cab or super-structure of the locomotive to complete the car.

A still further object of the invention is to provide an improved motor construction which will require only a low voltage to operate and which includes novel brush and armature features that insure a persisting contact between the brushes and the metallic armature segments thereby to prevent slowing down of the motor due to a poor contact which frequently happens where the brushes are not pressed by spring pressure against the segments. While the brushes have been pressed against the faces of the segments by spring pressure in prior structures, nevertheless the construction and arrangement of the springs carrying the contacts was such that the life of the spring readily gave out, due to the failure in resiliency of the spring and the wear between the contact and the segments, and then either a higher voltage is required to operate the motor or the motor would cease to function properly under normal voltage.

With the above and other objects in view which will more readily appear as the nature of the invention is better understood, the same consists in the novel construction, combination and arrangement of parts hereinafter more fully described, illustrated and claimed.

A preferred and practical embodiment of the invention is shown in the accompanying drawings in which

Fig. 1 is a sectional elevation of the vehicle.

Fig. 2 is a bottom plan view of the same.

Fig. 3 is a vertical transverse section of the vehicle.

Fig. 4 is a side elevation of the motor on a larger scale.

Figs. 4ª and 5ª are perspective views of the brush springs.

Fig. 5 is a side elevation with the cab removed, looking at the other side from Fig. 1.

Fig. 6 is a side elevation of the chassis.

Fig. 7 is a plan view of the same.

Fig. 8 is a face view of the motor commutator.

Fig. 9 is a side view of the same, and

Fig. 10 is a diagram of the electric circuits.

Similar reference characters designate corresponding parts throughout the several figures of the drawings.

In accordance with the objects heretofore outlined the present invention includes in its organization a combined frame or chassis and motor unit designated generally as A, and a surmounting housing or cab body des-

ignated generally as B, the latter being adapted to be affixed to the unit A after it has been completely assembled even including the headlight which projects its rays through an opening in the end of the housing which constitutes the cab body. This construction and arrangement provides an easily assembled and economical car which not only facilitates manufacture but also, in use, provides an effective housing for the headlight.

The frame, platform or chassis forming a part of the unit A is an integral structure, preferably and as here shown, a sheet steel stamping providing a plate or body 1, formed at its ends to represent platforms 18, 18, and pilots or cow-catchers 2, 2. The sides of the middle portion of the frame are slit and bent down to form flanges 3, 3 which are provided with holes 4, 4 for the axles, 5, 5 of the wheels 6, 6 and with lugs 7, 7 which serve for the attachment of an insulating plate 49 carrying the trolley 8.

The top central part of the body between said flanges is slit on three sides and bent up to form a flange 9, provided with a hole 10 for the motor armature shaft 11; also with a hole 12 for the axle 13 of the transmission gear 14, and with the holes 15, 15, for rivets or pins 16, 16. These pins serve, in connection with spacing sleeves 17, 17 to assit in supporting the field magnet 27 as will presently appear.

The relatively wide platform ends of the body 1 are provided with short depending flanges 19, 19 and with slots 20, 20, to receive lugs 21 on the housing forming the cab 24. The slot 22 receives couplers 44 to connect the locomotive to cars, not shown, and the pressed up beads or corrugations 23, 23, stiffen the plate at the junction of said ends with the narrower central portion. The top edge of the relatively narrow central portion on the opposite side from the flange 9 is cut away as shown by the dotted line in Fig. 6 to form on that side a seat or bearing 25 for the lower arm 26 of the field magnet, the pole piece of which comprises two such arms 26 and a neck on which is mounted the coil 27.

The armature shaft 11 is journaled at one end in said flange 9 and carries outside the latter the pinion 28, which drives the intermediate gear 14, which in turn drives the gears 29, 29, on the wheel axles 5, 5. The other end of the shaft 11 is journaled in the plate 30, which is of insulating fibre and may be impregnated with oil, or the like, for indirect lubrication. This insulating plate is secured to the lower arm 26 of the magnet by the bolts 16 and to the upper arm 26 by bolt 31, and a spacing sleeve. The said bolt also serves to hold one of the brush springs 32, while the other brush spring 33 is held to said plate by a screw 34, which acts as the binding screw for one of the wires 35 running to the magnet coil 27. These springs, which are of the special formation shown in Figs. 4^a and 5^a, and form part of the circuit, persistently press the brushes 36, 36 mounted in holes in said plate 30, against the commutator 37, see Fig. 8.

The commutator 37 constitutes one of the novel and distinctive features of the invention and is composed of a three-arm plate 38 of insulating material, with three copper plates 39 secured to its branches by eyelets 40, the plate 38 having three integral ribs 41, radiating from a central hub 42 and insulating the copper plates 39 from each other.

The ends of the brushes 36 slide on the face of the plates 39, thereby conveying current to the coils 43 of the armature. The other wire 45 from the magnet coil is connected to the trolley 8 at the binding screw 47. The brush spring 32 is connected to ground at g, while the brush spring 33 is in series with the magnet coil 27 through wire 35, as above described.

The headlight 46 is in a shunt circuit 49, grounded to the frame at g'.

The trolley 8 is carried by an insulating plate 49, secured to the chassis by the lugs 7, 7 aforesaid. The track rails 50, 50, the third rail 51 and its insulating chair 52 are shown in Fig. 4.

All the working parts of the motor are assembled in self-contained units, which render their manufacture simple and assemblage easy.

From the foregoing it will be apparent that the present invention provides a frame, plate or body member 1 which carries the driving wheels and also carries the driving motor geared to said wheels, the said base also carrying therewith means for supporting and attaching the housing or cab and also being formed at the opposite end with the integral pilot or fenders as previously described.

Without further description it is thought that the features and advantages of the invention will be readily apparent to those skilled in the art, and it will of course be understood that changes in the form, proportion and minor details of construction may be resorted to, without departing from the spirit of the invention and scope of the appended claims.

I claim:

1. In a toy electric vehicle, a pressed steel chassis formed at its ends to represent car platforms adapted to support a car body or cab, and provided with downwardly extending flanges to receive the wheel axles and with an upstanding flange to support the motor and transmission gear.

2. In a toy electric vehicle, the combina-

tion with a one-piece chassis having an upwardly extending flange on one side and a seat or bearing surface on the other side, of a motor having its armature shaft journaled in said flange and its field magnet resting on said seat.

3. In a toy electric vehicle, the combination with a one-piece chassis having an upwardly extending flange on one side, of a motor having its shaft journaled at one end in said flange, and a plate of insulating material carried by the arms of the motor field magnet and having a bearing for the other end of said shaft.

4. In a toy electric vehicle, the combination with a one-piece chassis having an upwardly extending flange on one side and a seat or bearing surface on the other, of a motor having its armature shaft journaled in said flange and its field magnet resting on said seat, and a plate of insulating material carried by the arms of said magnet and supported from said flange and having a bearing for the other end of said shaft.

5. In a toy electric vehicle, the combination with a one-piece chassis having an upwardly extending flange on one side, of a motor having its shaft journaled at one end in said flange, a plate of insulating material secured to the field magnet of the motor and having a bearing for the other end of said shaft, brushes slidably mounted in said plate, conductive springs secured on said plate and pressing on said brushes, and a commutator carried by said shaft and on the face of which said brushes slide.

6. In a toy electric vehicle, an electric motor comprising a field magnet and an armature, a commutator for the latter consisting of a plate of insulating material faced by three metallic plates separated from each other by ribs on said plate, a pair of brushes slidably mounted parallel to the shaft, and conductive springs to press said brushes against said commutator.

7. In a toy electric vehicle, a base plate having a lateral upstanding flange, a motor shaft journaled at one end in said flange, a field magnet having a pair of substantially horizontal arms, one of which rests on said base plate, a plate of oil-impregnated fibre secured to said arms and having a bearing for the other end of said shaft, and spring brushes mounted in said insulating plate.

8. In a toy electric vehicle, a base plate, comprising platforms at its ends, depending side flanges on its narrower central portion with bearings for the wheel axles, and an upstanding flange on one side of said central portion, a motor shaft journaled in said upstanding flange, a field magnet supported on said base plate and also from said flange, a vertical-face commutator carried by said shaft, an insulating plate secured to said magnet, brushes slidably mounted in said insulating plate, conductive springs secured to said plate and bearing on said brushes, an insulating plate secured to said depending flanges and a current collector carried by said last mentioned plate.

9. In a toy electric vehicle, the combination with the chassis, of a plate of insulating material secured to the lower part thereof, a trolley secured to the underside of said plate, an upstanding flange on one side of said chassis, a plate of insulating material on the other side of the chassis and supported from said flange, a motor between said flange and said last mentioned plate, brushes slidable in the latter to convey current to said motor, and springs bearing on said brushes.

In testimony whereof I hereunto affix my signature.

THOMAS R. ARDEN.