April 13, 1926.

1,580,415

H. J. CRABBS ET AL

HORN GAP SWITCH

Filed June 5, 1922

2 Sheets-Sheet 1

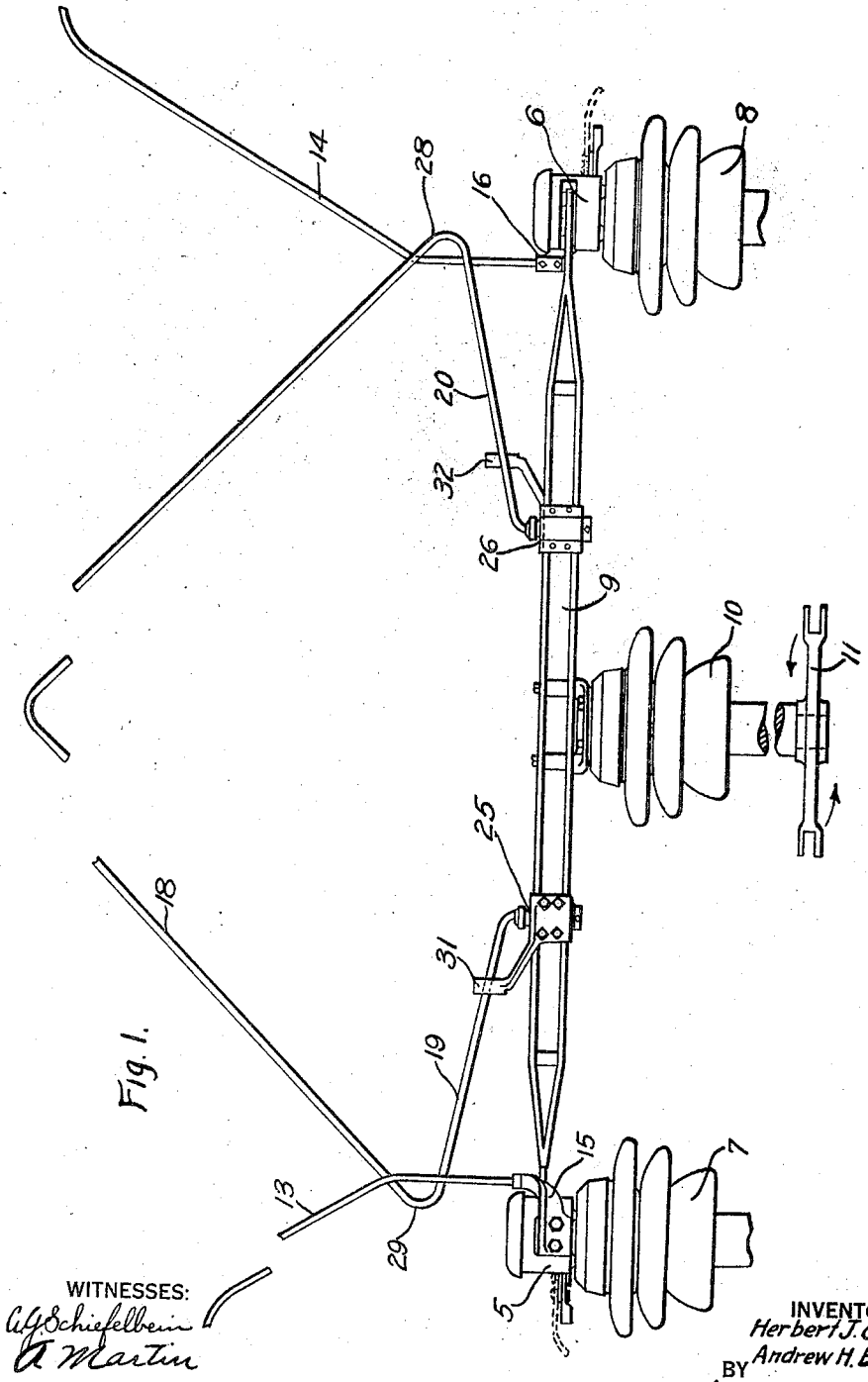

Fig. 1.

WITNESSES:

C. J. Schiefelbein

A. Martin

INVENTORS

Herbert J. Crabbs &

Andrew H. Bakken.

BY

Wesley G. Carr

ATTORNEY

April 13, 1926.

1,580,415

H. J. CRABBS ET AL

HORN GAP SWITCH

Filed June 5, 1922

2 Sheets-Sheet 2

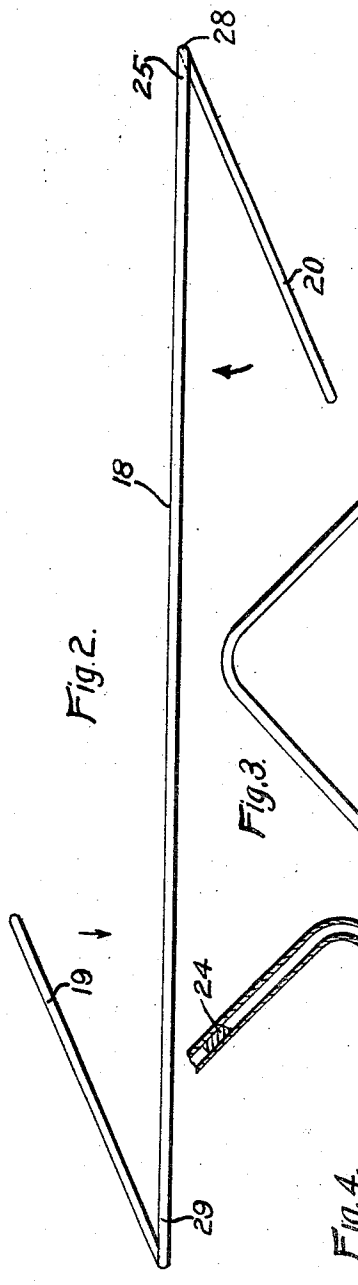

Fig. 2.

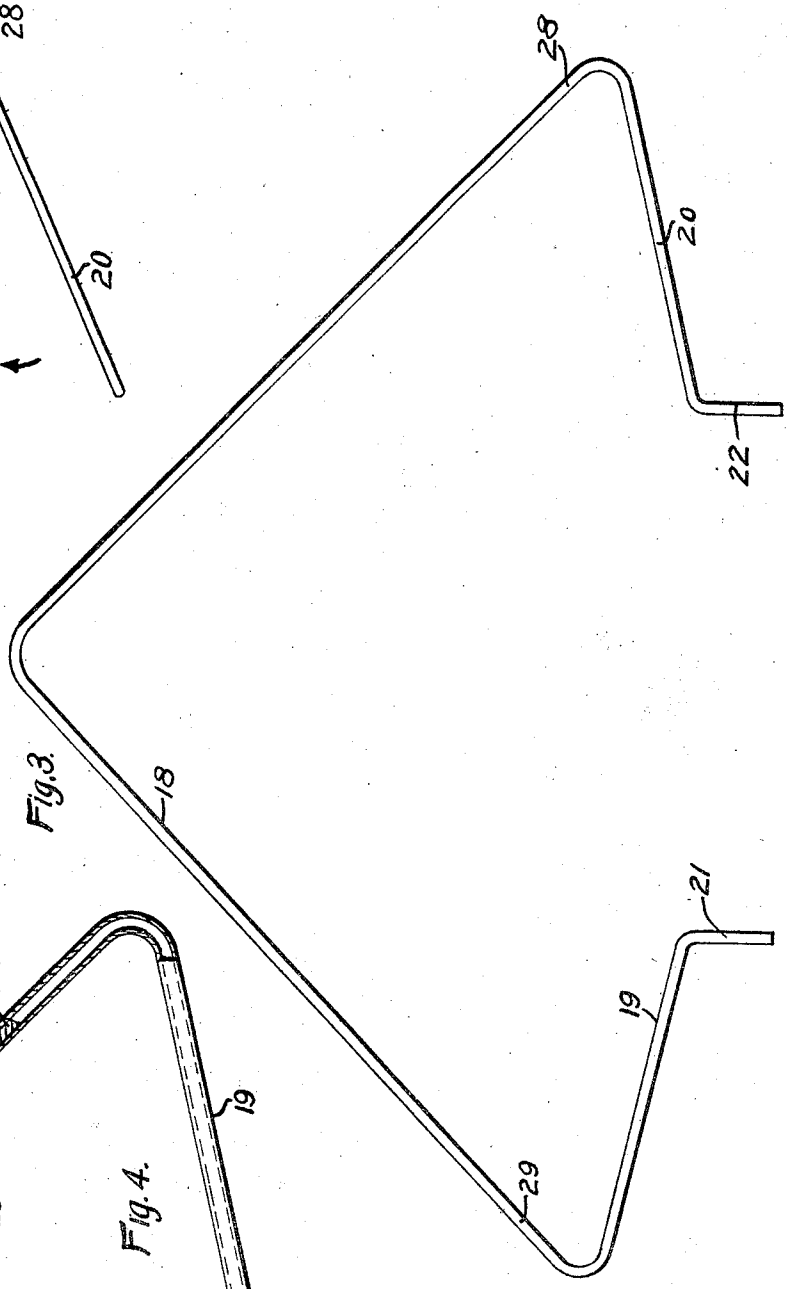

Fig. 3.

Fig. 4.

WITNESSES:

Alf. Schiefelbein

A. Martin

INVENTORS

Herbert J. Crabbs &

Andrew H Bakken.

BY

Wesley G. Carr

ATTORNEY

Patented Apr. 13, 1926. 1,580,415

UNITED STATES PATENT OFFICE.

HERBERT J. CRABBS, OF PITTSBURGH, AND ANDREW H. BAKKEN, OF EDGEWOOD PARK, PENNSYLVANIA, ASSIGNORS TO WESTINGHOUSE ELECTRIC & MANUFACTURING COMPANY, A CORPORATION OF PENNSYLVANIA.

HORN-GAP SWITCH.

Application filed June 5, 1922. Serial No. 566,030.

To all whom it may concern:

Be it known that we, HERBERT J. CRABBS, a citizen of the United States, and a resident of Pittsburgh, in the county of Allegheny and State of Pennsylvania, and ANDREW H. BAKKEN, a citizen of the United States, and a resident of Edgewood Park, in the county of Allegheny and State of Pennsylvania, have invented a new and useful Improvement in Horn-Gap Switches, of which the following is a specification.

Our invention relates to horn gap switches and to an improved form of horn for employment in connection therewith.

Our invention has for one of its objects the provision of an arc horn of simple construction, wherein the deflection set up therein during the opening and closing of the switch with which such horn is associated is distributed throughout substantially the entire length of the horn.

Another object of our invention is to simplify and improve generally the construction of disconnecting switches and arc horns.

As shown in the accompanying drawing,

Figure 1 is a view, in side elevation, of a portion of a high-tension disconnecting switch embodying our invention,

Figs. 2 and 3 are plan and side elevational views, respectively, of one of the arc horns which we employ, and

Fig. 4 is a view, partially in section, of a portion of the horn shown in Figs. 2 and 3.

The switch comprises stationary contact members 5 and 6 that are mounted upon fixed insulating pillars 7 and 8, respectively, and a bridging member 9 that is mounted upon a rotatable insulating pillar 10. The rotatable pillar 10 may be operated from a remote point through a crank 11 by means of suitable levers, not shown.

Stationary arcing horns 13 and 14 are rigidly supported by brackets 15 and 16 respectively, that have electrical connection with the terminal members 5 and 6 and are supported by the pillars 7 and 8, as is common in devices of this character.

A main, or intermediate, arc horn 18 of yielding material is supported by the bridging member 9 and co-operates with the arcing horns 13 and 14 to draw the arcs therefrom, in somewhat the usual manner, upon the breaking of the engagement between the bridging member 9 and the contact members 5 and 6.

The arc horn 18 is of yielding material and, before being mounted on the bridging member 9, is of the shape illustrated more clearly in Fig. 2, that is, the ends 19 and 20 thereof are disposed in opposite angular relationship to the main portion of the horn 18 and are provided with down-turned portions 21 and 22 respectively. Each of the portions 19—21 and 20—22 has a rod 24 of spring steel or similar material disposed therein for substantially the distance indicated in Fig. 4, in order to strengthen the horn.

It will be apparent that when the extended portions 19 and 20 are moved into substantial alinement so that the projections 21 and 22 may be inserted into bearings 25 and 26, respectively, that are carried by the bridging member 9, the horn, throughout substantially its entire length, and particularly at the points thereof nearest to the horns 13 and 14, will be placed under torsional stress and distorted so that the portions 28 and 29 thereof will be deflected from the aligned positions thereof shown in Fig. 2. Because of this distortion, the portions 28 and 29 will be biased or deflected in the direction indicated by the arrows in Fig. 2.

The bearings 25 and 26 are preferably mounted at opposite sides of the bridging member 9, as a matter of convenience, but may, if desired, be placed in alinement longitudinally of the bridging member. The portions 28 and 29 of the horn 18, being normally biased to angularly disposed positions when assembling the device, as above explained, it will be apparent that, as the bridging member 9 is moved to carry it out of engagement with the stationary contact members 5 and 6, the portions 28 and 29 of the horn 18 will remain in engagement with the horns 13 and 14 until after the bridging member has been completely disengaged from the said contact members and that any arc drawn will form across the horns 13, 18 and 14.

Furthermore, it will be observed that upon the drawing of arcs current will not flow through the bearings 25 and 26 but will pass along the main portion of the horn 18, and that the arcs will rise along the horns until

they are extinguished and broken down in the usual manner.

Stop members 31 and 32 are provided on the bridging member 9 for limiting the amount of deflection which may occur in the arc horn 18 when the bridging member 9 has been moved to completely open position.

We claim as our invention:

1. A yielding arc horn provided with two engaging portions that normally lie in a common plane and with two yielding extensions normally angularly disposed with respect to the engaging portions, and means for supporting and maintaining the said extended portions in substantial alinement with the plane normally occupied by the said engaging portions, to cause such portions to be deflected from the said plane.

2. A yielding arc horn provided with two engaging portions normally in substantial alinement and with two yielding extensions angularly disposed in opposite directions with respect to the engaging portions, and means for supporting and maintaining the said extended portions in substantial alinement with the plane normally occupied by the said engaging portions, to cause such portions to be deflected from the said plane, in opposite directions.

3. The combination in a switch having a pair of spaced contact members and a bridging switch member, of an arc horn on each contact member and a one-piece flexible arc horn for engaging the said arc horns having its ends so pivotally connected to the switch member that the portions for engaging the said arc horns are biased toward and engage the horns during movement of the bridging switch member through a portion of its travel.

4. The combination in a switch having a pair of spaced contact members and a bridging switch member, of an arc horn on each contact member and an intermediate arc horn comprising a relatively long flexible conductor constituting a loop having portions for engaging the said arc horns and having its ends so connected to the switch member that the engaging portions are biased toward and yieldingly engage the arc horns prior to closing movement of the switch member and maintain engagement until the switch member has been moved out of engagement with the said contact member.

5. The combination in a switch having a pair of spaced contact members and a bridging switch member, of an arc horn on each contact member and an intermediate arc horn comprising a relatively long flexible conductor constituting a loop having portions for engaging the said arc horns and having its ends so connected to the switch member that torsional stresses distort the conductor and bias the engaging portions toward the said arc horns.

In testimony whereof, we have hereunto subscribed our names this 9th day of May, 1922.

HERBERT J. CRABBS.
ANDREW H. BAKKEN.