PCT

WORLD INTELLECTUAL PROPERTY ORGANIZATION
International Bureau

INTERNATIONAL APPLICATION PUBLISHED UNDER THE PATENT COOPERATION TREATY (PCT)

(51) International Patent Classification 6 : C07C 2/30 — A1

(11) International Publication Number: WO 99/19280

(43) International Publication Date: 22 April 1999 (22.04.99)

(21) International Application Number: PCT/US98/14799

(22) International Filing Date: 17 July 1998 (17.07.98)

(30) Priority Data:
08/951,201 — 14 October 1997 (14.10.97) — US

(63) Related by Continuation (CON) or Continuation-in-Part (CIP) to Earlier Application
US — 08/951,201 (CON)
Filed on — 14 October 1997 (14.10.97)

(71) Applicant *(for all designated States except US)*: PHILLIPS PETROLEUM COMPANY [US/US]; 4th and Keeler, Bartlesville, OK 74004 (US).

(72) Inventors; and
(75) Inventors/Applicants *(for US only)*: WOODARD, William, Miller [US/US]; 1301 Ravenwood Court, Bartlesville, OK 74003 (US). EWERT, Warren, Matthew [US/US]; 3606 E. Mountain Road, Bartlesville, OK 74003 (US). HENSLEY, Harvey, Dean [US/US]; 2527 Dorchester, Bartlesville, OK 74006 (US). LASHIER, Mark, Edward [US/US]; 2901 Kingston Drive, Bartlesville, OK 74006 (US). KREISCHER, Bruce, Edward [US/US]; 504 Dorsett Court, Bartlesville, OK 74006 (US). COWAN, Glyndal, Darren [US/US]; 3921 N.E. Nebraska, Bartlesville, OK 74006 (US). FREEMAN, Jeffrey, Willis [US/US]; 1435 Lariat Drive, Bartlesville, OK 74006 (US). FRANKLIN, Ralph, Vernon [US/US]; 544 S. Rogers, Nowata, OK 74048 (US). KNUDSEN, Ronald, Douglas [US/US]; 1412 Meadow Lane, Bartlesville, OK 74006 (US). ANDERSON, Richard, Lee [US/US]; 6415 Trail Drive, Bartlesville, OK 74006 (US). KALLENBACH, Lyle, Ray [US/US]; 1208 Meadow Lane, Bartlesville, OK 74006 (US).

(74) Agents: RICHARDS, John; Ladas & Parry, 26 West 61st Street, New York, NY 10023 (US) et al.

(81) Designated States: AL, AM, AT, AU, AZ, BA, BB, BG, BR, BY, CA, CH, CN, CU, CZ, DE, DK, EE, ES, FI, GB, GE, GH, GM, HR, HU, ID, IL, IS, JP, KE, KG, KP, KR, KZ, LC, LK, LR, LS, LT, LU, LV, MD, MG, MK, MN, MW, MX, NO, NZ, PL, PT, RO, RU, SD, SE, SG, SI, SK, SL, TJ, TM, TR, TT, UA, UG, US, UZ, VN, YU, ZW, ARIPO patent (GH, GM, KE, LS, MW, SD, SZ, UG, ZW), Eurasian patent (AM, AZ, BY, KG, KZ, MD, RU, TJ, TM), European patent (AT, BE, CH, CY, DE, DK, ES, FI, FR, GB, GR, IE, IT, LU, MC, NL, PT, SE), OAPI patent (BF, BJ, CF, CG, CI, CM, GA, GN, GW, ML, MR, NE, SN, TD, TG).

Published
With international search report.

(54) Title: PROCESS FOR THE TRIMERIZATION OF OLEFINS

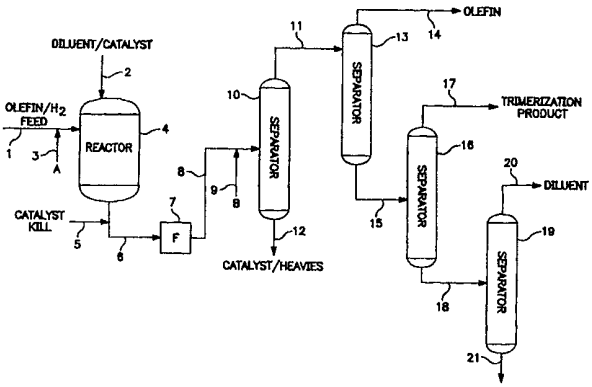

(57) Abstract

Olefins are trimerised in presence of a catalyst system comprising a chromium source, a pyrrole containing compound and a metal alkyl. The process is performed in a reactor comprising an inlet for the catalyst system and the olefin and an outlet. A separator for the desired products is provided.

FOR THE PURPOSES OF INFORMATION ONLY

Codes used to identify States party to the PCT on the front pages of pamphlets publishing international applications under the PCT.

AL	Albania	**ES**	Spain	**LS**	Lesotho	**SI**	Slovenia
AM	Armenia	**FI**	Finland	**LT**	Lithuania	**SK**	Slovakia
AT	Austria	**FR**	France	**LU**	Luxembourg	**SN**	Senegal
AU	Australia	**GA**	Gabon	**LV**	Latvia	**SZ**	Swaziland
AZ	Azerbaijan	**GB**	United Kingdom	**MC**	Monaco	**TD**	Chad
BA	Bosnia and Herzegovina	**GE**	Georgia	**MD**	Republic of Moldova	**TG**	Togo
BB	Barbados	**GH**	Ghana	**MG**	Madagascar	**TJ**	Tajikistan
BE	Belgium	**GN**	Guinea	**MK**	The former Yugoslav Republic of Macedonia	**TM**	Turkmenistan
BF	Burkina Faso	**GR**	Greece			**TR**	Turkey
BG	Bulgaria	**HU**	Hungary	**ML**	Mali	**TT**	Trinidad and Tobago
BJ	Benin	**IE**	Ireland	**MN**	Mongolia	**UA**	Ukraine
BR	Brazil	**IL**	Israel	**MR**	Mauritania	**UG**	Uganda
BY	Belarus	**IS**	Iceland	**MW**	Malawi	**US**	United States of America
CA	Canada	**IT**	Italy	**MX**	Mexico	**UZ**	Uzbekistan
CF	Central African Republic	**JP**	Japan	**NE**	Niger	**VN**	Viet Nam
CG	Congo	**KE**	Kenya	**NL**	Netherlands	**YU**	Yugoslavia
CH	Switzerland	**KG**	Kyrgyzstan	**NO**	Norway	**ZW**	Zimbabwe
CI	Côte d'Ivoire	**KP**	Democratic People's Republic of Korea	**NZ**	New Zealand		
CM	Cameroon			**PL**	Poland		
CN	China	**KR**	Republic of Korea	**PT**	Portugal		
CU	Cuba	**KZ**	Kazakstan	**RO**	Romania		
CZ	Czech Republic	**LC**	Saint Lucia	**RU**	Russian Federation		
DE	Germany	**LI**	Liechtenstein	**SD**	Sudan		
DK	Denmark	**LK**	Sri Lanka	**SE**	Sweden		
EE	Estonia	**LR**	Liberia	**SG**	Singapore		

PROCESS FOR THE TRIMERIZATION OF OLEFINS

BACKGROUND OF THE INVENTION

This invention relates to olefin production and olefin production process improvements.

Olefins, primarily alpha-olefins, have many uses. In addition to uses as specific chemicals, alpha-olefins, especially mono-1-olefins, are used in polymerization processes either as monomers or comonomers to prepare polyolefins, or polymers. These alpha-olefins usually are used in a liquid or gas state. Unfortunately, very few efficient processes to selectively produce a specifically desired alpha-olefin are known.

It is particularly desirable to produce high purity 1-hexene. It is particularly desired to provide an olefin production system which can be used in conjunction with trimerization reaction reactants and/or reaction products.

In accordance with this invention, a process is provided to trimerize olefins comprising, in combination a) a reactor, b) at least one inlet line into said reactor for olefin reactant and catalyst system, c) effluent lines from said reactor for trimerization reaction products, and d) at least one separator to separate desired trimerization reaction products; wherein said catalyst system comprises a chromium source, a pyrrole-containing compound and a metal alkyl.

In accordance with another embodiment of this invention, a process is provided to trimerize ethylene comprising or consisting essentially of, in combination a) a reactor, b) at least one inlet line into said reactor for ethylene reactant and catalyst system, c) effluent lines from said reactor for trimerization reaction products, and d) at least one separator to separate desired 1-hexene reaction product; wherein said catalyst system comprises a chromium source, a pyrrole-containing compound, a metal alkyl, and optionally a halide source. By the term "consisting essentially of" as used herein it is meant that the components or steps recited after this phrase do not include any such further components or steps which would have an adverse effect on the desired qualities or properties of the resulting process or product.

BRIEF DESCRIPTION OF THE DRAWINGS

In the drawings, forming a part hereof, wherein like reference

characters denote like parts in the various figures, FIG. 1 is a schematic representation of one embodiment of an olefin trimerization process using four separators, wherein two of said separators are used following olefin removal. FIG. 2 is a schematic representation of another embodiment of an olefin trimerization process using one separator after olefin removal. FIG. 3 is a schematic representation of a further embodiment of an olefin trimerization process using a solventless trimerization reaction system. FIG. 4 is a schematic representation of yet a further embodiment of an olefin trimerization process wherein reactant and trimerized product(s) are sent directly to an olefin polymerization unit. FIG. 5 is a schematic representation of still another embodiment of an olefin trimerization process wherein catalyst system and reactor heavies are removed after a separation sequence; other embodiments, such as, for example, include use of two columns to separate trimerized product(s), as in FIG. 1, or a solventless system, as in FIG. 3, can be employed as variations. FIG. 6 is a schematic representation of yet another embodiment of an olefin trimerization process wherein catalyst system and reactor heavies stream(s) can undergo further product separation. While these drawings describe embodiments of the invention for the purpose of illustration, the invention is not to be construed as limited by the drawings but the drawings are intended to cover all changes and modifications within the spirit and scope thereof.

DETAILED DESCRIPTION OF THE INVENTION

Catalyst Systems

Catalyst systems useful in accordance with this invention comprise a chromium source, a pyrrole-containing compound and a metal alkyl, all of which have been contacted and/or reacted in the presence of an unsaturated hydrocarbon. Optionally, these catalyst systems can be supported on an inorganic oxide support. These catalyst systems are especially useful for the dimerization and trimerization of olefins, such as, for example, trimerization of ethylene to 1-hexene.

The chromium source can be one or more organic or inorganic compounds, wherein the chromium oxidation state is from 0 to 6. Generally, the chromium source will have a formula of CrX_n, wherein X can be the same or different and can be any organic or inorganic radical, and n is an integer from 1 to

6. Exemplary organic radicals can have from about 1 to about 20 carbon atoms per radical, and are selected from the group consisting of alkyl, alkoxy, ester, ketone, and/or amido radicals. The organic radicals can be straight-chained or branched, cyclic or acyclic, aromatic or aliphatic, can be made of mixed aliphatic, aromatic, and/or cycloaliphatic groups. Exemplary inorganic radicals include, but are not limited to halides, sulfates, and/or oxides.

Preferably, the chromium source is a chromium(II)-and/or chromium(III)-containing compound which can yield a catalyst system with improved trimerization activity. Most preferably, the chromium source is a chromium(III) compound because of ease of use, availability, and enhanced catalyst system activity. Exemplary chromium(III) compounds include, but are not limited to, chromium carboxylates, chromium naphthenates, chromium halides, chromium pyrrolides, and/or chromium dionates. Specific exemplary chromium(III) compounds include, but are not limited to, chromium(III) 2,2,6,6,-tetramethylheptanedionate [$Cr(TMHD)_3$], chromium(III) 2-ethylhexanoate [$Cr(EH)_3$, also referred to as chromium(III) tris(2-ethylhexanoate),] chromium(III) naphthenate [$Cr(Np)_3$], chromium(III) chloride, chromic bromide, chromic fluoride, chromium(III) acetylacetonate, chromium(III) acetate, chromium(III) butyrate, chromium(III) neopentanoate, chromium(III) laurate, chromium(III) stearate, chromium (III) pyrrolides and/or chromium(III) oxalate.

Specific exemplary chromium(II) compounds include, but are not limited to, chromous bromide, chromous fluoride, chromous chloride, chromium(II) bis(2-ethylhexanoate), chromium(II) acetate, chromium(II) butyrate, chromium(II) neopentanoate, chromium(II) laurate, chromium(II) stearate, chromium(II) oxalate and/or chromium(II) pyrrolides.

The pyrrole-containing compound can be any pyrrole-containing compound, or pyrrolide, that will react with a chromium source to form a chromium pyrrolide complex. As used in this disclosure, the term "pyrrole-containing compound" refers to hydrogen pyrrolide, i.e., pyrrole (C_4H_5N), derivatives of hydrogen pyrrolide, substituted pyrrolides, as well as metal pyrrolide complexes. A "pyrrolide" is defined as a compound comprising a 5-membered, nitrogen-containing heterocycle, such as for example, pyrrole, derivatives of pyrrole, and mixtures

thereof. Broadly, the pyrrole-containing compound can be pyrrole and/or any heteroleptic or homoleptic metal complex or salt, containing a pyrrolide radical, or ligand. The pyrrole-containing compound can be either affirmatively added to the reaction, or generated in-situ.

Generally, the pyrrole-containing compound will have from about 4 to about 20 carbon atoms per molecule. Exemplary pyrrolides are selected from the group consisting of hydrogen pyrrolide (pyrrole), lithium pyrrolide, sodium pyrrolide, potassium pyrrolide, cesium pyrrolide, and/or the salts of substituted pyrrolides, because of high reactivity and activity with the other reactants. Examples of substituted pyrrolides include, but are not limited to, pyrrole-2-carboxylic acid, 2-acetylpyrrole, pyrrole-2-carboxyaldehyde, tetrahydroindole, 2,5-dimethylpyrrole, 2,4-dimethyl-3-ethylpyrrole, 3-acetyl-2,4-dimethylpyrrole, ethyl-2,4-dimethyl-5-(ethoxycarbonyl)-3-pyrrole-proprionate, ethyl-3,5-dimethyl-2-pyrrolecarboxylate, and mixtures thereof. When the pyrrole-containing compound contains chromium, the resultant chromium compound can be called a chromium pyrrolide.

The most preferred pyrrole-containing compounds used in a trimerization catalyst system are selected from the group consisting of hydrogen pyrrolide, i.e., pyrrole (C_4H_5N), 2,5-dimethylpyrrole and/or chromium pyrrolides because of enhanced trimerization activity. Optionally, for ease of use, a chromium pyrrolide can provide both the chromium source and the pyrrole-containing compound. As used in this disclosure, when a chromium pyrrolide is used to form a catalyst system, a chromium pyrrolide is considered to provide both the chromium source and the pyrrole-containing compound. While all pyrrole-containing compounds can produce catalyst systems with high activity and productivity, use of pyrrole and/or 2,5-dimethylpyrrole can produce a catalyst system with enhanced activity and selectivity to a desired product(s).

The metal alkyl can be any heteroleptic or homoleptic metal alkyl compound. One or more metal alkyls can be used. The alkyl ligand(s) on the metal can be aliphatic and/or aromatic. Preferably, the alkyl ligand(s) are any saturated or unsaturated aliphatic radical. The metal alkyl can have any number of carbon atoms. However, due to commercial availability and ease of use, the metal

alkyl will usually comprise less than about 70 carbon atoms per metal alkyl molecule and preferably less than about 20 carbon atoms per molecule. Exemplary metal alkyls include, but are not limited to, alkylaluminum compounds, alkylboron compounds, alkyl magnesium compounds, alkyl zinc compounds and/or alkyl lithium compounds. Exemplary metal alkyls include, but are not limited to, n-butyl lithium, s-butyllithium, t-butyllithium, diethylmagnesium, diethylzinc, triethylaluminum, trimethylaluminum, triisobutylalumium, and mixtures thereof.

Preferably, the metal alkyl is selected from the group consisting of non-hydrolyzed, i.e., not pre-contacted with water, alkylaluminum compounds, derivatives of alkylaluminum compounds, halogenated alkylaluminum compounds, and mixtures thereof for improved product selectivity, as well as improved catalyst system reactivity, activity, and/or productivity. The use of hydrolyzed metal alkyls can result in decreased olefin, i.e., liquids, production and increased polymer, i.e., solids, production.

Most preferably, the metal alkyl is a non-hydrolyzed alkylaluminum compound, expressed by the general formulae AlR_3, AlR_2X, $AlRX_2$, AlR_2OR, AlRXOR, and/or $Al_2R_3X_3$, wherein R is an alkyl group and X is a halogen atom. Exemplary compounds include, but are not limited to, triethylaluminum, tripropylaluminum, tributylaluminum, diethylaluminum chloride, diethylaluminum bromide, diethylaluminum ethoxide, diethylaluminum phenoxide, ethylaluminum dichloride, ethylaluminum sesquichloride, and mixtures thereof for best catalyst system activity and product selectivity. The most preferred alkylaluminum compound is triethylaluminum, for best results in catalyst system activity and product selectivity.

Usually, contacting and/or reacting of the chromium source, pyrrole-containing compound and a metal alkyl is done in an unsaturated hydrocarbon and can be done in any manner known in the art. For example, a pyrrole-containing compound can be contacted with a chromium source and then with a metal alkyl. Optionally, a pyrrole-containing compound can be contacted with a metal alkyl and then with a chromium source. Numerous other contacting procedures can be used, such as for example, contacting all catalyst system components in the trimerization reactor.

The unsaturated hydrocarbon can be any aromatic or aliphatic hydrocarbon, in a gas, liquid or solid state. Preferably, to effect thorough contacting of the chromium source, pyrrole-containing compound, and metal alkyl, the unsaturated hydrocarbon will be in a liquid state. The unsaturated hydrocarbon can have any number of carbon atoms per molecule. Usually, the unsaturated hydrocarbon will comprise less than about 70 carbon atoms per molecule, and preferably, less than about 20 carbon atoms per molecule, due to commercial availability and ease of use. Exemplary unsaturated, aliphatic hydrocarbon compounds include, but are not limited to, ethylene, 1-hexene, 1,3-butadiene, and mixtures thereof. The most preferred unsaturated aliphatic hydrocarbon compound is 1-hexene, because of elimination of catalyst system preparation steps and 1-hexene can be a reaction product. Exemplary unsaturated aromatic hydrocarbons include, but are not limited to, toluene, benzene, xylene, ethylbenzene, mesitylene, hexamethylbenzene, and mixtures thereof. Unsaturated, aromatic hydrocarbons are preferred in order to improve catalyst system stability, as well as produce a highly active and selective catalyst system. The most preferred unsaturated aromatic hydrocarbon is selected from the group consisting of toluene and ethylbenzene, with ethylbenzene most preferred for best catalyst system activity and product selectivity, as well as ease of use.

Optionally, and preferably, a halide source is also present in the catalyst system composition. The presence of a halide source in the catalyst system composition can increase catalyst system activity and productivity, as well as increase product selectivity. Exemplary halides include, but are not limited to fluoride, chloride, bromide, and/or iodide. Due to ease of use and availability, chloride is the preferred halide. Based on improved activity, productivity, and/or selectivity, bromide is the most preferred halide.

The halide source can be any compound containing a halogen. Exemplary compounds include, but are not limited to, compounds with a general formula of R_mX_n, wherein R can be any organic and/or inorganic radical, X can be a halide, selected from the group consisting of fluoride, chloride, bromide, and/or iodide, and m + n can be any number greater than 0. If R is an organic radical, preferably R has from about 1 to about 70 carbon atoms per radical and, most

preferably from 1 to 20 carbon atoms per radical, for best compatibility and catalyst system activity. If R is an inorganic radical, preferably R is selected from the group consisting of aluminum, silicon, germanium, hydrogen, boron, lithium, tin, gallium, indium, lead, and mixtures thereof. Specific exemplary compounds include, but are not limited to, methylene chloride, chloroform, benzylchloride, silicon tetrachloride, tin(II) chloride, tin(IV) chloride, germanium tetrachloride, boron trichloride, aluminum tribromide, aluminum trichloride, 1,4-di-bromobutane, and/or 1-bromo-butane. Most preferably, the halide source is selected from the group consisting of tin (IV) halides, germanium halides, and mixtures thereof.

Furthermore, the chromium source, the metal alkyl and/or unsaturated hydrocarbon can contain and provide a halide to the reaction mixture. Preferably, if a halide is present, the halide source is an alkylaluminum halide and is used in conjunction with alkylaluminum compounds due to ease of use and compatibility, as well as improved catalyst system activity and product selectivity. Exemplary alkyl-aluminum halides include, but are not limited to, diisobutylaluminum chloride, diethylaluminum chloride, ethylaluminum sesquichloride, ethylaluminum dichloride, diethylaluminum bromide, diethylaluminum iodide, and mixtures thereof.

It should be recognized, however, that the reaction mixture comprising a chromium source, pyrrole-containing compound, metal alkyl, unsaturated hydrocarbon and optionally a halide can contain additional components which do not adversely affect and can enhance the resultant catalyst system.

Reactants

Trimerization, as used in this disclosure, is defined as the combination of any two, three, or more olefins, wherein the number of olefin, i.e., carbon-carbon double bonds is reduced by two. Reactants applicable for use in the trimerization process of this invention are olefinic compounds which can a) self-react, i.e., trimerize, to give useful products such as, for example, the self reaction of ethylene can give 1-hexene and the self-reaction of 1,3-butadiene can give 1,5-cyclooctadiene; and/or b) olefinic compounds which can react with other olefinic compounds, i.e., co-trimerize, to give useful products such as, for example, co-trimerization of ethylene plus hexene can give 1-decene and/or 1-tetradecene, co-trimerization of ethylene and 1-butene can give 1-octene, co-trimerization of 1-

decene and ethylene can give 1-tetradecene and/or 1-docosene. For example, the number of olefin bonds in the combination of three ethylene units is reduced by two, to one olefin bond, in 1-hexene. In another example, the number of olefin bonds in the combination of two 1,3-butadiene units, is reduced by two, to two olefin bonds in 1,5-cyclooctadiene. As used herein, the term "trimerization" is intended to include dimerization of diolefins, as well as "co-trimerization", both as defined above.

Suitable trimerizable olefin compounds are those compounds having from about 2 to about 30 carbon atoms per molecule and having at least one olefinic double bond. Exemplary mono-1-olefin compounds include, but are not limited to acyclic and cyclic olefins such as, for example, ethylene, propylene, 1-butene, 2-butene, isobutylene, 1-pentene, 2-pentene, 1-hexene, 2-hexene, 3-hexene, 1-heptene, 2-heptene, 3-heptene, the four normal octenes, the four normal nonenes, and mixtures of any two or more thereof. Exemplary diolefin compounds include, but are not limited to, 1,3-butadiene, 1,4-pentadiene, and 1,5-hexadiene. If branched and/or cyclic olefins are used as reactants, while not wishing to be bound by theory, it is believed that steric hindrance could hinder the trimerization process. Therefore, the branched and/or cyclic portion(s) of the olefin preferably should be distant from the carbon-carbon double bond.

Catalyst systems produced in accordance with this invention preferably are employed as trimerization catalyst systems.

Products

The olefinic products of this invention have established utility in a wide variety of applications, such as, for example, as monomers for use in the preparation of homopolymers, copolymers, and/or terpolymers. The olefinic products of this invention can have from about 6 to about 100 carbon atoms per molecule. As discussed previously, trimerization of ethylene can yield hexenes, preferably 1-hexene. Trimerization of ethylene and 1-hexene can produce decenes, preferably 1-decene. Trimerization of 1,3-butadiene can produce 1,5-cyclo-octadiene.

Drawings

A further understanding of some of the aspects of this invention can

be found by referring to the attached schematic flow diagrams, in combination with the following descriptions. Various additional pumps, valves, heaters, coolers and other conventional equipment necessary for the practice of this invention will be familiar to one skilled in the art. Said additional equipment has been omitted from the drawings for the sake of clarity. The descriptions of the drawings provide one method for operating the process. However, it is understood that while these drawings are general representations of the process, minor changes can be made in adapting the drawings to the various conditions within the scope of the invention. It is also understood that numerical references in the drawings are consistent throughout the drawings. For example, inlet line 1, an olefin and optionally hydrogen inlet line, is an olefin and optionally hydrogen inlet line in all drawings.

As used in this disclosure, "olefin feed" refers to compounds more fully defined in the "Reactant" portion of this disclosure, such as, for example, ethylene, propylene, and/or 1-hexene. "Solvent" refers to a diluent or medium in which the trimerization process occurs; however, by no means is the solvent necessarily an inert material; it is possible that the solvent can contribute to a trimerization reaction process. Exemplary solvents include, but are not limited to, cyclohexane, methylcyclohexane, isobutane, 1-hexene, and mixtures of two or more thereof. "Reactor effluent" refers to all components that can be present in and can be removed from a trimerization reactor, including, but not limited to, unreacted olefin, catalyst system, trimerization product(s) and/or reaction co-product(s), also referred to as reaction by-product(s). "Catalyst kill" refers to those compounds which can deactivate, either partially or completely, catalyst system used in the trimerization process. "Heavies" refers to reaction co-product(s) which have a higher molecular weight than olefin reactants and/or the desired trimerization reaction product(s), and include higher olefinic products, such as, for example decenes and tetradecenes, as well as polymeric products.

Referring to FIG. 1, olefin feed, and optionally hydrogen, is fed through inlet line 1 into trimerization reactor 4. Inlet line 2 introduces catalyst system and optionally, solvent into trimerization reactor 4. Inlet line 3, an optional embodiment of the invention, can supply olefin feed from a second source, such as, for example an ethylene effluent, or discharge, stream from a polyethylene poly-

merization production facility. Trimerization reactor effluent comprising trimerized product(s), reaction co-product(s), unreacted olefin, catalyst system, and other reactor components is removed via effluent line 6. Catalyst system deactivation, i.e., "kill", components, if desired are fed via inlet line 5 into effluent line 6. It should be noted that lines 1, 2, 3, and 6 can be located anywhere on trimerization reactor 4. However, the location of lines 1, 2, and 3 must allow olefin feed stream to thoroughly contact catalyst system from line 2 in trimerization reactor 4. Filter 7 is an optional embodiment of the invention which can remove particulates, such as, for example, catalyst fines and undesirable polymeric products, from effluent line 6. For example, if the reactor effluent stream in effluent line 6 is maintained at a higher temperature, fewer particulates, such as, for example particulates resulting from undesirable polymer product(s), can form and filter 7 may not be necessary. While not wishing to be bound by theory, it is believed that higher reactor and line temperatures can inhibit solidification of undesirable polymer particles, i.e., higher temperatures can keep undesirable polymer particles from precipitating. However, if the reactor effluent stream in effluent line 6 is allowed to cool and particulates can form, filter 7 can be used. Line 8 can be either filter 7 effluent or a continuation of effluent line 6 and line 8 comprises little or no particulates. Inlet line 9 is a further optional embodiment of the invention and can include a stream of heavies to be separated, such as, for example a discharge effluent stream from a polyethylene production plant. Separator 10 separates catalyst system and other heavies from lighter olefins. Effluent line 12 is an effluent stream comprising catalyst system and other heavy olefins from separator 10. Effluent line 11 also is an effluent stream from separator 10 and can be used to recover light olefins, including trimerized products. Separator 13 can be used to separate trimerized products from olefin reactants via effluent line 14 and solvent via effluent line 15. Separator 16 can be used to separate desired trimerization product(s) via effluent line 17 from trimerization reaction solvent via effluent line 18. Separator 19 can be used to separate trimerization reaction solvent via effluent line 20 for reuse or recycle from other components which can be removed via effluent line 21.

Referring now to FIG. 2, another embodiment of the invention, wherein like numbers represent like components, separator 22 and lines 23, 24, and

25 are added. Separator 22 can be used to separate trimerization product(s) via effluent line 23 from trimerization reaction solvent via effluent line 24 and any other remaining reaction components via effluent line 25.

Referring now to FIG. 3, another embodiment of the invention, wherein like numbers represent like components and wherein a solvent is not used during the trimerization process. Therefore, separator 26 is used to separate trimerization product(s) via effluent line 27 from all other remaining components removed via effluent line 28.

Referring now to FIG. 4, another embodiment of the invention wherein like numbers represent like components, separator 29 is used to separate olefin feed and trimerization product(s) via effluent line 30. If desired, olefin feed and trimerization product(s) can be fed directly to an olefin polymerization unit where an olefin feed and trimerized product(s) are polymerized to form a copolymer, such as, or example an ethylene hexene copolymer. Solvent, if present in trimerization reactor 4, can be removed from separator 29 via effluent line 31. Effluent line 32 removes excess and/or deactivated catalyst system and other heavies which can be produced during the trimerization reaction.

Referring to FIG. 5, again like numbers represent like system components, separator 33 is used to recover any unreacted olefin feed via effluent line 34. Effluent line 35 carries all non-recovered olefin products to separator 37. Inlet line 36 is similar to inlet line 9 in previous drawings wherein a stream of heavies from another location, such as, for example a polyethylene plant, is added for separation. Separator 37 can be used to separate trimerization product(s) via effluent line 38, solvent via effluent line 39, and catalyst and other products via effluent line 40.

Referring now to FIG. 6, another embodiment of the invention, wherein like numbers represent like components and wherein a catalyst system and heavies effluent line can be fed to separator 41 to separate trimerization reaction by-products, such as decenes via effluent line 42 from other reactor effluent components via effluent line 43, such as, for example catalyst system, polymer particulates, other higher olefinic by-products, including some decenes. It should be noted that some of the decenes must be kept in effluent line 43 in order to maintain

flowability of catalyst system effluent and/or discharge products and possible polymer particulates, if not removed previously in filter 7. Decenes removed via effluent line 42 can be recovered or routed for additional use, such as hydrogenation to commercially useful products such as Soltrol ® 100.

Note that the invention is not limited only to the embodiments specifically shown in the figures. For example FIG. 5 shows one separator 37 after an olefin removal separator 33. Other variants, such as using two separator columns to separate trimerized product(s) and solvent, such as in FIG. 1 with separator 16 and separator 19, can be used or solvent removal may not be necessary, as shown in FIG. 3 with separator 26.

Reaction Conditions

Reaction products, i.e., olefin trimers as disclosed in this specification, can be prepared with the disclosed catalyst systems by solution reaction, slurry reaction, and/or gas phase reaction techniques using conventional equipment and contacting processes. Contacting of the olefin feed with a catalyst system can be effected by any manner known in the art. One convenient method is to suspend the catalyst system in a solvent, i.e., diluent or medium, and to agitate the mixture to maintain a uniform catalyst system concentration throughout the reaction mixture and/or maintain the catalyst system in solution throughout the trimerization process. Other known contacting methods can also be employed.

A trimerization process can be carried out in an inert solvent, such as a paraffin, cycloparaffin, or aromatic hydrocarbon. Exemplary reactor diluents include, but are not limited to, isobutane, cyclohexane and methylcyclohexane. Isobutane can be used to improve process compatibility with other known olefin production processes. However, a homogenous trimerization catalyst system can be more soluble in cyclohexane. Therefore, a preferred solvent for a homogeneous catalyzed trimerization process is cyclohexane.

Alternatively, a "solventless" reaction system can be used. In a solventless system, reaction product can be the reactor "solvent" or diluent. For example, if ethylene is trimerized to 1-hexene, 1-hexene can be used in the reactor as a solvent, or diluent. A solventless reaction system is preferred in that fewer separation steps can be used following completion of the trimerization reaction.

Reaction temperatures and pressures can be any temperature and pressure which can trimerize the olefin reactants. When the reactant is predominately ethylene, a temperature in the range of about 0° to about 300°C. (about 32° to about 575°F.) generally can be used. Preferably, when the reactant is predominately ethylene, a temperature in the range of about 60° to about 275°C. (about 140° to about 530°F.) is employed. Most preferably, reactor temperature is within a range of 110° to 125°C. (235° to 255°F.). Reactor temperatures that are too low can cause polymeric products to precipitate out of the process can decrease product selectivity by increasing the production of polymeric products. Reactor temperatures that are too high can decrease catalyst system activity, negatively affect reaction selectivity and can cause decomposition of the catalyst system and reaction products. However, reactor temperature ranges can vary if other solvents are used in the trimerization process.

Generally, reaction pressures are within a range of about atmospheric to about 2500 psig. Selection of reaction pressure depends on the solvent, or diluent, used in the reactor. Preferably, when using a diluent other than 1-hexene, reaction pressures within a range of about atmospheric to about 1500 psig and most preferably, within a range of 600 to 1000 psig are employed. Preferably, when using 1-hexene as the diluent, reaction pressures within a range of about atmospheric to about 2000 psig and most preferably, within a range of 1100 to 1600 psig are employed. Too low of a reaction pressure can result in low catalyst system activity.

Optionally, hydrogen can be added to the reactor to enhance product selectivity, i.e., reduce formation of polymeric products.

A further understanding of the present invention and its advantages also will be provided by reference to the following examples.

EXAMPLES

Example 1

This example shows different methods of preparing trimerization catalyst systems and the trimerization results. Runs 101-106 demonstrate catalyst system preparation outside of the trimerization reactor and feeding catalyst system into the trimerization reactor. Runs 107-109 demonstrate a catalyst system

preparation method inside the trimerization reactor. Runs 110-112 demonstrate another catalyst system preparation method inside the trimerization reactor. All catalyst system preparation was carried out under an inert atmosphere (nitrogen or helium) using standard Schlenk techniques, if applicable. All solvents, or diluents, were dried over mole sieves/alumina and purged with nitrogen before use. The components used to prepare the catalyst systems and the molar ratios of chromium to other catalyst system components are listed in Table 1.

Catalyst systems used in Runs 101-106 were prepared by dissolving chromium tris(2-ethylhexanoate) [$Cr(EH)_3$] in toluene or ethylbenzene (40 ml/g $Cr(EH)_3$). In a separate container, triethylaluminum (TEA) and a chloride source were mixed together. 2,5-Dimethylpyrrole (DMP) was added to either the $Cr(EH)_3$ solution or the aluminum alkyl-chloride source. The chromium mixture, either with or without DMP, depending on the preparation method selected above, was added to the aluminum mixture and the resulting brown-yellow solution was stirred for a time within a range of 10 minutes to one (1) hour. The resulting solution then was filtered through a celite frit and was diluted to the desired concentration.

Catalyst systems used in Runs 107-109 were prepared by dissolving $Cr(EH)_3$ in cyclohexane and diluting to the desired concentration with additional cyclohexane. This solution was charged to a catalyst feed tank to the reactor. TEA and chloride sources were mixed together in 200 ml of cyclohexane. DMP was added to the aluminum alkyl/chloride source and allowed to react for 5 minutes. This solution, along with the solvent for that particular run, was charged to a solvent feed tank to the reactor. Thus, the aluminum alkyl/chloride source/DMP mixture was fed to the reactor in the same stream as the reactor solvent, but separately from the chromium source.

Catalyst systems used in Runs 110-112 were prepared by dissolving $Cr(EH)_3$ in cyclohexane and diluting to the desired concentration with additional cyclohexane. This solution was charged to a catalyst feed tank to the reactor. TEA and chloride sources were mixed together in 100 ml of cyclohexane. DMP was added to the aluminum alkyl/chloride source and allowed to react for 5 minutes. The resulting aluminum alkyl/chloride source/DMP solution was diluted to the desired concentration with additional cyclohexane and then charged an aluminum

feed tank to the reactor. Thus, the aluminum alkyl/chloride source/DMP mixture was fed to the reactor in a separate stream from either the reactor solvent or the chromium source.

All trimerization reactions disclosed in Runs 101-112 can be considered continuous feed reactions, i.e., not batch reactions. The feed rates and temperatures of all Runs are given in Table 2. Reactor volume in Runs 101, 105 and 110-112 was 0.264 gallons; reactor volume in all other Runs was one (1) gallon. Reactor pressure in Run 102 was 1465 psia; reactor pressure in all other Runs was 800 psia. The temperature and pressure of the reactor were continuously controlled at the desired values. Reactor temperature was controlled by an internal coiled pipe. Each Run sequence was started by turning on a solvent pump to fill the autoclave reactor and heating the reactor to the desired temperature. The reactor was purged with the solvent shown in Table 2 for 30 minutes. Additional process conditions are given in Table 1.

In Runs 101-107, catalyst system was fed to the reactor at double the desired rate for 30 minutes prior to the introduction of ethylene and then reduced to the desired feed rate. In Runs 101 and 103-106, solvent feed continued during catalyst system feed and ethylene/hydrogen mixture feed. In Run 102, 1-hexene was fed with catalyst system until the addition of the ethylene/hydrogen mixture; 1-hexene feed was stopped when the ethylene/hydrogen mixture feed began.

In Runs 107-109, two different reactor inlets simultaneously fed a) a catalyst system portion comprising a $Cr(EH)_3$ solution and b) solvent and another catalyst system portion comprising an aluminum alkyl/chloride source/DMP solution.

In Runs 110-112, three different reactor inlets simultaneously fed a) a catalyst system portion comprising a $Cr(EH)_3$ solution, b) another catalyst system portion comprising an aluminum alkyl/chloride source/DMP solution, and c) solvent.

Upon exit from the reactor, the catalyst/product solution stream was deactivated with an alcohol, cooled and filtered in a pressure vessel through a steel sponge filter material to remove polymeric solids. The product stream was taken to a product storage tank.

Each reaction was monitored for 6 hours. On-line samples were

collected once every hour and analyzed by gas chromatography to determine reactor effluent composition. Product analyses are given in Table 2.

Table 1

Catalyst Components and Process Conditions

	Moles/mole Cr											
Run	DMP	TEA	Chloride	Chloride Source	Solvent	Reactor Temp, °C	Catalyst Concent. MgCr/ml	Catalyst Feed Rate, ml/hr	Al Feed Rate, ml/hr	C_2 = Feed Rate, g/hr	Solvent Feed Rate, gallons/ hr	H_2 Feed Rate, l/hr
101	3.0	11.0	8.0	DEAC	Isobutane	100	0.35	45	---	275	0.60	4.40
102	1.8	9.0	2.5	EADC	1-Hexene	115	0.50	30	---	1570	0.00	15.7
103	1.8	6.5	5.0	DEAC	Cyclohexane	115	0.80	30	---	1430	1.20	5.20
104	3.0	11.0	8.0	DEAC	Cyclohexane	115	0.17	30	---	1450	1.35	4.10
105	3.0	11.0	8.0	DEAC	n-Heptane	120	0.25	30	---	560	0.50	3.10
106	3.0	11.0	8.0	DEAC	Methyl-cyclohexane	128	1.01	45	---	1640	1.35	8.20
					In-situ - Al in solvent							
107	3.0	11.0	8.0	DEAC	Cyclohexane	115	0.33	30	---	1430	1.20	5.20
108	3.0	19.0	1.3	C2C16	Cyclohexane	115	0.33	30	---	1430	1.20	5.20

109	16.0	50.0	63.0	DEAC	Cyclohexane	115	0.04	30	---	1430	1.20	5.20
					In-situ - A1 in Tank							
110	3.0	11.0	8.0	DEAC	Cyclohexane	120	.29	25	25	550	0.40	3.10
111	3.0	11.0	8.0	DEAC	Cyclohexane	120	.29	25	25	550	0.40	3.10
112	3.0	11.0	8.0	DEAC	Cyclohexane	120	.29	25	25	550	0.40	3.10

Table 2

Product Analysis (weight percents)

Run	% Butenes	% 1-Hexene	% Internal Hexenes	Hexene Purity, %	% Octenes	% Decenes	% Ethylene Conversion	Polymer Produced, g	Productivity, g olefin/g Cr-hr	Productivity, g olefin/g Metals - hr
101	<0.1	93.7	1.4	98.6	0.3	4.6	42.3	0.4	7000	640
102	0.4	88.8	0.8	99.1	0.5	8.8	78.1	2.9	71800	10300
103	0.1	84.5	0.7	99.2	0.2	13.3	86.6	2.4	43400	6220
104	0.1	94.1	0.4	99.6	0.3	5.1	68.0	1.6	185000	17000
105	0.1	91.8	0.8	99.1	0.3	6.7	72.0	0.4	49300	4540
106	0.3	85.0	1.5	98.3	0.4	11.9	83.2	1.1	25600	2350
107	0.1	92.1	0.4	99.6	0.3	6.8	75.9	2.5	101000	9300
108	0.2	79.9	1.5	98.2	0.4	16.4	89.9	1.1	104000	9550
109	0.1	96.2	0.6	99.6	0.3	3.1	47.2	1.0	533000	8940
110	0.2	91.5	0.6	99.3	<0.1	7.2	76.5	0.1	52300	4810
111	0.2	93.0	0.6	99.3	0.1	5.6	74.9	0.3	52000	4790
112	0.2	92.5	0.7	99.3	0.2	6.1	74.6	0.1	51500	4740

Example 2

These examples demonstrate the process of trimerizing ethylene to make 1-hexene and the separation steps necessary to produce the desired product purity.

Greater than 98.5% purity 1-hexene was produced in Runs 201-203 in the following manner. Ethylene and catalyst system were fed to a reactor in the presence of a diluent/solvent. The reactor effluent was stripped of ethylene in column 1. Subsequently, 1-hexene product was removed from the diluent/solvent, spent catalyst, and other heavier co-products in column 2. Finally, spent catalyst and other heavies were removed from the diluent/solvent in column 3. The diluent/solvent then was returned to the reactor.

The reactor was liquid full and had a volume of 10 gallons. Columns 1, 2, and 3 were packed towers. The diluent/solvent was methylcyclohexane. The reactor pressure used was 800 psig (5516 Kpa).

Run 201

The catalyst system was prepared in the same manner as described in Example 1.

To produce 1-hexene, ethylene and methylcyclohexane were fed to the reactor at a rate of 34.9 lbs/hr and 66.7 lbs/hr average, respectively. Hydrogen was added at an average rate of 3.4 standard cubic feet per hour. Catalyst was metered into the reactor at an average rate of 256 ml/hr. The reactor temperature was 244 F (118 C.).

At the conditions specified, 1-hexene product was removed from column 2 at an average rate of 24.9 lbs/hr. Product purity was 98.8 weight percent 1-hexene, with off-hexenes being the other major components. Overall, selectivity of ethylene to 1-hexene was 85.9 weight percent.

Run 202

Catalyst system was prepared in the same manner as described in Example 2.

Ethylene and methylcyclohexane were fed to the reactor at a rate of 49.9 lbs/hr and 118.8 lbs/hr average, respectively. Hydrogen was added at an average rate of 4.1 standard cubic feet per hour. Catalyst was metered into the

reactor at an average rate of 230 ml/hr. Reactor temperature was 247°F. (120°C.).

At the conditions specified, 1-hexene product was removed from column 2 at an average rate of 31.1 lbs/hr. Product purity was 99.1 weight percent 1-hexene, with off-hexenes being the other major components. Overall, selectivity of ethylene to 1-hexene was 92.1 weight percent.

Run 203

The catalyst system was prepared in the same manner as described in Example 1.

Ethylene and methylcyclohexane were fed to the reactor at a rate of 65.2 lbs/hr and 176.3 lbs/hr average, respectively. Hydrogen was added at an average rate of 6.4 standard cubic feet per hour. Catalyst was metered into the reactor at an average rate of 285 ml/hr. Reactor temperature was 264°F. (129°C.).

At the conditions specified, 1-hexene product was removed from column 2 at an average rate of 37.7 lbs/hr. Product purity was 99.3 weight percent 1-hexene, with off-hexenes being the other major components. Overall, selectivity of ethylene to 1-hexene was 94.4 weight percent.

Example 3

This example shows that coproducts of the trimerization reaction, which include decenes, can be hydrogenated and incorporated into commercially useful and available solvents, such as Soltrol® 100. Soltrol® 100 is a registered trademark of Phillips Petroleum Company and is a mix of C_9-C_{11} isoparaffins. One embodiment of such a hydrogenation process is shown in FIG. 6.

Catalyst activation and hydrotreatment were done in a downflow 2' X 3/4" OD fixed-bed reactor. The reactor was charged with 15 ml of 3 mm glass beads, 20 ml of commercially available Englehard Ni5254, lot HE 38 hydrogenation catalyst, and topped with Alcoa alumina A201. Heat control was accomplished in a 3-zone tube furnace. Catalyst activation was done at 343°C. with 300 cc/min of hydrogen (H_2, 99.9%) for three hours prior to hydrogenation of a decene isomer fraction of the trimerization reaction co-product.

A decene isomer fraction of the trimerization reaction co-product, was hydrotreated as it was feed to the reactor by a syringe pump. Hydrogen was provided to the top of the reactor through a calibrated mass flow controller at 100

cc/min. Total pressure of 400 psig to the system was maintained at the reactor exit by a Moore regulator. Samples were periodically analyzed for bromine number and analyzed by GC and UV.

Hydrotreatment proceeded smoothly with 100% reduction of the decene to decane isomers at 1 liquid hourly spaced velocity (LHSV), 150°C., 400 psig hydrogen. However, when the LHSV was raised to 3, 150°C. and 400 psig H_2, total decene isomer conversion dropped to 76%. Increasing the reactor temperature to 200°C. increased conversion to 83%. Complete decene isomer conversion resulted again when the 1 LHSV, 150°C., 400 psig H_2 conditions were used. As is normal for hydrotreating reactions, a heat rise was noted across the reactor which was LHSV dependent. At 1 LHSV, the heat rise was 35°C.; at 3 LHSV the heat rise was 47°C. Conversion results were confirmed by GC, GC/MS and bromine number analysis. The results of these hydrogenations are listed below in Table 3.

Table 3

Run	LHSV	Reactor Temp, °C	H_2 Pressure, psig	Heat Rise, °C	% Reduction, Decenes to Decanes
301	1	150	400	35	100
302	3	150	400	47	76
303	3	200	400	47	83
304	1	150	400	35	100

A commercially available Soltrol® 100 sample, that had been hydrotreated was used to prepare blends stocks with the above hydrotreated product. Blends of C_{10}/Soltrol® 100 were made in 2, 10, 20, 30 and 50 volume percent concentrations to evaluate the compatibility of these two products. GC analysis, using a column that separates according to boiling points, show that the decane isomers fit into the Soltrol® 100 boiling point range. The Soltrol® 100 purity was not reduced by the addition of the hydrotreated decene product.

While this invention has been described in detail for the purpose of illustration, it is not to be construed as limited thereby but is intended to cover all changes and modifications within the spirit and scope thereof.

CLAIMS

1. A process for the trimerization of olefins comprising reacting an olefin reactant in the presence of a catalyst system comprising a chromium source, a pyrrole-containing compound and a metal alkyl; wherein said reaction is carried out in a reactor having at least one inlet line and at least one outlet line, said catalyst system and said olefin reactant being supplied to the reactor through said at least one inlet line, and trimerization reaction products thus formed in the reactor being removed from said reactor through said at least one outlet line, and which includes passing said trimerization reaction products to at least one separator so as to separate desired trimerization reaction products from said trimerization reaction products.

2. A process in accordance with claim 1, which include passing said trimerization reaction products through one or more filters.

3. A process in accordance with claim 1, further comprising feeding a catalyst system deactivator through an inlet line following the reactor.

4. A process in accordance with claim 1, wherein olefin reactant is fed into said reactor through a separate inlet line.

5. A process in accordance with claim 1, wherein a stream of heavies is fed to at least one of the separators through an inlet line.

6. A process according to claim 5, wherein the stream of heavies is removed from one separator and passed to the inlet of a subsequent separator.

7. A process according to claim 1, wherein trimerization reaction solvent is fed into said reactor through a separate inlet line.

8. A process in accordance with claim 1, wherein said olefin reactant comprises olefin compounds having from about 2 to about 30 carbon atoms per molecule.

9. A process in accordance with claim 8, wherein said olefin reactant compound is ethylene.

10. A process in accordance with claim 1, wherein said desired trimerization reaction products comprise olefin compounds having from about 6 to 100 carbon atoms per molecule.

11. A process in accordance with claim 10, wherein said desired

trimerization reaction products comprise hexenes.

12. A process in accordance with claim 11, wherein said desired trimerization reaction products comprise 1-hexene.

13. A process according to any one of the preceding claims, carried out in a continuous manner.

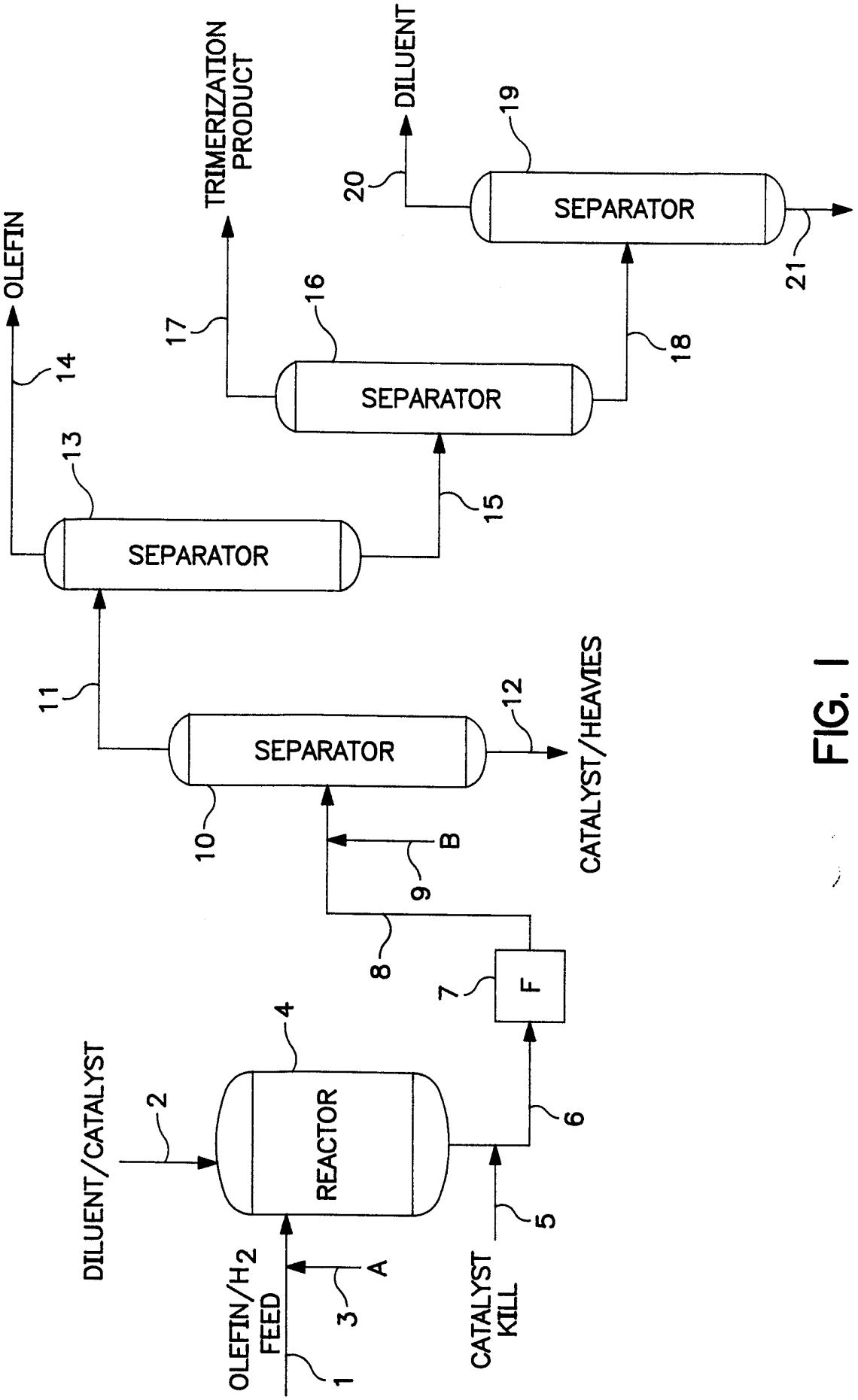
OLEFIN/H_2 FEED
1
3
A
DILUENT/CATALYST
2
REACTOR
4
CATALYST KILL
5
6
F
7
8
9
B
SEPARATOR
10
11
12
CATALYST/HEAVIES
SEPARATOR
13
14
OLEFIN
15
SEPARATOR
16
17
TRIMERIZATION PRODUCT
18
SEPARATOR
19
20
DILUENT
21

FIG. 1

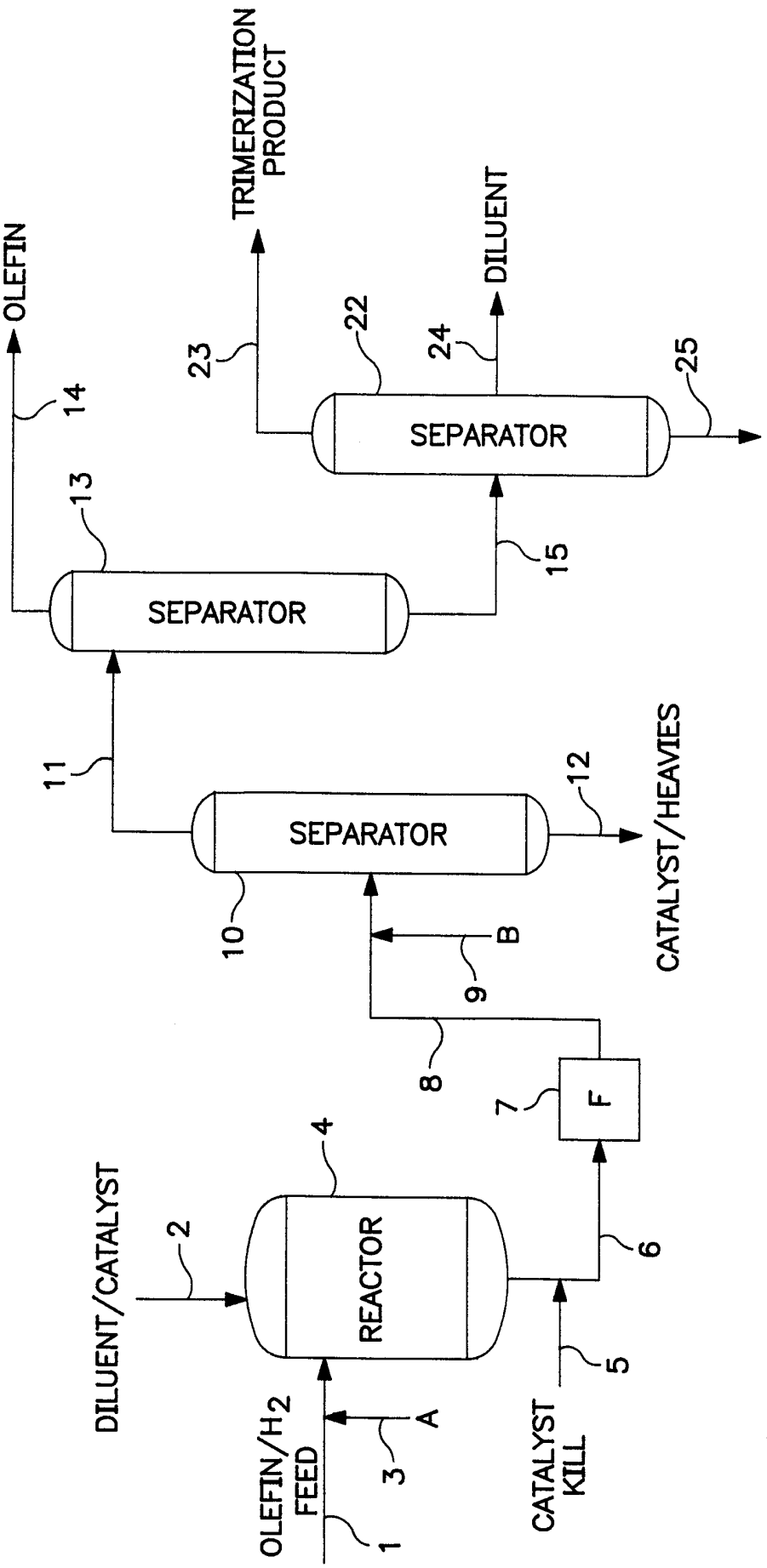
OLEFIN
14
13
SEPARATOR
11
TRIMERIZATION PRODUCT
23
22
DILUENT
24
SEPARATOR
25
15
SEPARATOR
12
CATALYST/HEAVIES
10
B
9
8
7
F
DILUENT/CATALYST
2
4
REACTOR
6
5
OLEFIN/H2 FEED
1
3
A
CATALYST KILL

FIG. 2

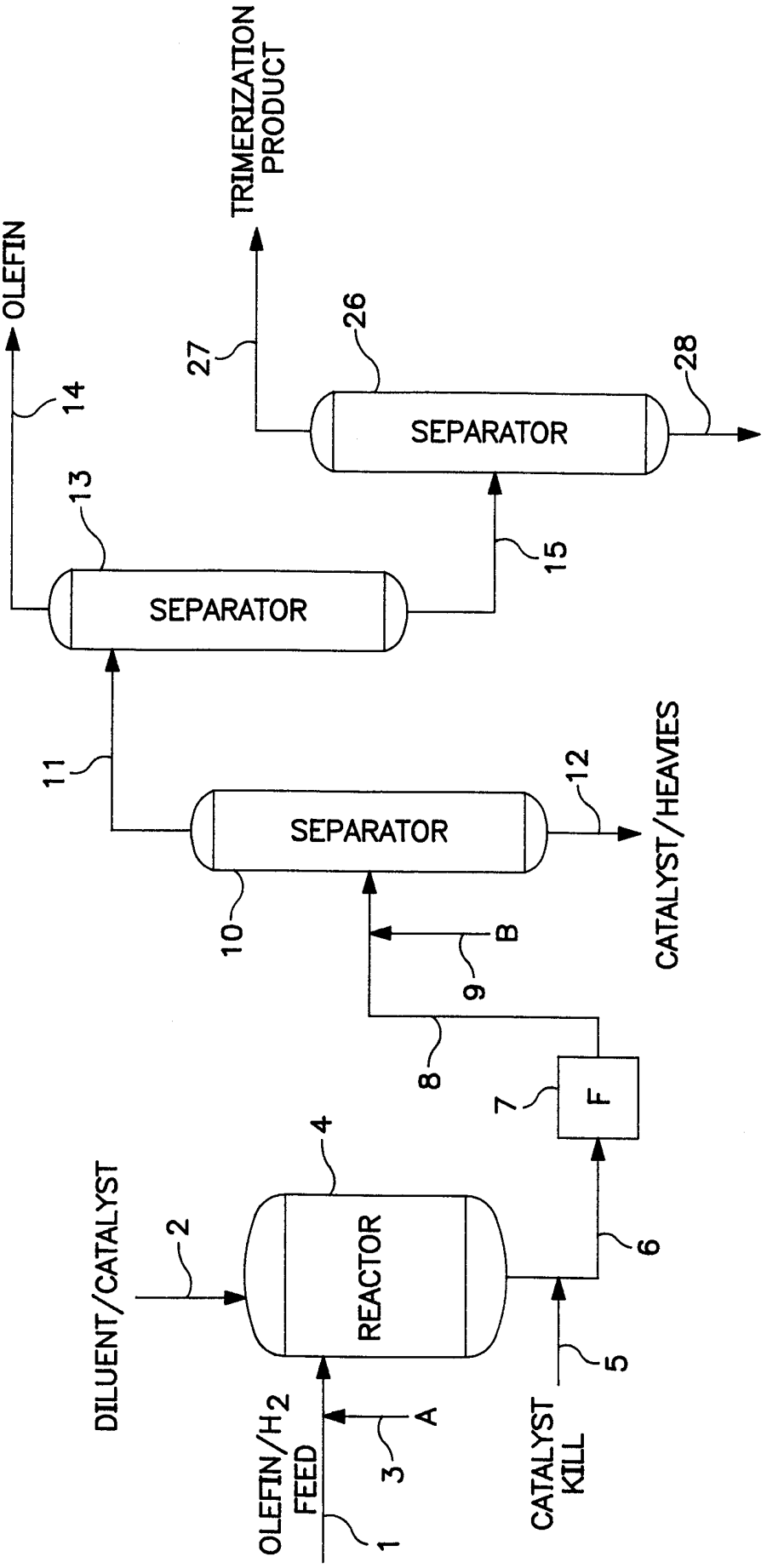
OLEFIN/H_2 FEED
1
3
A
DILUENT/CATALYST
2
REACTOR
4
CATALYST KILL
5
6
F
7
8
9
B
SEPARATOR
10
CATALYST/HEAVIES
12
11
SEPARATOR
13
OLEFIN
14
15
SEPARATOR
26
27
TRIMERIZATION PRODUCT
28

FIG. 3

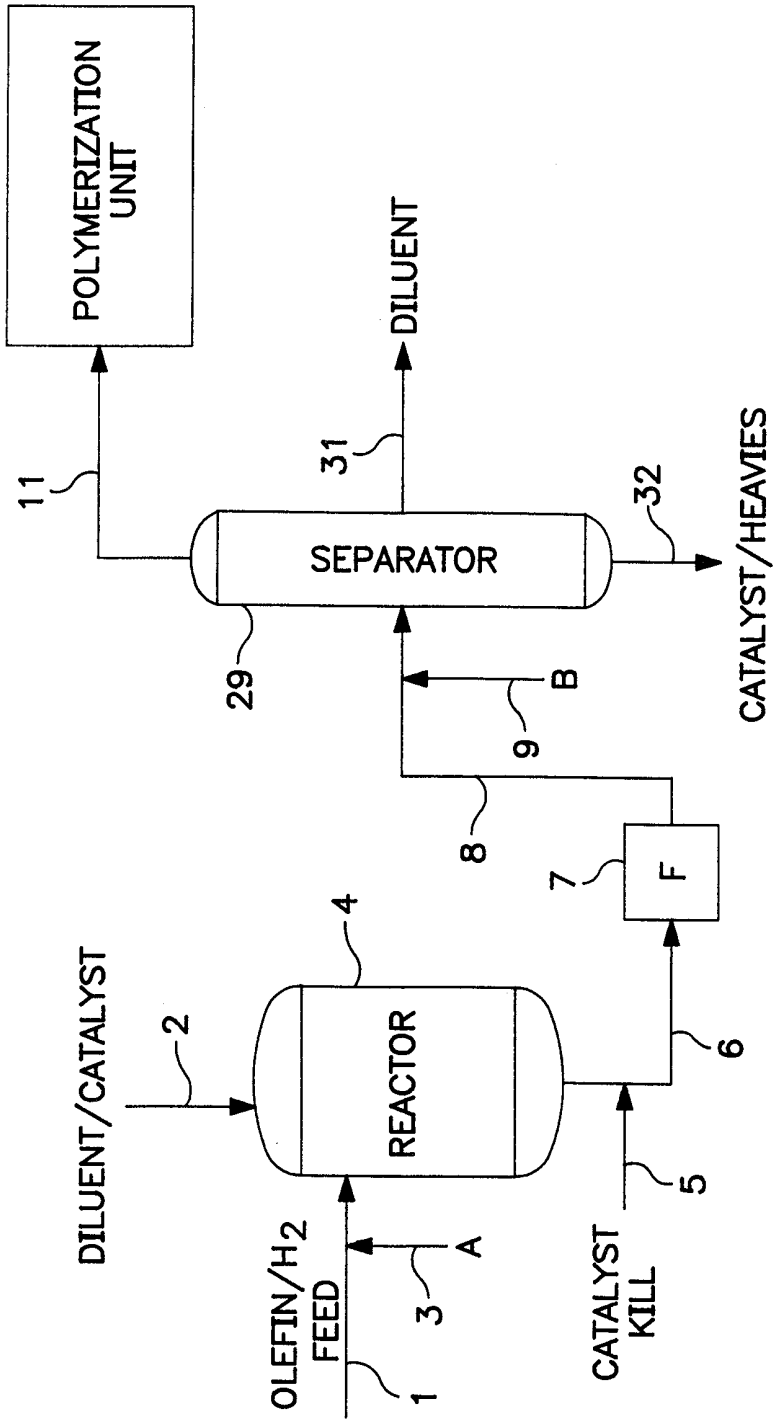
POLYMERIZATION UNIT
11
DILUENT
31
SEPARATOR
32
CATALYST/HEAVIES
29
B
9
8
7
F
4
DILUENT/CATALYST
2
REACTOR
6
5
OLEFIN/H2 FEED
A
3
1
CATALYST KILL

FIG. 4

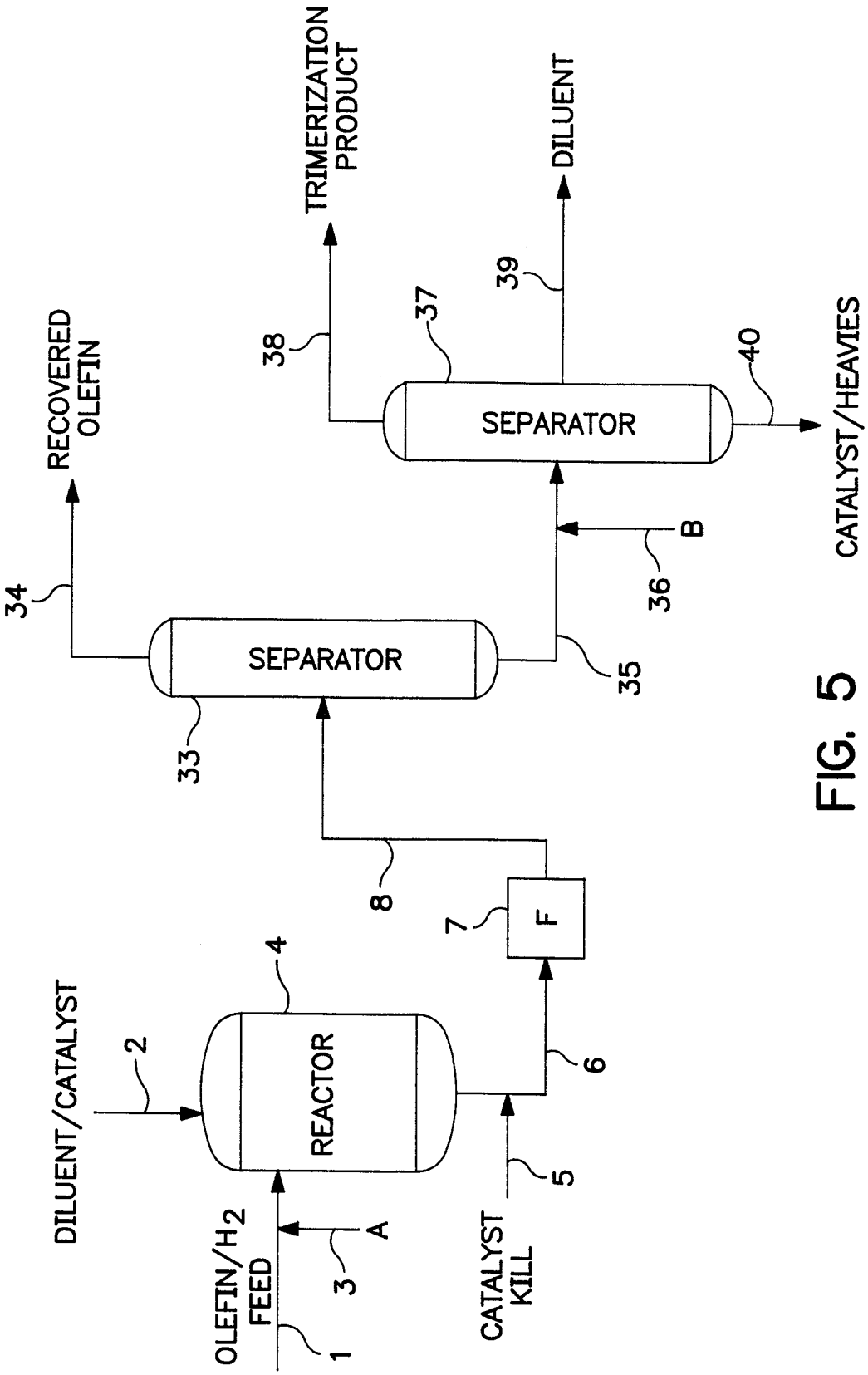
DILUENT/CATALYST
2
OLEFIN/H2
FEED
1
3
A
REACTOR
4
CATALYST
KILL
5
6
F
7
8
SEPARATOR
33
34
RECOVERED
OLEFIN
35
36
B
SEPARATOR
37
38
TRIMERIZATION
PRODUCT
39
DILUENT
40
CATALYST/HEAVIES

FIG. 5

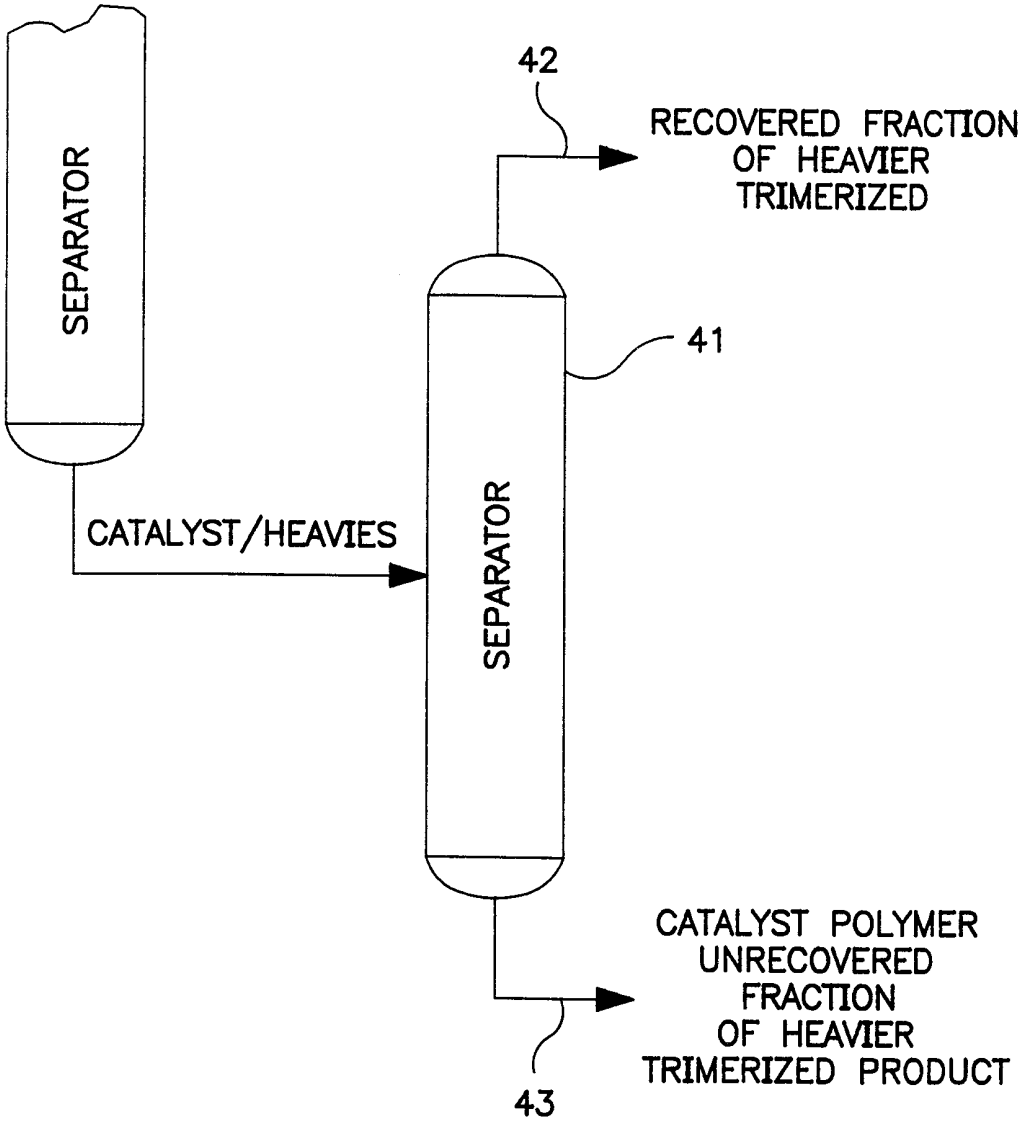
SEPARATOR
42
RECOVERED FRACTION OF HEAVIER TRIMERIZED
41
CATALYST/HEAVIES
SEPARATOR
CATALYST POLYMER UNRECOVERED FRACTION OF HEAVIER TRIMERIZED PRODUCT
43

FIG. 6

INTERNATIONAL SEARCH REPORT

Interi ıal Application No
PCT/US 98/14799

A. CLASSIFICATION OF SUBJECT MATTER
IPC 6 C07C2/30

According to International Patent Classification (IPC) or to both national classification and IPC

B. FIELDS SEARCHED

Minimum documentation searched (classification system followed by classification symbols)
IPC 6 C07C

Documentation searched other than minimum documentation to the extent that such documents are included in the fields searched

Electronic data base consulted during the international search (name of data base and, where practical, search terms used)

C. DOCUMENTS CONSIDERED TO BE RELEVANT

Category °	Citation of document, with indication, where appropriate, of the relevant passages	Relevant to claim No.
X	GB 2 271 116 A (MITSUBISHI KASEI CORPORATION) 6 April 1994 see page 18, line 17 - line 21 see claims ---	1-13
X	EP 0 780 353 A (PHILLIPS PETROLEUM CO) 25 June 1997 see claims -----	1-13

☐ Further documents are listed in the continuation of box C.

☒ Patent family members are listed in annex.

° Special categories of cited documents :

"A" document defining the general state of the art which is not considered to be of particular relevance

"E" earlier document but published on or after the international filing date

"L" document which may throw doubts on priority claim(s) or which is cited to establish the publication date of another citation or other special reason (as specified)

"O" document referring to an oral disclosure, use, exhibition or other means

"P" document published prior to the international filing date but later than the priority date claimed

"T" later document published after the international filing date or priority date and not in conflict with the application but cited to understand the principle or theory underlying the invention

"X" document of particular relevance; the claimed invention cannot be considered novel or cannot be considered to involve an inventive step when the document is taken alone

"Y" document of particular relevance; the claimed invention cannot be considered to involve an inventive step when the document is combined with one or more other such documents, such combination being obvious to a person skilled in the art.

"&" document member of the same patent family

Date of the actual completion of the international search	Date of mailing of the international search report
21 September 1998	14/10/1998

Name and mailing address of the ISA	Authorized officer
European Patent Office, P.B. 5818 Patentlaan 2 NL - 2280 HV Rijswijk Tel. (+31-70) 340-2040, Tx. 31 651 epo nl, Fax: (+31-70) 340-3016	Van Geyt, J

INTERNATIONAL SEARCH REPORT

Information on patent family members

International Application No
PCT/US 98/14799

Patent document cited in search report	Publication date	Patent family member(s)	Publication date
GB 2271116 A	06-04-1994	JP 6145241 A	24-05-1994
		JP 6157654 A	07-06-1994
		JP 6157655 A	07-06-1994
		GB 2298864 A,B	18-09-1996
		NL 9301583 A	18-04-1994
		US 5491272 A	13-02-1996
		US 5557026 A	17-09-1996
EP 0780353 A	25-06-1997	AU 691767 B	21-05-1998
		AU 7423996 A	07-08-1997
		CA 2189589 A	19-06-1997
		CZ 9603707 A	13-05-1998
		HU 9603503 A	28-10-1997
		JP 9183984 A	15-07-1997
		NO 965430 A	19-06-1997
		PL 317523 A	23-06-1997
		SK 161896 A	06-08-1997