R. S. JENSEN.

METAL ORCHARD BOX.

APPLICATION FILED OCT. 5, 1916.

1,233,243. Patented July 10, 1917.

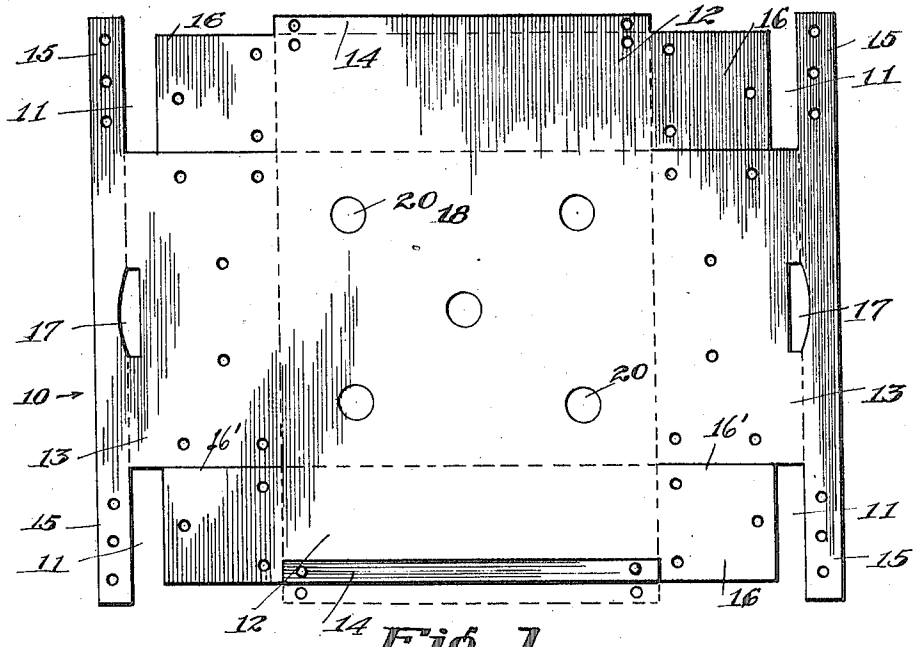

Fig. 1.

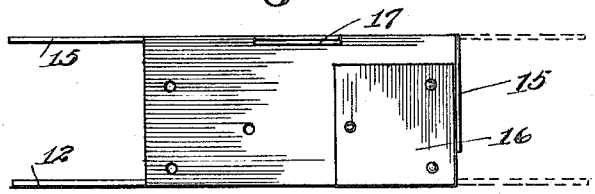

Fig. 2.

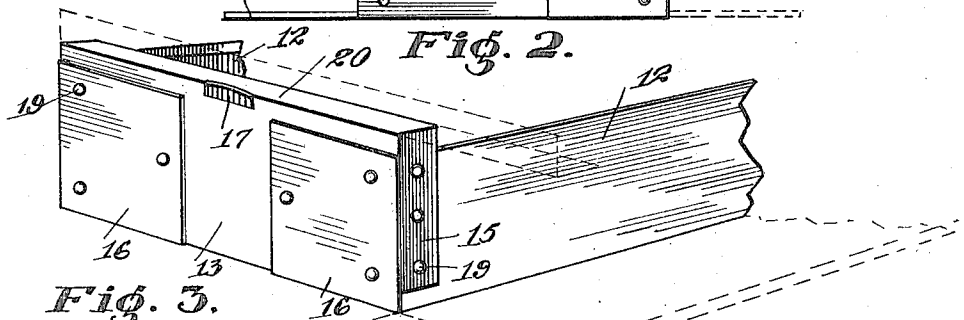

Fig. 3.

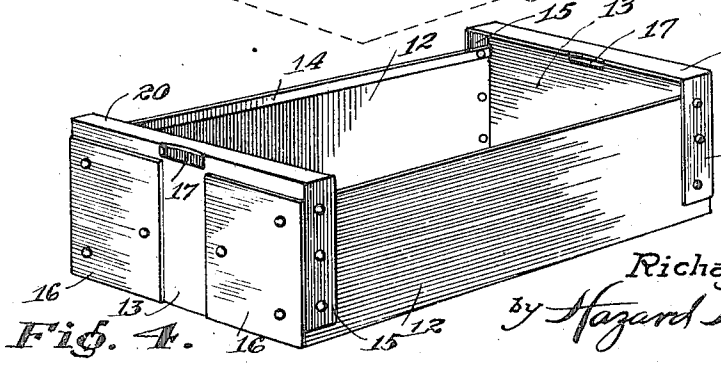

Fig. 4.

INVENTOR

Richard S. Jensen

by Hazard Berry & Miller

ATTYS.

UNITED STATES PATENT OFFICE.

RICHARD S. JENSEN, OF LOS ANGELES, CALIFORNIA.

METAL ORCHARD-BOX.

1,233,243. Specification of Letters Patent. Patented July 10, 1917.

Application filed October 5, 1916. Serial No. 123,839.

To all whom it may concern:

Be it known that I, RICHARD S. JENSEN, a citizen of the United States, residing at Los Angeles, in the county of Los Angeles and State of California, have invented new and useful Improvements in Metal Orchard-Boxes, of which the following is a specification.

My invention relates to a metal orchard box.

The ordinary orchard box, commonly in use is a rectangular wooden box, open at the top, whose short ends are provided with grip holes near the upper edges, whereby the box may be carried.

These wooden boxes are often broken by rough handling and need to be repaired, thereby increasing their cost of upkeep.

It is an object of my invention to construct a metal orchard box which is exceedingly simple of construction, inexpensive of manufacture, and durable. In addition to the lighter weight, it has the advantage of being more sanitary, of being easily kept clean, and of being stored at low cost on account of its fire proof qualities.

With the above and other objects in view which will appear as the description proceeds, my invention consists in the construction and arrangement of parts of the metal box, as hereinafter described and claimed.

In the accompanying drawings which form a part of this specification, I have illustrated a convenient and practical embodiment of my invention, and in which:

Figure 1 is a plan view of a metal blank showing the manner in which it is stamped out, preparatory to being folded and assembled to form the metal box.

Fig. 2 is an end view of the metal box showing the manner in which the end portions are bent and assembled.

Fig. 3 is a perspective view showing the short side of the box and the manner in which the metal blank is bent and assembled to form the same.

Fig. 4 is a perspective view of the assembled metal box.

A rectangular sheet metal blank 10, the metal being preferably steel, is cut out so as to form four rectangular slots 11, there being one at each corner of the blank. The slots 11 extend from the long sides 12 at right angles thereto, and are spaced a slight distance from the short sides 13 of the blank. Four rectangular strips are cut from the long sides 12 of the blank, each strip being cut from the inner side of each of the slots 11 toward the middle of the long side 12, thereby forming a pair of narrow rectangular longitudinal flanges 14, laterally extending from the long sides 12. The ends of these flanges 14 are equidistantly spaced from the short sides of the blank. The slots 11, cut as described form rectangular strips or reinforcing members 15 at opposite ends of each short side 13, as shown. Beginning with the inner end of each of the slots 11, a slit 16′ is cut, which slit runs parallel to the long sides of the blank. As clearly shown in Fig. 1, the slit 16′ and the inner side of the slot 11 and the outer side of the portion of the long side, which extends between the slot 11 and the flanges 14 are of equal length and form a square reinforcing plate 16. A pair of grip or hand holes 17 are stamped out in the blank at points spaced from the short ends 13 and equi-distant from the long sides 12.

The metal blank stamped out as just described is now ready for folding. The long sides 12 of the blank are bent at right angles from the main body portion, the line of bending being along the slits 16′. The short sides are now bent vertically upward from the main body portion on a line connecting the inner ends of the slits 16′, thereby forming a rectangular bottom 18. The square reinforcing plates 16 are now bent at right angles to the upstanding sides 12 and lie flat and parallel on the outer faces of the end walls 13. The upper portions of the end walls 13 are bent inwardly at right angles to said end walls, the width of the reinforcing strips 15. The reinforcing strips are then bent vertically downward and lie flat and parallel on the outer faces of the side walls 12. The lateral flanges 14 of the side walls 12 are bent upon said side walls and lie flat and parallel along the upper inner faces thereof, forming reinforcing strips for the side walls 12.

Prior to the folding operations, the sheet metal blank is provided with a suitable number of ventilating holes 20 in the bottom 18 of the box; also a suitable number of rivet holes are provided between the reinforcing plates 16, the end and side walls and the reinforcing strips 15, in such a manner that appropriate rivet holes will register, whereby

the folded portions of the box may be securely riveted together by rivets 19. However, it is not necessary to use the rivets in conjunction with rivet holes, as in place of the rivets and rivet holes, the reinforcing plates 16 and reinforcing strips 15 may be welded to the end and side walls, respectively.

The position of the hand holes 17, when the box is assembled, is such that the upper edges are either flush with the horizontal reinforcing strips 20, or have their upper edges lying in the plane of said strips.

It should be noted that the box constructed according to this invention has double reinforcing members at the ends consisting of the square plates 16 and the strips 15, whose edges are joined, forming a double joint with the joint of the end and side walls of the box. Furthermore, the upper edge of the side wall 12 is reinforced and presents a smooth surface not liable to injure the hand.

It will thus be seen that I have constructed an exceedingly simple, strong and fire proof box, which is formed out of one metal blank, and which is easily stamped out and assembled, and which on account of the raised end walls, prevents crushing of the fruit.

While I have shown the preferred form of the box, it will be understood that details of construction may be changed by those skilled in the art without departing from the spirit of my invention as claimed.

I claim:

1. A metal orchard box formed from a single metal blank, said box having a rectangular bottom and rectangular side and end walls, with reinforcing plates integral with said side walls lying flat and parallel on the outer faces of said end walls, the upper ends of the end walls being provided with an inwardly extending flange, whose outer ends have integrally formed therewith, reinforcing strips lying flat and parallel on the outer faces of the side walls, each end wall being provided immediately below said flange with an aperture constituting a hand grip, the upper edges of the side walls having a reinforcing strip formed integral therewith and doubled upon said edges, and rivets fastening said reinforcing plates and reinforcing strips through the end walls and the side walls, respectively.

2. A metal orchard box formed from a single metal blank, said box having a rectangular bottom and rectangular side and end walls with reinforcing plates integral with said side walls, lying flat and parallel on the said end walls, the ends of said side walls being reinforced with vertical plates integral with said end walls; the upper ends of said end walls projecting above said side walls and being provided with apertures constituting hand grips, and means fastening said reinforcing plates to the walls.

3. A metal orchard box formed from a single metal blank, said box having a rectangular bottom and rectangular side and end walls, reinforcing plates integral with said side walls lying flat and parallel on said end walls, said end walls projecting above said side walls and having their top portions bent inwardly at right angles to said end walls, the lateral ends of said top portions being connected to vertical reinforcing plates lying flat and parallel along the ends of said side walls, said end walls being provided with apertures constituting hand grips, said reinforcing plates being securely attached to said walls.

In testimony whereof I have signed my name to this specification.

RICHARD S. JENSEN.

Copies of this patent may be obtained for five cents each, by addressing the "Commissioner of Patents, Washington, D. C."