G. B. KOHLER.

FARE BOX.

APPLICATION FILED OCT. 5, 1910.

1,068,784.

Patented July 29, 1913.

3 SHEETS—SHEET 1.

Fig. 1.

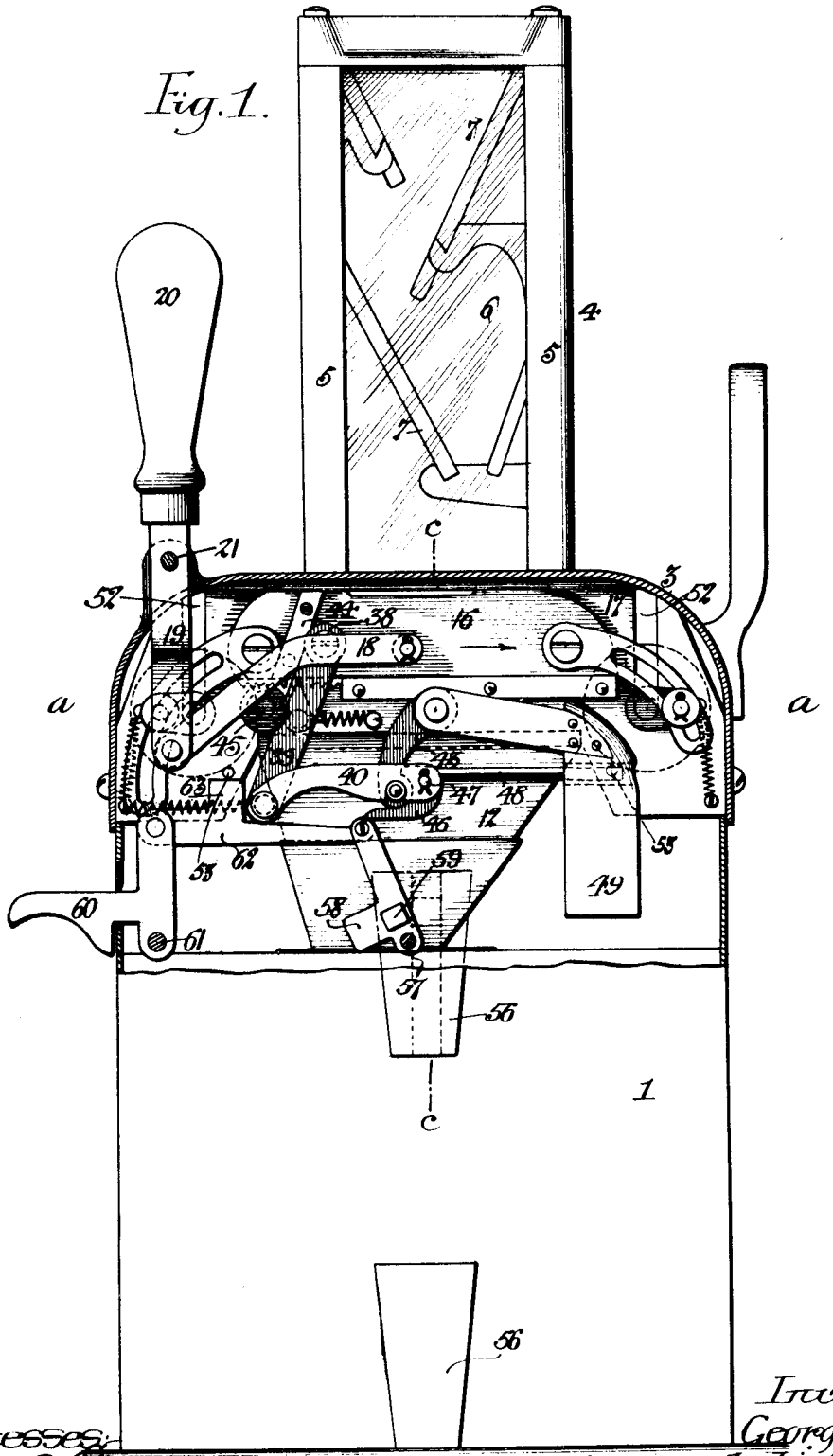

Witnesses:
Titus K. Brown.
Walter Chism

Inventor:
George B. Kohler
by his Attorneys
Howson & Howson
Henry Howson

G. B. KOHLER.

FARE BOX.

APPLICATION FILED OCT. 5, 1910.

1,068,784.

Patented July 29, 1913.

3 SHEETS—SHEET 2.

Fig. 2.

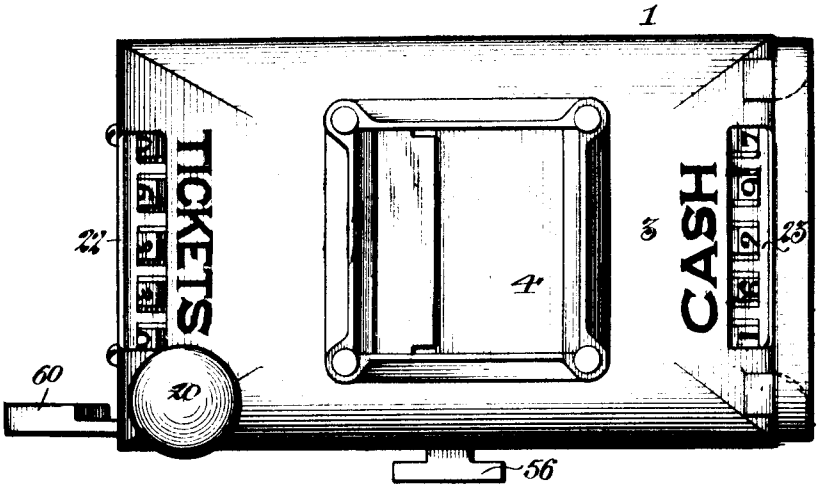

Fig. 3.

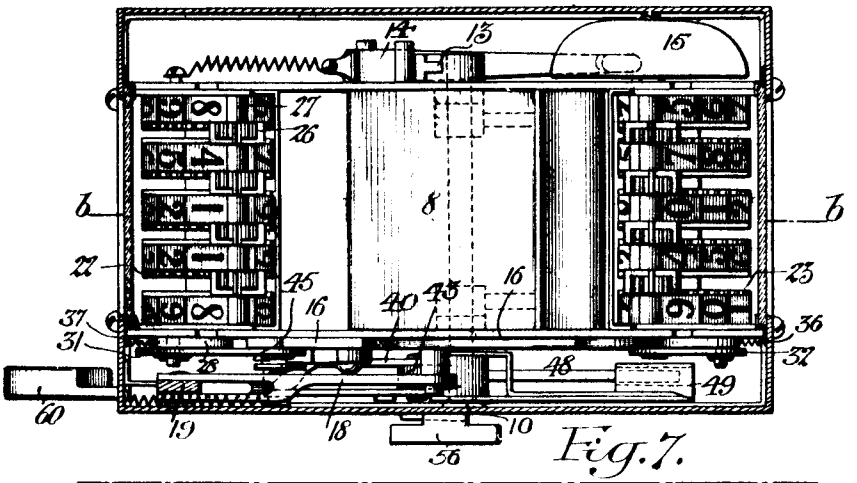

Fig. 7.

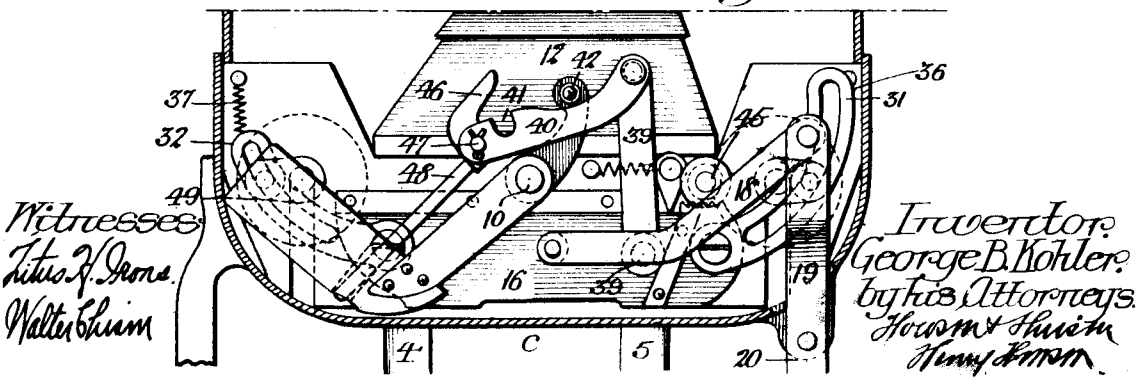

Witnesses:
Titus H. Irons.
Walter Thum

Inventor:
George B. Kohler.
by his Attorneys.
Howson & Howson
Henry Howson

G. B. KOHLER.

FARE BOX.

APPLICATION FILED OCT. 5, 1910.

1,068,784.

Patented July 29, 1913.

3 SHEETS—SHEET 3.

Fig. 5.

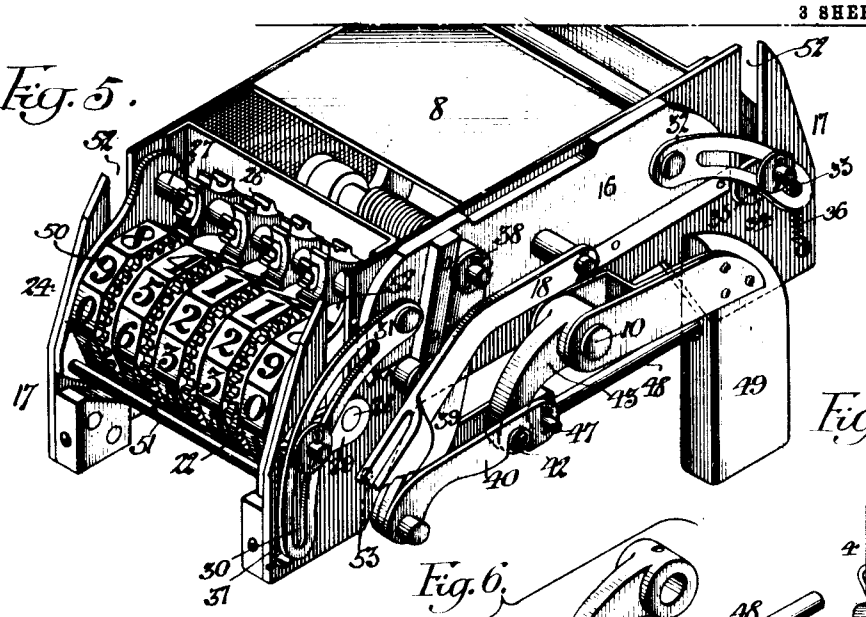

Fig. 9.

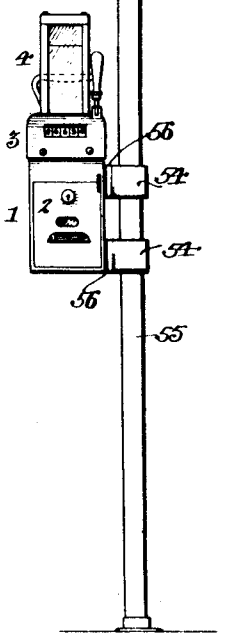

Fig. 6.

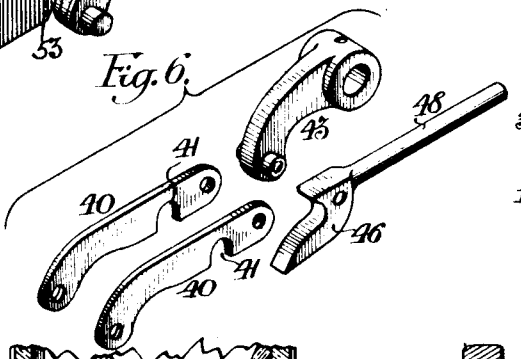

Fig. 8.

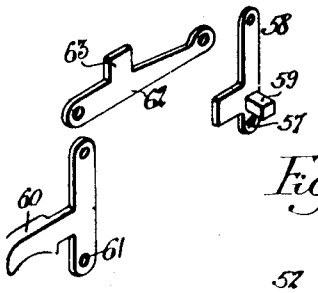

Fig. 4.

Witnesses:
Titus N. Crowe.
Walter Chinn

Inventor:
George B. Kohler
by his Attorneys
Howson & Howson
Henry Howson

UNITED STATES PATENT OFFICE.

GEORGE B. KOHLER, OF PHILADELPHIA, PENNSYLVANIA, ASSIGNOR TO THE J. G. BRILL COMPANY, OF PHILADELPHIA, PENNSYLVANIA, A CORPORATION OF PENNSYLVANIA.

FARE-BOX.

1,068,784. Specification of Letters Patent. Patented July 29, 1913.

Application filed October 5, 1910. Serial No. 585,470.

To all whom it may concern:

Be it known that I, GEORGE B. KOHLER, a citizen of the United States, residing in Philadelphia, Pennsylvania, have invented certain Improvements in Fare-Boxes, of which the following is a specification.

My invention relates to certain improvements in fare boxes used particularly on passenger cars or on platforms leading to passenger cars.

One object of my invention is to so construct the fare box that it will register both the cash and tickets, separately.

A further object of the invention is to provide means for locking the fare box to the standard or other permanent fixture to which it is attached.

A still further object is to construct the mechanism of the box in a manner which will be simple and yet effective.

In the accompanying drawings: Figure 1, is a side view, partly in section, illustrating my improved fare box; Fig. 2, is a plan view; Fig. 3, is a sectional plan view on the line *a*—*a*, Fig. 1; Fig. 4, is a sectional view on the line *b*—*b*, Fig. 3; Fig. 5, is a perspective view illustrating the operating mechanism; Fig. 6, is a detached perspective view illustrating details of part of the mechanism shown in Fig. 5; Fig. 7, is a sectional view showing part of the box inverted; Fig. 8, is a detached perspective view showing in detail the mechanism for locking the box to its support; and Fig. 9, is a view showing the box mounted on a fixed support.

1 is the body of the box and in the bottom of this body portion is a drawer 2 which is locked when closed.

3 is the hood of the box forming the top of the body 1 and inclosing the registering mechanism.

4 is the fare receiving section of the box having posts 5 at the corners and glazed sides 6. Within this fare receiving section are inclined deflectors 7, over which the cash or tickets must pass to the platform 8. The platform 8 is pivoted to a carrier 9 which is mounted on a shaft 10. A link 11 connects the platform 8 with an arm on the shaft 10, so that as the shaft is turned the platform will move forward and tip, discharging the coins or tickets into the chute 12 leading to the fare drawer 2 in the bottom of the box. On the shaft 10 is an arm 13 which contacts with a pivoted clapper 14, which contacts in turn with a bell 15, as clearly shown in Fig. 3. A slide 16 is mounted on the frame 17, and this slide is connected by a link 18 to one arm 19 of a hand lever 20 pivoted at 21 to the casing 3, so that on moving the hand lever 20 in either direction the slide will be reciprocated. It will be understood that when the hand lever is moved in one direction the mechanism is so arranged that it will actuate the ticket register, while when moved in the opposite direction it will operate the cash register.

22 is the ticket register and 23 is the cash register. The ticket register has a series of numbered disks 24 between which are gears 25 meshing with pinions 26 on a shaft 27. Each of the first four disks are notched at one side of the numbers and every third tooth of each pinion 26 is extended so as to enter the notch, so that when the first disk makes a complete revolution the second disk will be moved a sufficient distance to bring another figure into view, and so on throughout the series. I lay no claim to this particular construction of register in this application.

On the end of the shaft 28 of the registering mechanism 22 is an arm 29 having a pin which extends into a slot 30 of a curved arm 31 pivoted to the slide 16. Pivoted to the opposite end of the slide 16 is an arm 32 having a slot 33 into which extends a pin on an arm 34 of the shaft 35 of the registering mechanism 23. When the slide 16 is moved in the direction of the arrow, Fig. 1, it will cause the arms 31 and 32 to slide over the pins of the registering mechanisms, and before the slide moves to its full extent the pin is at one end of the arm 31, and on continued movement of the slide 16 the arm 31 will turn the shaft 28 a sufficient distance to bring a figure in line with the opening in the casing 3, thus registering a ticket. This will not affect the registering mechanism 23. When the slide 16 is moved in the opposite direction to that indicated by the arrow, it will not actuate the registering mechanism 22 but will actuate the registering mechanism 23, indicating cash. As soon as the

arms 28 and 34 are released, springs 36 and 37 bring their respective arms back to their normal positions.

Pivoted at 38 to the slide 16 is an arm 39 which is pivoted in turn to a pair of links 40. These links are notched at 41 and resting in the notches are pins 42 on an arm 43 secured to the shaft 10, so that on movement of the slide the shaft 10 will be actuated. In order that the shaft will be actuated in one direction no matter in which way the slide is moved, I form a stop 44 on the slide 16 which prevents the movement of the arm 39 independently of the slide when the slide is moved in the direction of the arrow, Fig. 1, so that on the movement of the slide in the direction of the arrow the arm 43 will be pushed so as to turn the shaft 10 and tip the plate 8.

When the slide is moved in the direction opposite to that indicated by the arrow, then the arm 39 becomes a lever and a projection 45 on the frame acts as a fulcrum for the lever, and while the upper end of the arm 39 is moving in one direction the lower end of the arm is moving in the opposite direction and will cause the arm 43 and the shaft 10 to move in the same direction as when the slide was moving in the direction originally indicated, so that no matter in what direction the slide is moved the platform 8 on which the coins or tickets are deposited will be tipped so as to discharge the fare into the receptacle within the box.

The pin 42 is held in its normal position in the notches 41 of the links 40 by a block 46 which is shaped, as clearly shown in Fig. 6, to engage the rounded end of the arm 43. This block is connected to the outer ends of the links 40 by a pivot pin 47 and has a stem 48 which extends into an opening in a weight 49 pivoted on the shaft 10. The weight is sufficient to hold the parts in contact when the fare box is in its normal position, but should the fare box be inverted, the weight will drop, causing the block to draw away from the end of the arm 43, and the links will also fall away from their pins 42, so that any movement of the hand lever 20 will not operate the platform 8. This construction is clearly illustrated in Fig. 7, which shows a portion of the box in the inverted position.

It will be noticed that the frame 17, which carries the mechanism, is detachably mounted in the hood 3 of the casing, and by simply removing the screw bolts the frame can be detached as illustrated in the perspective view, Fig. 5, and in order to readily remove the registering mechanism I mount the several gears and disks on a frame consisting of end plates 50, cross bars 51, and the several shafts supporting the gearing. The main shaft extends beyond the end plates and is adapted to the slots 52 in the side members of the frame 17, and the sub-frame is held to the main frame 17 by screws 53, so that on removing the screws the sub-frame carrying the registering mechanism can be detached when examination or repairs are necessary.

The fare box is detachably mounted on a rail, post or other part of the car structure, and when removed the box and bolt is manipulated so as to allow the box to be detached from its support. In the present instance, as illustrated in Fig. 9, two sockets 54 are mounted on a post 55 and on the box are two undercut beveled projections 56, Figs. 1 and 2, which fit in the sockets 54. Pivoted at 57 to the interior of the box is a bolt 58 having a projecting portion 59 which enters a notch in one of the sockets 54. On turning the bolt on its pivot 57 it is withdrawn from the notch and the box can be removed from the sockets. The bolt is actuated by a lever 60 projecting through an opening in the box; the lever being pivoted at 61 to the casing and connected to the bolt 58 by a link 62, so that when it is necessary to detach the box the lever 60 is raised, which will throw the bolt clear of the socket.

In order to prevent the accumulation of fares on the platform 8, prior to the removal of the box from its supports, I provide the link 62 with a projection 63 which contacts with the end of the lever 39 which actuates the platform 8 so as to discharge any fares remaining on the platform prior to the removal of the box from its supports. By this means it will be impossible for a person willfully to collect fares in the bottom of the receiving section, then detach the box and invert it so as to remove the cash or tickets. The lever 60 can also be used by the conductor to tilt the platform 8 without operating the registering mechanism, should a ticket not pass through the opening on the first tilting of the platform by the lever 20.

By the above construction it will be seen that the improved fare box will register, separately, the tickets and the cash fares. By simply moving the registering lever in one direction when the cash fares are inserted in the box one register will be actuated, and when tickets are inserted in the box the lever is moved in the opposite direction, actuating the registering mechanism for the tickets. Both the tickets and the cash in the present instance are discharged into the same receptacle, but they can be readily separated when the box is opened, and the ticket register should agree with the number of tickets in the box and the cash register should agree with the amount of cash.

The fare box cannot be removed from its support without first discharging the contents of the fare receiving section, so that anyone maliciously inclined could not re-

move the fares by manipulating the box when inverted. Furthermore, the mechanism for operating the platform 8 is automatically thrown out of operative position when the box is inverted.

I claim:—

1. The combination in a fare box, of two registering mechanisms; and a single operating lever therefor.

2. The combination in a fare box, of a discharge device for fares; two registering mechanisms; a single operating lever; means connecting the operating lever with the discharge device so that it will operate said discharge device when moved in either direction; and means connecting the lever with the two registering mechanisms so that one registering mechanism will be operated when the lever is moved in one direction and the other registering mechanism will be operated when the lever is moved in the opposite direction.

3. The combination in a fare box, of two registering mechanisms; and a single operating lever connected to both registering mechanisms, one mechanism being operated when the lever is moved in one direction and the other mechanism being operated when the lever is moved in the opposite direction.

4. The combination in a fare box, of a slide; an actuating lever for reciprocating said slide; two registering mechanisms; and means connecting the slide with both registering mechanisms so that when the slide is moved in one direction, one registering mechanism will be operated and when moved in the opposite direction the other registering mechanism will be operated.

5. The combination in a fare box, of a slide; an operating lever connected to the slide; two registering mechanisms, one operated when the slide is moved in one direction and the other operated when the slide is moved in the opposite direction; and connections between the slide and the discharge means, whereby the discharge means will be actuated when the slide is moved in either direction.

6. The combination of a hand lever; a slide; two registering mechanisms, each registering mechanism consisting of a series of rotatable disks; a crank arm on a shaft of each mechanism; slotted arms pivoted to the slide; pins on the crank arms extending through the slots in the arms so that as the hand lever is moved in one direction one register will be actuated and when the hand lever is moved in the opposite direction the other register will be operated.

7. The combination in a fare box, of a casing; a detachable frame mounted therein; registering mechanism carried by the said frame; a slide, also carried by the frame and connected to the mechanism, the frame being so arranged that all of the operating mechanism for the registers can be removed with the frame.

8. The combination in a fare box, of a discharge device for the fares; two registering mechanisms; a hand lever for simultaneously operating one of said registers and the discharge device; with a separate lever for actuating the discharge device without operating the registers.

In testimony whereof, I have signed my name to this specification, in the presence of two subscribing witnesses.

GEORGE B. KOHLER.

Witnesses:
WM. E. SHUPE,
WM. A. BARR.