Mar. 13, 1923. 1,448,572

L. POLINKOWSKY

TELEPHONE SYSTEM

Filed Apr. 29, 1920 2 sheets-sheet 1

Fig. 1

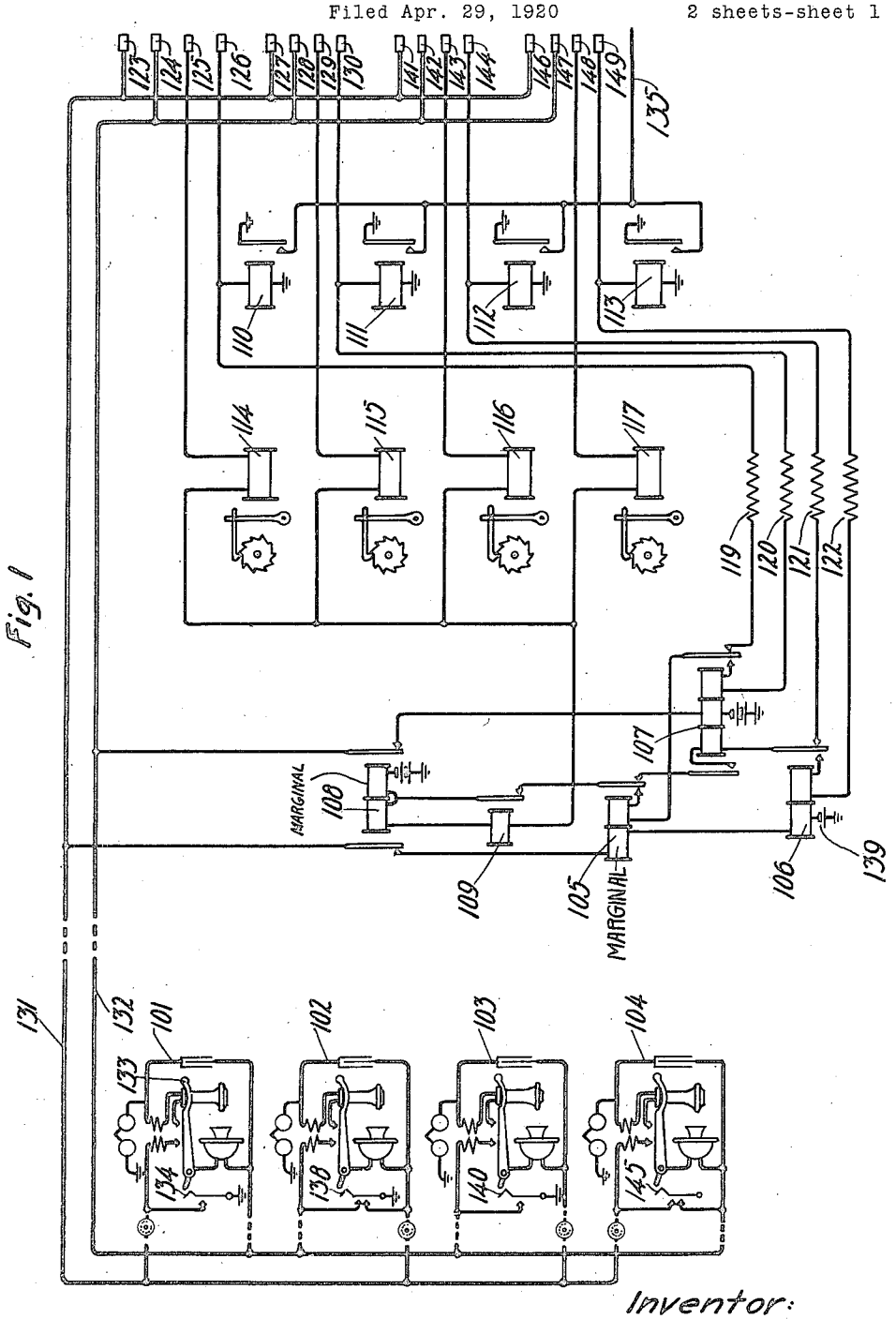

Inventor:
Lipa Polinkowsky.
by C. F. Soper Atty.

Mar. 13, 1923. 1,448,572

L. POLINKOWSKY

TELEPHONE SYSTEM

Filed Apr. 29, 1920 2 sheets-sheet 2

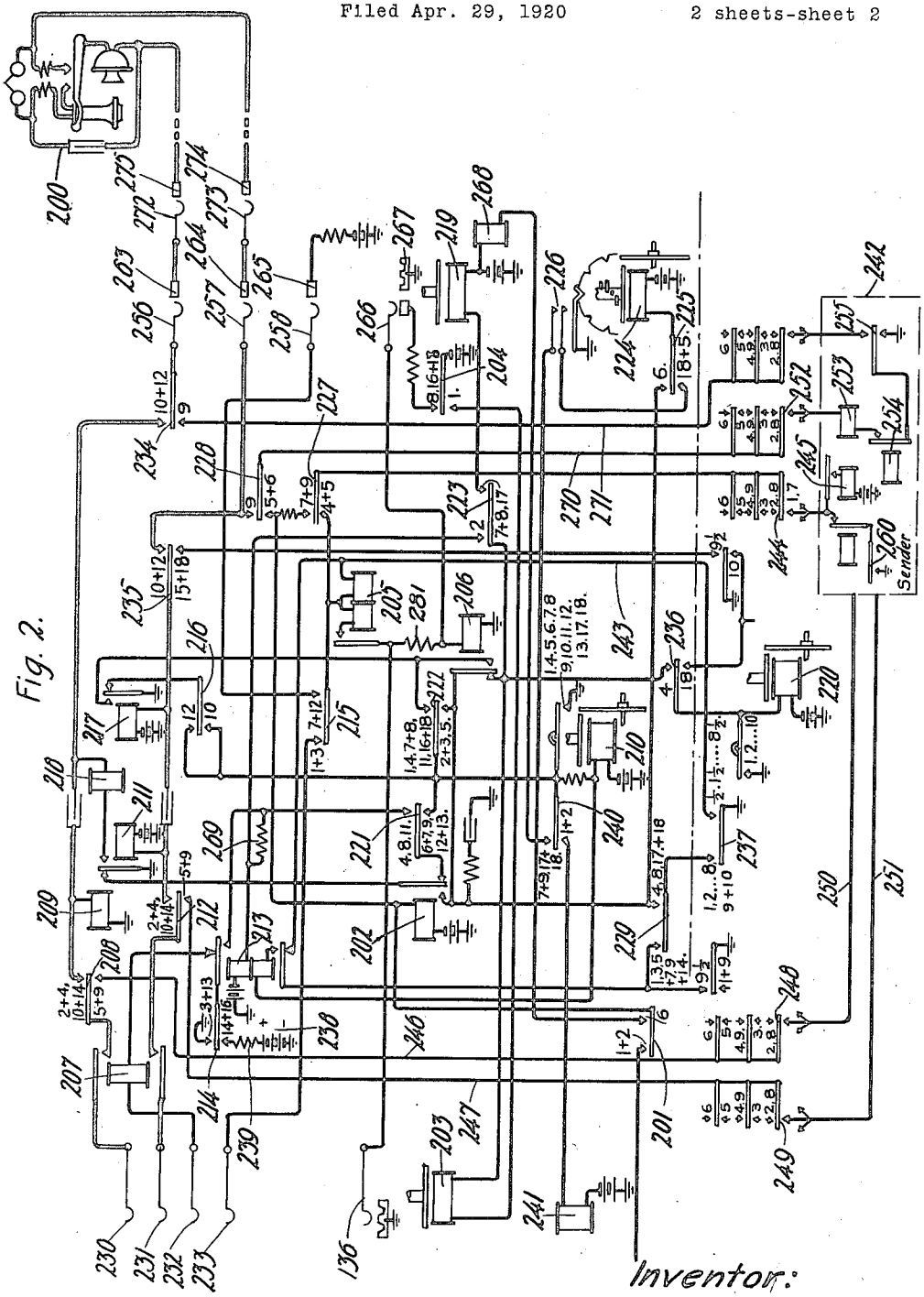

Fig. 2.

Inventor:
Lipa Polinkowsky.

by C. P. Sofer Att'y.

Patented Mar. 13, 1923. 1,448,572

UNITED STATES PATENT OFFICE.

LIPA POLINKOWSKY, OF ANTWERP, BELGIUM, ASSIGNOR TO WESTERN ELECTRIC COMPANY, INCORPORATED, OF NEW YORK, N. Y., A CORPORATION OF NEW YORK.

TELEPHONE SYSTEM.

Application filed April 29, 1920. Serial No. 377,708.

To all whom it may concern:

Be it known that I, LIPA POLINKOWSKY, a citizen of Russia, residing at Antwerp, Belgium, have invented certain new and useful Improvements in Telephone Systems, of which the following is a full, clear, concise, and exact description.

This invention relates to telephone systems and in particular to systems of the type in which machine switching apparatus is utilized for setting up connections between subscribers' lines.

The object of this invention is to provide in machine switching telephone systems involving subscribers' lines comprising a plurality of substations, a message registering arrangement whereby the message register individual to any of the several substations on the line is operated in response to calls initiated at such substations.

A feature of the invention consists in the provision of means whereby the preliminary or finder switch, which serves to automatically extend party lines, is variably operated dependent on the particular substation at which the call is initiated and determines by such variable operation the selection and operation of the message register individual to the calling substation.

Other features of the invention will become apparent from a consideration of the following description and the appended claims.

In the drawings, Fig. 1 shows a telephone line equipped with four subscribers' substations and terminating in the multiple contacts of finder switches in the exchange. This figure also shows four message registers, one individual to each of the subscribers' substations, for charging the calls made on the party line. Fig. 2 shows the detailed circuits of a connecting link comprising a line finder switch and a first group selector switch for extending the party lines. This figure also contains a diagrammatic illustration of a second group selector switch and a register-controlling mechanism for controlling the switches.

The finder and group-selector switches disclosed in this system are of the well-known rotary power-driven type. The detailed operation of these switches and also of the register-controlling mechanism, which controls the selective movements of the group selectors, may be substantially the same as that described in detail in the British patent issued to Western Electric Company, Limited, Number 146,517, accepted October 5, 1921.

According to the system in which the present invention is embodied, the party lines, such as the one shown in Fig. 1, are arranged to appear in a plurality of positions in the multiple bank of the line finder switches. Each party line is provided with as many sets of terminals in the finder bank as there are substations on the line, these sets of terminals being individual respectively to the several substations. A plurality of line relays, associated with the party line, are arranged to be operated in different combinations, responsive to the initiation of calls at the subscribers' substations. In addition to the usual equipment at the subscribers' substations, there is provided means for producing a momentary electrical condition on the party line on the initiation of the call at any of the substations. This means is so designed that each of the subscribers' substations produces an electrical condition on the line which is characteristic of that particular substation and differs from the electrical condition caused by the initiation of calls at any of the other substations. Dependent upon which of the substations of the party line initiates a call, the line relays in the exchange respond to the electrical condition produced at that substation to energize in a particular combination. According to the combination in which the line relays are energized, the line finder switch is started in operation to automatically seize the set of terminals in the finder bank which is individual to the calling substation. The seizure of the particular set of terminals, which identifies the calling substation, determines the selection and operation of the message register individual to the calling substation to the exclusion of the remaining registers of the party line.

In the following detailed description of the operation of the system it will be assumed that the subscriber at substation 101 on the party line 131, 132 wishes to hold conversation with the subscriber at substation 200. For simplicity the called line is shown as an ordinary single substation line. When

the subscriber at substation 101 removes his receiver from the switchhook 133 to initiate the call, a spring 134 is momentarily pressed into engagement with its cooperating contact by the upward movement of said switchhook. The closure of the contact spring 134 completes a circuit from ground through the contacts of said springs, conductor 131, left-hand armature and contact of relay 108, left-hand winding of line relay 105, left-hand winding of line relay 106, to battery and ground. Relays 105 and 106 become energized in this circuit and a circuit is established from battery through the right-hand winding of relay 108, armature and contact of relay 109, armature and front contact and right-hand winding of relay 105, right-hand armature and back contact of relay 107, resistance 119, winding of start relay 110 to ground. Relay 105 locks up in this circuit but relay 108 does not receive sufficient current in series with resistance 119 and the winding of relay 110 to become energized. As soon as contact spring 134 again opens as the switchhook 133 reaches the extent of its upward movement, relay 106 becomes deenergized. The start relay 110 also energizes in series with the right-hand winding of relay 105 and establishes a circuit from ground through its armature and contact, conductor 135, contact 201 (1) of sequence switch 210, winding of relay 202 to battery and ground. Relay 202 energizes and completes a circuit from battery over sequence switch contact 204 (1), winding of the power magnet 203 of the line finder switch, back contact and armature of relay 206, front contact and armature of relay 202, back contact and armature of relay 211 to ground. The power magnet 203 energizes and causes the rotation of the brush carriage of the finder switch carrying the brushes 230, 231, 232 and 233 over the terminals of the bank in search of the particular set of terminals individual to the substation of the party line that has initiated the call. When the brushes 230, 231, 232 and 233 make engagement with the terminals 123, 124, 125, and 126, individual to the substation 101, a circuit is closed from battery through the right-hand winding of relay 108, armature and contact of relay 109, armature and front contact and right-hand winding of relay 105, right-hand armature and back contact of relay 107, resistance 119, terminal 126, brush 233, contact 215 (1), right-hand high resistance winding of test relay 205, back contact and lower armature of relay 213, contact 229 (1), contact 237 of the sender selector sequence switch 220 to ground. The test relay 205 energizes in this circuit and prepares a low resistance path to ground through its left-hand low resistance winding and contact and armature, resistance coil 281 and winding of relay 206. When the brushes of the finder switch are accurately centered on the terminals of the calling line, the interrupter 136 is opened to remove the shunt from around relay 206. Relay 206 thereupon energizes in series with the left-hand winding of relay 205. The low resistence circuit including the left-hand winding of relay 205 and the winding of relay 206 so reduces the potential on test terminal 126 as to render the terminals individual to the calling substation non-selectable by other finder switches. The attraction of the armature of relay 206 opens the circuit of power magnet 203 thus causing the brushes 230, 231, 232 and 233 to come to rest in engagement with the desired set of terminals. A circuit is also completed from battery through the winding of holding magnet 241, contact 240 (1), contact 222 (1), front contact and armature of relay 206, front contact and armature of relay 202 to ground at the back contact and armature of relay 211. The magnet 241 energizes and acts on the brush carriage to cause the accurate centering of the brushes on the selected set of terminals. Furthermore, relay 206, by attracting its armature, completes a circuit from battery through the winding of sequence switch 210, contact 222 (1), front contact and armature of relay 206, front contact and armature of relay 202, back contact and armature of relay 211 to ground. Sequence switch 210 energizes and moves from position 1 into position 4.

On leaving position 2 contact 201 is opened to permit the deenergization of relay 202. When sequence switch 210 reaches position 3, a circuit is closed from ground over contact 214 (3 to 13), upper armature and back contact of relay 213, winding of relay 207, brush 232, terminal 125, winding of message register magnet 114, winding of cut-off relay 109, through the two windings in series of cut-off relay 108 to battery and ground. Relay 108, which receives sufficient current in this circuit to become energized, disconnects the calling line 131, 132 from the line relays to prevent the initiation of other calls on said line. Relays 109 and 207 also energize in the circuit just traced. The relay 109 opens the circuit of line relay 105 permitting this latter relay to release its armature. The message register 114, which is individual to the calling substation 101, does not receive sufficient current in series with relays 108, 109 and 207 to operate. As soon as relay 207 attracts its armatures. in position 3 of sequence switch 220, relay 211 is energized in series with the calling line by means of the following circuit: battery, through the winding of relay 211, contact 212 (2 to 4), contact and lower armature of relay 207, brush 231, terminal 124, conductor 132, over the loop of the calling substation 101, conductor 131, terminal 123,

brush 230, upper armature and contact of relay 207, contact 208 (2 to 4), winding of retardation coil 209 to ground.

In position 4 of sequence switch 210, an idle register-controlling mechanism, such as the one generally designated at 242, is associated with the link circuit comprising the line finder and first group selector switch. For this purpose a selecting sequence switch 220 is provided for automatically testing and associating an idle controlling mechanism with the link circuit.

It may be well to note at this point that the sequence switch contacts, below the horizontal broken line in Fig. 2, are controlled by the selecting sequence switch 220, the remaining contacts in said figure being controlled by the sequence switch 210.

The circuit for initiating the operation of sequence switch 220 may be traced from battery through the winding of said sequence switch, contact 236 (4), back contact and armature of relay 206, contact 229 (4), contact 237, closed in some position from 1 to 10, to ground. When sequence switch 220 reaches a position corresponding to an idle register-controlling mechanism, a circuit is completed from ground over contact 237, closed in one of its half positions, conductor 243, right-hand high resistance winding of relay 205, contact 227 (4), contact 244 to battery through the winding of a relay, such as 245, in the register-controlling mechanism. Relay 205 energizes and closes a low resistance path to ground through its left-hand winding and contact and armature and the winding of relay 206. Relay 206 becomes energized and opens the circuit of sequence switch 220. The attraction of the armature of relay 206 also completes a circuit from battery, through the winding of sequence switch 210, contact 222 (4), front contact and armature of relay 206, contact 229 (4), to ground at contact 237. Sequence switch 210 thereupon moves from position 4 into position 5. For a detailed explanation of the manner in which an idle register-controlling mechanism is tested and seized by sequence switch 220 and rendered busy to other selecting sequence switches, reference is made to the above-mentioned British Patent No. 146,517, accepted October 5, 1921.

With sequence switch 210 in position 5, the calling line is extended by way of contacts 208 and 212, conductors 246 and 247, contacts 248 and 249 of sequence switch 220, and conductors 250 and 251 to the selected register-controlling mechanism. In the manner described in the above-mentioned application, the calling subscriber now proceeds to transmit impulses to position the registers of the controlling mechanism in accordance with the called line designation.

After the registration has been set up and the controlling sequence switches of the register-controlling mechanism advanced to the proper positions, the fundamental circuit is closed for controlling the brush-selecting operation of the first group selector switch. The fundamental circuit may be traced from battery, through the winding of relay 202, contact 228 (5), contact 252, winding of stepping relay 253, contact and armature of relay 254, contact 255 to ground. Relay 202 attracts its armature and completes a circuit from battery, through the winding of sequence switch 210, contact 222 (5), front contact and armature of relay 202, back contact and armature of relay 211 to ground. It will be observed that relay 211 deenergized when sequence switch contacts 208 and 212 passed out of position 4. Sequence switch 210 becomes energized in this circuit and advances from position 5 into position 6. In position 6 of sequence switch 210, a circuit is completed from battery through the winding of the trip spindle power magnet 224, contact 225 (6), front contact and armature of relay 202, back contact and armature of relay 211 to ground. The power magnet 224 energizes and causes the rotation of the trip spindle from one brush-tripping position to another. As soon as the register which controls the brush-selecting operation has been satisfied, the fundamental circuit is opened and relay 202 releases its armature. The retraction of the armature of relay 202 opens the circuit of power magnet 224, causing the trip spindle to stop in position to trip the desired set of brushes 256, 257 and 258. Relay 202 also completes a circuit from battery through the winding of sequence switch 210, contact 221 (6), back contact and armature of relay 202, back contact and armature of relay 211 to ground. Sequence switch 210 is driven out of position 6. As soon as sequence switch 210 reaches position 7, the relay 202 is again energized by means of a circuit from battery through the winding of said relay, contact 227 (7 to 9), contact 244 to ground by way of a contact, such as 260, at the register-controlling mechanism. Relay 202, by attracting its armature, opens the driving circuit of sequence switch 210, whereupon said sequence switch comes to rest in position 7.

In position 7 of sequence switch 210, the power magnet 219 is energized for rotating the brush carriage which carries the brushes 256, 257 and 258 to select an idle trunk leading to a second group selector. The circuit for magnet 219 may be traced from battery through the winding of said magnet, contact 223 (7), back contact and armature of relay 206, front contact and armature of relay 202, back contact and armature of relay 211 to ground. The test terminals 265 of idle trunks are identified by

the presence of a full battery potential thereon. When, therefore, the test brush 258 encounters the test terminal 265 of the first idle trunk in the group, a circuit is completed from battery through terminal 265, brush 258, contact 215, right-hand high resistance winding of relay 205, back contact and lower armature of relay 213, contact 229 (7) to ground at contact 237. Relay 205 becomes energized and completes a low resistance path to ground through its left-hand winding and contact and armature, resistance coil 281 and the winding of relay 206. This low resistance circuit reduces the potential on terminal 265 to render the selected trunk busy to other group selector switches. With the brushes 256, 257 and 258 accurately centered on terminals 263, 264 and 265, the interrupter brush 266 breaks engagement with the contact strip 267 and removes the shunt from around the winding of relay 206. Relay 206 thereupon energizes in series with the left-hand winding of relay 205 and opens the circuit of power magnet 219. Relay 206 at the same time closes a circuit from battery through the winding of holding magnet 268, contact 240 (7), contact 222 (7), front contact and armature of relay 206, front contact and armature of relay 202, back contact and armature of relay 211 to ground. The holding magnet 268 operates on the brush carriage to stop the brushes accurately in engagement with the trunk terminals. Relay 206 also closes a circuit from battery through the winding of sequence switch 210, contact 222 (7 to 8), front contact and armature of relay 206, front contact and armature of relay 202 to ground at the back contact and armature of relay 211. Sequence switch 210 moves from position 7 over position 8 and into position 9.

In position 9 of sequence switch 210, the fundamental circuit including conductors 270 and 271 is closed by way of contacts 228 and 234 through to the second group selector switch whose brushes are shown at 272 and 273. The second group selector, and as many succeeding switches as may be required in the extension of the connection, are operated under the control of the register-controlling mechanism in the manner described in the above mentioned British Patent No. 146,517, accepted October 5, 1921. When the switches have all been positioned and the connection established to the called line, the register-controlling mechanism 242 advances to a point where contact 260 is opened. The opening of contact 260 severs the above-traced circuit which, up to this time, has been maintaining the energization of relay 202. Relay 202 releases its armature and completes a circuit from battery through the winding of sequence switch 210, contact 221 (9), back contact and armature of relay 202, back contact and armature of relay 211 to ground. Sequence switch 210 is driven from position 9 into position 10. In this position a circuit is closed over contact 216 and the back contact and armature of relay 217 for driving sequence switch 210 into position 11.

In position 11, relay 211 is again energized in series with a calling line and the retardation coil 209, its circuit being closed by contacts 208 and 212 (10 to 14). When the called subscriber answers by removing his receiver from the switchhook, a circuit is established from battery through the winding of relay 217, contact 235 (10 to 12), brush 257, terminal 264, brush 273, terminal 274, over the loop of substation 200, and returning by way of terminal 275, brush 272, terminal 263, brush 256, contact 234 (10 to 12), winding of retardation coil 218, front contact and armature of relay 211 to ground. Relay 217 becomes energized and completes a circuit from battery through the winding of sequence switch 210, contact 222 (11), front contact and armature of relay 217 to ground. Sequence switch 210 moves from position 11 into position 12, which is the talking position.

After the conversation has been completed and the calling and called subscribers have restored their receivers to the switchhooks, relays 211 and 217 become deenergized. Relay 211 closes a circuit from ground through its armature and back contact, armature and back contact of relay 202, contact 221 (12 to 13), winding of sequence switch 210 to battery and ground. Sequence switch 210 moves out of position 12 over position 13 and into position 17. In this position a circuit is closed from battery through the winding of the brush carriage power magnet 219, contact 223 (17), back contact and armature of relay 206, contact 229 (17 to 18) to ground at contact 237. It will be observed that the relays 205 and 206 were deenergized as sequence switch contact 215 passed out of position 12. The brush carriage is restored by power magnet 219 and upon reaching its normal position a circuit is closed from battery through contact 204 (16 to 18), brush 266, winding of relay 206 to ground. Relay 206 energizes and opens the driving circuit of magnet 219 causing the brush carriage to come to rest in its home position. Relay 206 also closes a circuit from battery through the winding of sequence switch 210, contact 222 (16 to 18), front contact and armature of relay 206, contact 229 (17 to 18), contact 237 to ground. Sequence switch 210 energizes in this circuit and moves from position 17 into position 1.

When sequence switch 210 passes through positions 14 to 16 in response to the deenergization of relay 211, the following circuit

is closed for operating the message register 114 individual to the calling substation 101 on the party line: Positive pole of battery 238, resistance 239, contact 214 (14 to 16), upper armature and back contact of relay 213, winding of relay 207, brush 232, terminal 125, winding of message register magnet 114, windings of relays 109 and 108, to the negative pole of battery and ground. The additional flow of current in this circuit caused by the application of battery 238 is sufficient to operate the message register 114 to charge the call against the subscriber of substation 101. The cut-off relays 108 and 109 are deenergized as soon as sequence switch 210 leaves position 16 to reassociate the line relays 105, 106 and 107 with the party line for subsequent calls.

In the event that the called line is found busy or that the called subscriber fails to answer and the calling subscriber is obliged to abandon the call without having obtained a conversation with the desired party, it is necessary to provide means to prevent the charging of such an unsuccessful call. It will be remembered that the sequence switch 210 advanced from position 9 into position 10 and then into position 11 responsive to a circuit change produced in the register-controlling mechanism after the connection had been established through to the called line. The sequence switch 210 waits in position 11 for the removal of the receiver from the switchhook at the called substation, whereupon it moves into position 12. If the call proves to be unsuccessful, the sequence switch 210 remains in position 11 and upon the calling subscriber replacing his receiver on the switch hook, relay 211 deenergizes and closes the following circuit: ground, through the armature and back contact of relay 211, armature and back contact of relay 202, contact 221 (11), resistance 269, upper winding of relay 213, to battery and ground. Relay 213 energizes and completes a circuit from battery through the winding of sequence switch 210, lower winding and front contact and lower armature of relay 213, contact 229 (9 to 14), contact 237 to ground. Sequence switch 210 energizes in series with the lower winding of relay 213 and moves from position 11 over positions 12 and 13 and into position 17. Since the relay 213 is energized while sequence switch 210 is passing through positions 14 to 16, the above-traced circuit for the application of battery 238 is maintained opened at the upper armature and back contact of relay 213. The message register 114, therefore, does not operate to charge the call against the calling subscriber. In position 17 of sequence switch 210, the group selector is restored to its normal position in the manner above described.

Assume next that the subscriber at substation 102 on the party line 131, 132 wishes to extend a connection. The removal of the receiver from the switchhook at this substation causes the spring 138 to make a momentary closure with its cooperating contacts. The closure of the spring contact 138 completes a circuit from battery through the middle winding of line relay 107, contact and right-hand armature of relay 108, conductor 132, spring 138 to ground. Relay 107 becomes energized. The closure of spring contact 138 also completes a circuit from battery 139, left-hand winding of line relay 106, left-hand winding of line relay 105, contact and left-hand armature of relay 108, conductor 131, spring 138 to ground. Relays 105 and 106 become energized in this circuit. With relays 105, 106 and 107 simultaneously energized, a circuit is completed from battery through the right-hand winding of relay 108, armature and contact of relay 109, armature and front contact and right-hand winding of relay 105, right-hand armature and front contact and right-hand winding of relay 107, resistance 120, winding of start relay 111 to ground. Relays 105 and 107 lock up in series with relay 108. Relay 106, however, deenergizes as soon as the spring contact 138 is opened, since the locking circuit for the right-hand winding of this relay is opened at the back contact and armature of relay 105. The energization of the start relay 111 initiates the operation of the line finder switch in the manner above described. The finder switch continues to operate until its brushes at 230, 231, 232 and 233 engage the terminals 127, 128, 129 and 130, individual to the substation 102 on the party line. A selectable potential now occurs on the terminal 130, the circuit for applying this potential being traceable from battery through the right-hand winding of relay 108, armature and contact of relay 109, armature and front contact and right-hand winding of relay 105, right-hand armature and front contact and right-hand winding of relay 107, resistance 120 to the terminal 130.

If a call is initiated by the subscriber at substation 103, contact spring 140 momentarily closes a circuit from battery through the middle winding of relay 107, contact and right-hand armature of relay 108, spring 140 to ground. Relay 107 energizes and locks up in a circuit from battery through the right-hand winding of relay 108, armature and contact of relay 109, armature and back contact of relay 105, left-hand armature and contact and left-hand winding of relay 107, armature and back contact of relay 106, resistance 121, winding of relay 112 to ground. Relay 112 initiates the operation of the line finder switch which continues to operate until its brushes are in engagement with the terminals 141, 142, 143 and 144, individual to the substation 103.

When a call is initiated at substation 104,

contact spring 145 momentarily closes both sides of the line 131 and 132 in series. A circuit is then established from battery through the middle winding of relay 107, contact and right-hand armature of relay 108, conductor 132, contact spring 145, conductor 131, armature and contact of relay 108, left-hand winding of relay 105, left-hand winding of relay 106, to battery 139 and ground. It will be observed, that the battery 139, which is of comparatively low potential, is opposed by the battery connected in series with the middle winding of relay 107. Relay 106 is arranged to energize, as above explained, by current flowing from battery 139 to ground at the substations. Relay 105, however, does not receive sufficient current to energize in the circuit just traced where battery 139 and the battery at the middle winding of relay 107 are connected in opposition to each other. Hence, when a call is initiated at substation 104, relays 106 and 107 energize and relay 105 remains deenergized. A circuit is then closed from battery through the right-hand winding of relay 108, armature and contact of relay 109, armature and back contact of relay 105, left-hand armature and contact and left-hand winding of relay 107, armature and front contact and right-hand winding of relay 106, resistance 122, winding of start relay 113 to ground. Relay 113 initiates the operation of the finder switch which continues to move until its brushes engage the terminals 146, 147, 148 and 149, individual to the substation 104.

The message registers 115, 116 and 117 are individual respectively to substations 102, 103 and 104, and are operated as explained whenever calls initiated by these substations are successfully completed.

What is claimed is:

1. In a telephone system, a telephone line having a plurality of subscribers' substations thereon, a plurality of registering devices, a variably operable automatic switch for extending said line, means responsive to the initiation of a call on said line for starting said switch in operation, means dependent on which substation initiates the call for determining the operation of said switch, and means dependent upon the operation of said switch for selecting one of said registering devices.

2. In a telephone system, a telephone line having a plurality of subscribers' substations thereon, a plurality of registering devices one for each of said substations, a variably operable automatic switch for extending said line, means responsive to the initiation of a call on said line for starting said switch in operation, means dependent on which substation initiates the call for determining the operation of said switch, and means dependent on the operation of said switch for selecting the registering device individual to the calling substation.

3. In a telephone system, a telephone line having a plurality of subscribers' substations thereon, a plurality of registering devices, a variably operable automatic switch for extending said line, a plurality of sets of terminals for said line in said switch, means responsive to the initiation of a call on said line for starting said switch in operation, means dependent on which substation initiates the call for stopping said switch in engagement with one of said sets of terminals, and means dependent on the set of terminals chosen by the automatic switch for selecting one of said registering devices.

4. In a telephone system, a telephone line having a plurality of subscribers' substations thereon, a plurality of registering devices one for each of said substations, a variably operable automatic switch for extending said line, a plurality of sets of terminals one for each substation in said automatic switch, means responsive to the initiation of a call on said line for starting said switch in operation, means dependent on which substation initiates the call for stopping said switch in engagement with the set of terminals individual to the calling substation, and means dependent on the set of terminals chosen by the automatic switch for selecting the registering device individual to the calling substation.

5. In a telephone system, a telephone line having a plurality of subscribers' substations thereon, a plurality of message registers, a variably operable finder switch for extending said line, a group of relays responsive to the initiation of calls on said line and arranged to be operated in variable combinations dependent on which substation initiates the call, means dependent on the combination of said relays operated for determining the operation of said finder switch, and means dependent on the operation of said switch for selecting one of said registers.

6. In a telephone system, a telephone line having a plurality of subscribers' substations thereon, a plurality of message registers, a variably operable finder switch for extending said line, means responsive to the initiation of a call on said line for starting said switch in operation, means dependent on which substation initiates the call for determining the operation of the finder switch, means for further extending said line to establish a talking connection, means dependent on the operation of said finder switch for selecting one of said message registers, and means rendered effective in the establishment of said connection for operating the selected register.

7. In a telephone system, a calling line having a plurality of subscribers' substa-

tions thereon, a plurality of message registers, a variably operable finder switch for extending said line, means responsive to the initiation of a call on said line for starting the finder switch in operation, means dependent on which substation initiates the call for determining the operation of said switch, a called line, means for further extending the calling line to establish a connection with said called line, means dependent on the operation of said finder switch for selecting one of said message registers, and means under the control of the called subscriber for operating the selected register.

8. In a telephone system, a telephone line having a plurality of subscribers' substations thereon, a plurality of registering devices, a variably operable automatic switch for extending said line, means dependent on which one of said substations initiates a call for determining the operation of said switch, and means dependent on the operation of said switch for selecting one of said registering devices.

9. In a telephone system, a telephone line having a plurality of subscribers' substations thereon, a plurality of register devices, a variably operable automatic switch for extending said line, means dependent on which substation initiates a call for determining the extent of operation of said switch, and means dependent on the extent of operation of said switch for selecting one of said register devices.

10. In a telephone system, a telephone line having a plurality of substations thereon, a characteristic device at each substation rendered effective when a call is initiated thereat, a variably operable automatic switch for extending said line, means responsive to the initiation of a call on said line for starting said switch in operation, means dependent on which one of said characteristic devices is rendered effective for determining the operation of said switch, and means dependent upon the operation of said switch for selecting one of said registering devices.

11. In a telephone system, a telephone line having a plurality of substations thereon, a plurality of message registers, one for each substation, a variably operable switch for extending said line, means responsive to the initiation of a call on said line for starting said switch in operation, means dependent on which substation initiates the call for determining the extent of operation of said switch, and means dependent upon the extent of operation of said switch for selecting and operating one of said registering devices.

12. In a telephone system, a telephone line having a plurality of substations thereon, a plurality of message registers, a variably operable switch for extending said line, a group of relays responsive to the initiation of calls on said lines and arranged to be operated in variable combinations dependent on which substation initiates the call, means dependent on the particular combination of said relays operated for determining the extent of movement taken by said switch, and means dependent on the extent of movement taken by said switch for selecting one of said registers.

13. In a telephone system, a telephone line having a plurality of substations thereon, a plurality of registers, a variably operable automatic switch for extending said line in a talking connection, means dependent on which one of the substations initiates a call for determining the extent of operation of said switch, and means dependent upon the operation of said switch for selecting one of said registers.

14. In a telephone system, a telephone line having a plurality of substations thereon, a plurality of registering devices, a variably operable automatic switch for extending said line to establish a talking connection, means responsive to the initiation of a call on said line for starting said switch in operation, means dependent on which substation initiates the call for determining the operation of said switch, means dependent upon the operation of said switch for selecting one of said registering devices, means for releasing the established connection, and means rendered effective during the release of the connection for operating the selected registering device.

In witness whereof, I hereunto subscribe my name this 2nd day of April, A. D., 1920.

LIPA POLINKOWSKY.