July 9, 1940. J. R. BERNSTEIN 2,207,476

SHOE STUD

Filed June 1, 1938

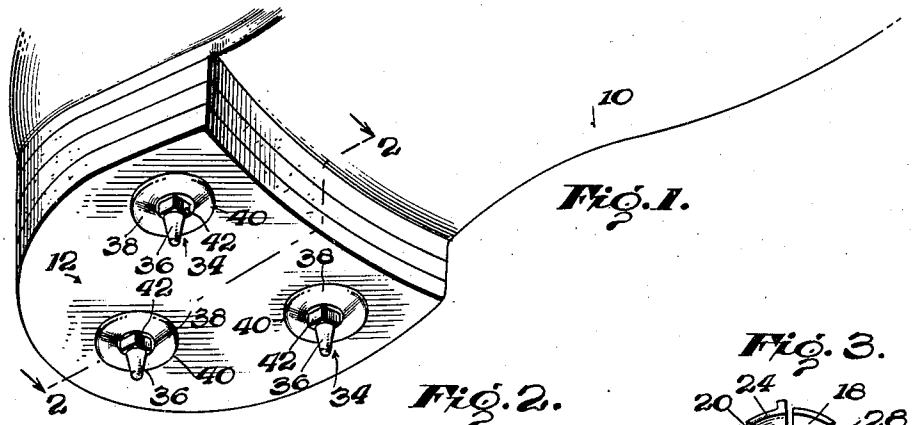


Fig. 1.

Fig. 2.

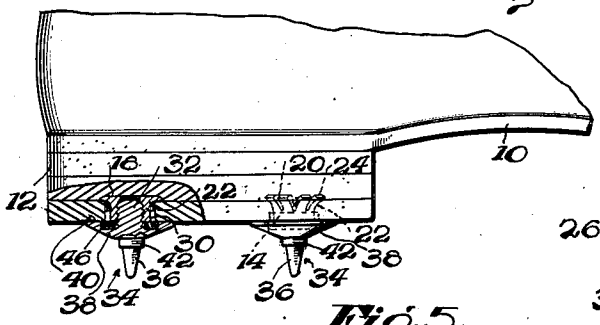


Fig. 3.

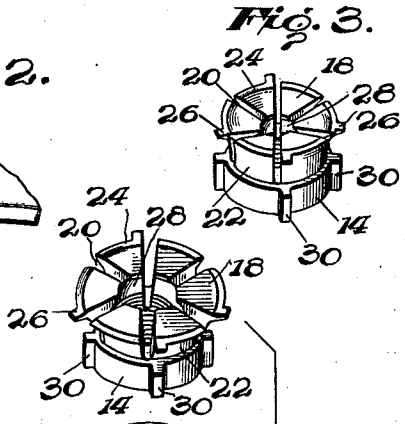


Fig. 5.

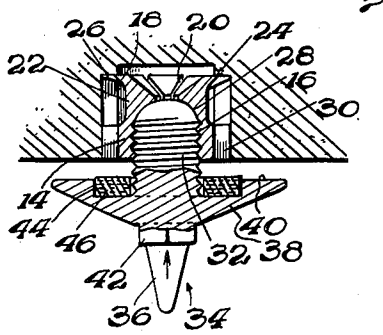


Fig. 4.

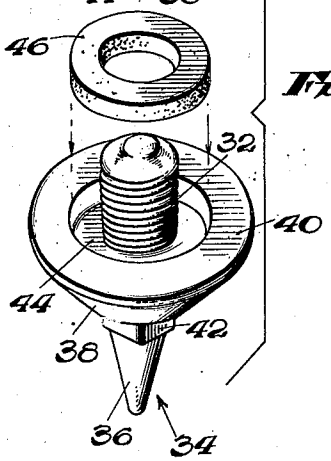


Fig. 6.

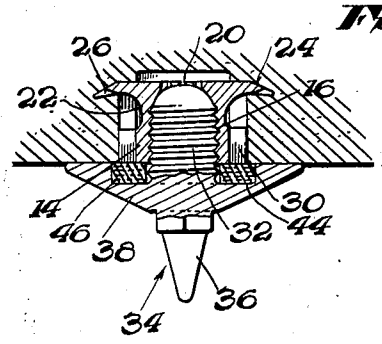


Inventor

Joseph R. Bernstein.

By Richard L. Underwood

Attorney

Patented July 9, 1940

2,207,476

# UNITED STATES PATENT OFFICE

2,207,476

## SHOE STUD

Joseph R. Bernstein, Chicago, Ill.

Application June 1, 1938, Serial No. 211,277

13 Claims. (Cl. 36—59)

This invention relates to removable studs or cleats adapted for insertion into the sole or heel of a completed shoe and has particular reference to a composite assembly, one component portion of which comprises a bushing or socket adapted to be permanently inserted in the sole or heel of a completed shoe and a second component element comprising a stud adapted to be removably associated with said bushing.

The idea expressed above is not broadly novel, having been suggested by one E. A. Plant in his Patent No. 1,433,411. Of course it is old to provide bushings or sockets for removably receiving studs, but hitherto the bushing has been associated with the sole or heel during the manufacture of the shoe as a distinct operation before the completion thereof. It is also old to insert studs in completed shoes by means of driving or hammering them, with or without a special tool designed for the purpose, into the leather, the stud being provided with prongs or bifurcated bite portions adapted to dig into the material and spread apart as the stud is driven in.

The last-mentioned means of securement to the sole material is used by the aforesaid Plant for the purpose of associating with the sole or heel of the completed shoe a threaded bushing adapted to receive the threaded shank of a stud. This method of associating studs, or a component portion thereof such as a bushing, with the sole leather after completion of the shoe involves the driving in and spreading apart of bifurcations and has proved entirely unsatisfactory. In the first place, it tends to mutilate the sole material and, more important, it is impossible to obtain a firm, rigid attachment by this means. The stud so associated with the sole material, or a bushing so associated therewith, soon works loose with the continued stress and strain applied to the joint and in little or no time the stud is useless. Once the element has worked loose it is of course impossible to reinsert it in the sole material by the same means and the sole material has become useless by virtue of such mutilation.

An object of this invention is to eliminate all of the above difficulties, enabling the securement of a removable and replaceable stud or cleat in the sole of a completed shoe by simply drilling a hole to the desired depth in the sole material, inserting an internally threaded bushing in the drilled hole, and locking the bushing rigidly and securely in place by threading the shank of the stud into the bushing. It is believed that this idea is broadly novel and the process as well as the resultant product has a great many distinct advantages.

Not only may the customer select any desired shoe at the retail establishment and have it equipped with studs without loss of time, but the studs may be readily replaced at will when worn or studs of different types may be readily inserted in lieu of those originally inserted.

Still another object of the invention is to so associate the internally threaded bushing with the sole material as to preclude the possibility of its rotation with reference to the material in which it is embedded, and to associate the stud with the inserted bushing in such manner that there is no possibility of rotation of the stud within the bushing, at the same time and by the same means providing a leak-proof seal precluding ingress of moisture and dirt into the bushing.

Various other objects and meritorious features of the invention will be apparent from the following description taken in conjunction with the drawing, wherein like numerals refer to like parts throughout the several figures, and wherein:

Figure 1 is a perspective of the under side of a completed shoe with which my improved stud has been associated;

Fig. 2 is a section along 2—2 of Fig. 1;

Fig. 3 is a perspective of the female bushing prior to insertion in the sole material;

Fig. 4 is an exploded view of the composite assembly, illustrating the bushing after insertion in the sole material;

Fig. 5 is a section through the composite assembly at the start of the locking operation, and

Fig. 6 is a similar section showing the locking operation completed and the stud firmly positioned in the sole material.

Referring now to Fig. 1 of the drawing, numeral 10 represents the sole of a shoe provided with a built-up heel 12 composed of several sole layers. It should be understood that the process described herein and the resulting product are the same regardless of whether the sole consists of built-up layers or of a single layer. In either instance the locking engagement of the female bushing is obtained by embedding a portion of the bushing in the fibers of the sole material, or, in the case of a built-up heel as illustrated herein, the locking engagement may be obtained partially by inter-engagement of the locking portion of the bushing between the component layers of the sole or heel.

Having first selected a completed shoe, holes are drilled in the sole from the outside thereof

to a depth adapted to receive a female bushing broadly illustrated by the numeral 14 in Fig. 3. The diameter of the hole drilled should approximate the outer diameter of said bushing at its lower end.

The lower end of the bushing is internally threaded as indicated at 16 and the other end is provided with a plurality of fingers 18 separated by slots 20. Each finger is provided with a concavity or groove 22 and the outer extremity of each is preferably provided with a lip 24 constituting a relatively sharp edge adapted to bite into the sole material. Certain of the fingers may be provided with tangs 26 at their lower extremities to likewise assist in forcing entry into the fibers of the sole material when the fingers are expanded or forced radially outwardly in a manner hereinafter to be described.

The inner surfaces of the fingers are preferably tapered as indicated at 28 to more readily cooperate in producing expanding action thereof in the manner contemplated. While such tapered form has been illustrated in the preferred embodiment, it will be apparent that this is not essential. The important feature resides in the fact that the inner surfaces of the fingers are so formed, or the fingers themselves are so formed, that they extend inwardly into the threaded bore of the bushing for a purpose to be brought out more clearly hereinafter.

The extremity of each finger 18 inclines radially inwardly and such inclination is toward the threaded end of the bushing, forming a concavity in the end of the bushing prior to spreading the fingers. This is clearly illustrated in Figs. 3 and 5 of the drawing. When the fingers are spread to the position illustrated in Figs. 4 and 6 the taper at the extremity of each finger assumes a plane substantially normal to the threaded bore of the bushing, forming a substantially flat annulus around the extremity of the shank 32.

The lower portion of bushing 14 is provided at spaced intervals with radially extending fins or webs 30, which fins are preferably in vertical alinement with hitherto described tangs 26. This alinement renders insertion of the bushing in the hole drilled therefor somewhat simpler.

Bushing 14 is inserted fingered end first into the hole drilled in the sole material. Were it not for the radially projecting tangs 26 and fins 30 said bushing could be simply dropped into the drilled hole, but by reason of these radial projections a slight tamping or tapping is necessary to complete the insertion. Fins 30 may or may not extend radially outwardly beyond tangs 26 and the diameter of the drilled hole is preferably sufficient to permit ready insertion of the bushing with only sufficient force to cause ingress of the tangs and to embed fins 30 in the sole material. When the bushing has been inserted to a point flush with the bottom of the sole, fins 30 function effectively to prevent rotation of the bushing. The tangs are not essential.

The bushing is then ready to receive the threaded shank 32 of a stud broadly indicated by numeral 34. The stud is provided with a tapered or cleat portion 36 and a radially extending wing portion 38 having a flat under surface 40. A squared shank 42 for cooperation with a wrench tool is formed at the base of the cleat where it merges with wing portion 38. An annular gasket seat 44 is provided in the flat under face 40 of said wing, surrounding the extremity of the threaded shank. Stud 34 is threaded into bushing 14 and, when the bottom of the threaded shank 32 reaches that portion of the fingers which extends into the threaded bore, as indicated in Fig. 5, continued rotation of the stud expands the fingers, forcing them radially outwardly into biting and locking engagement with the fibers of the sole material as clearly indicated in Fig. 6. The groove or concavity 22 assists materially in obtaining an outwardly directed flow of the finger metal as the threaded shank is inserted.

Gasket 46, which may be of rubber or any other suitable frictional material, is placed in the annular seat provided therefor prior to threading in the shank of the stud. By the use of a simple wrench tool in cooperation with shank 42 the threaded shank 32 may be rotated into the bushing until the flat under face 40 of wing 38 is firmly against the outside of the sole material, at which time the fingers have been expanded into interlocking engagement with the fibers of the sole material. Gasket 46 is preferably somewhat oversize and is compressed during the latter portion of the threading movement, thereby forming a complete seal for the interior of the threaded bushing and aiding in preventing rotation of the stud in said bushing.

Both the tangs 26 and the lips 24 of the fingers aid materially in biting into the fibers of the sole material as the said fingers are expanded or forced radially outwardly on continued threading in of stud 34.

Bushing 14 is firmly and rigidly embedded in the sole material and cannot work loose. This efficient and useful structure is obtained by the simple operation of drilling a hole in the completed shoe, inserting the improved bushing, and threading in the shank of a stud. The bushing is precluded from rotation with reference to the sole material not only by the fingers but by the webs 30 and, as aforesaid, the stud is substantially precluded from rotation in the bushing and with relation to the sole material by means of the frictional gasket 46.

While I have illustrated a certain preferred embodiment of my improved composite arrangement, various modifications will be apparent to those skilled in the art and for that reason I wish to limit myself only within the scope of the appended claims, wherein reference to the sole or sole material should be understood to include the heel portion.

What I claim is:

1. A composite stud for attachment to the drilled sole of a completed shoe comprising a bushing internally threaded at one end and having fingers at the other extending into the bore of the bushing, and a stud with an externally threaded shank adapted to be threaded into said bushing into engagement with said fingers to thereby spread the same radially outwardly.

2. A composite stud for attachment to the drilled sole of a completed shoe comprising a bushing internally threaded at one end and having fingers at the other extending into the bore of the bushing, said fingers including a concavity on the outer surface of each, and a stud with an externally threaded shank adapted to be threaded into said bushing into engagement with said fingers to thereby spread the same radially outwardly.

3. A composite stud for attachment to the drilled sole of a completed shoe comprising a bushing internally threaded at one end and having fingers at the other extending into the bore of the bushing, said fingers including a con-

cavity on the outer surface of each and a tapered inner surface, and a stud with an externally threaded shank adapted to be threaded into said bushing into engagement with said fingers to thereby spread the same radially outwardly.

4. A composite stud for attachment to the drilled sole of a completed shoe comprising a bushing internally threaded at one end and having fingers at the other extending into the bore of the bushing, said fingers including a tapered inner surface, and a stud with an externally threaded shank adapted to be threaded into said bushing into engagement with said fingers to thereby spread the same radially outwardly.

5. A composite stud for attachment to the drilled sole of a completed shoe comprising a bushing internally threaded at one end and having fingers at the other extending into the bore of the bushing, said fingers including a relatively sharp portion at their outer extremity, and a stud with an externally threaded shank adapted to be threaded into said bushing into engagement with said fingers to thereby spread the same radially outwardly.

6. A composite stud for attachment to the drilled sole of a completed shoe comprising a bushing internally threaded at one end and having fingers at the other extending into the bore of the bushing, tangs projecting radially outwardly from the extremity of said fingers, and a stud with an externally threaded shank adapted to be threaded into said bushing into engagement with said fingers to thereby spread the same radially outwardly.

7. A composite stud for attachment to the drilled sole of a completed shoe comprising a bushing internally threaded at one end and having fingers at the other extending into the bore of the bushing, said fingers including a concavity on the outer surface of each and a relatively sharp portion at their outer extremities, and a stud with an externally threaded shank adapted to be threaded into said bushing into engagement with said fingers to thereby spread the same radially outwardly.

8. A composite stud for attachment to the drilled sole of a completed shoe comprising a bushing internally threaded at one end and having fingers at the other extending into the bore of the bushing, said fingers including a concavity on the outer surface of each, a tapered inner surface, and tangs projecting radially outwardly from the extremities of certain fingers, and a stud with an externally threaded shank adapted to be threaded into said bushing into engagement with said fingers to thereby spread the same radially outwardly.

9. A composite stud for attachment to the drilled sole of a completed shoe comprising a bushing internally threaded at one end and having fingers at the other extending into the bore of the bushing, and a stud with an externally threaded shank adapted to be threaded into said bushing into engagement with said fingers to thereby spread the same radially outwardly, said stud including a radially extending wing portion at the base of the thread of its shank adapted to engage the outside surface of said sole.

10. A composite stud for attachment to the drilled sole of a completed shoe comprising a bushing internally threaded at one end and having fingers at the other extending into the bore of the bushing, and a stud with an externally threaded shank adapted to be threaded into said bushing into engagement with said fingers to thereby spread the same radially outwardly, said stud including a radially extending wing portion at the base of the thread of its shank adapted to engage the outside surface of said sole and an annular gasket seat on the under surface thereof surrounding the threaded shank.

11. A composite stud for attachment to the drilled sole of a completed shoe comprising a bushing internally threaded at one end and having fingers at the other extending into the bore of the bushing, said fingers including a tapered inner surface, and a stud with an externally threaded shank adapted to be threaded into said bushing into engagement with the tapered surface of said fingers to thereby expand the same radially outwardly, said stud including a radially extending wing portion at the base of the thread of its shank adapted to engage the outside surface of said sole.

12. A composite stud for attachment to the drilled sole of a completed shoe comprising a bushing internally threaded at one end and having fingers at the other extending into the bore of the bushing, said fingers including a relatively sharp portion at their outer extremities and a concavity on the outer surface of each, and a stud with an externally threaded shank adapted to be threaded into said bushing into engagement with said fingers to thereby expand the same into engagement with the material of said sole, said stud including a radially extending wing portion at the base of the thread of its shank and an annular gasket seat on the under surface thereof surrounding the threaded shank.

13. A composite stud for attachment to the drilled sole of a completed shoe comprising a bushing internally threaded at one end and having fingers at the other extending into the bore of the bushing, projections extending radially outwardly from the threaded end of said bushing, said fingers including a relatively sharp portion at their outer extremities and a concavity on the outer surface of each, and a stud with an externally threaded shank adapted to be threaded into said bushing into engagement with said fingers to thereby expand the same into engagement with the material of said sole, said stud including a radially extending wing portion at the base of the thread of its shank and an annular gasket seat on the under surface thereof surrounding the threaded shank.

JOSEPH R. BERNSTEIN.