Sept. 30, 1952 L. K. WARRICK ET AL 2,612,311

COMPRESSOR-MOTOR ASSEMBLY

Filed Jan. 26, 1949

Fig. 1

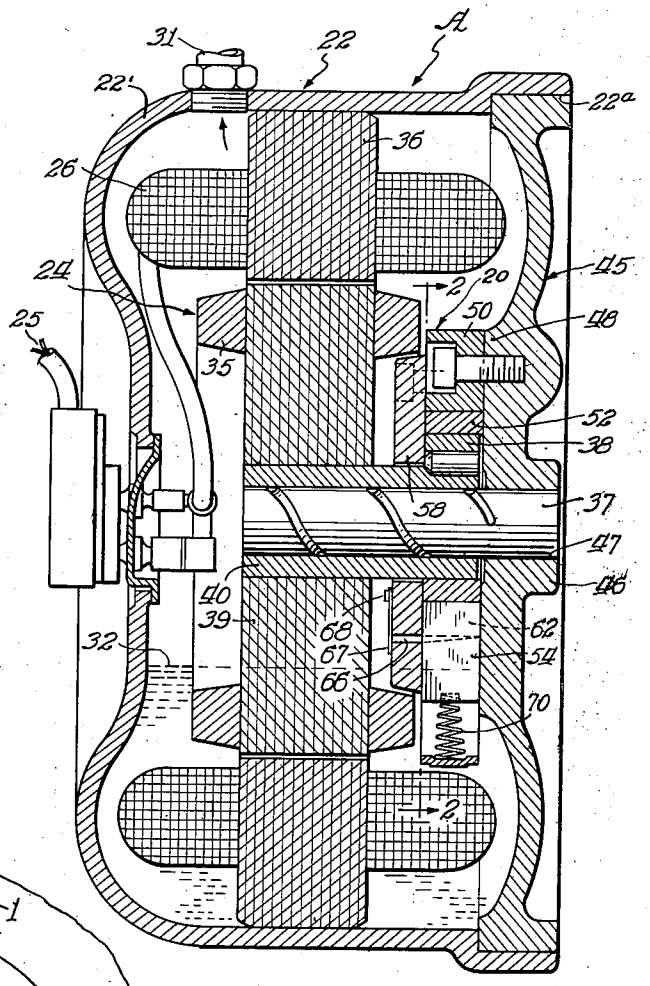

Fig. 3

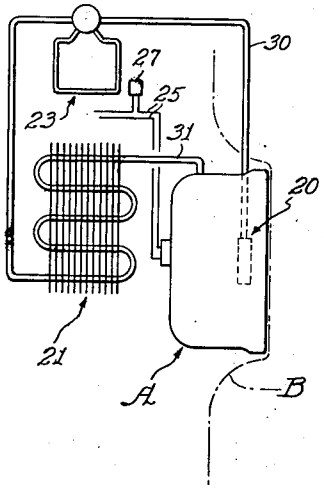

Fig. 2

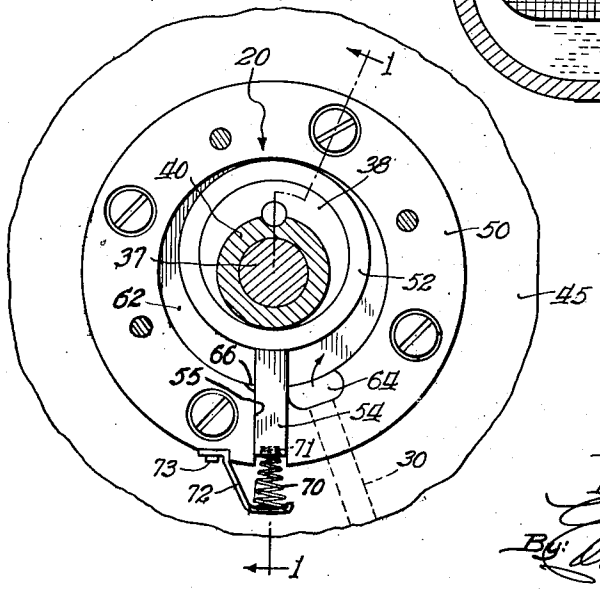

Inventors:
Leland K. Warrick and
Frank E. LaFlame

By: Edward C. Gertz Gangle
Atty.

Patented Sept. 30, 1952 2,612,311

UNITED STATES PATENT OFFICE

2,612,311

COMPRESSOR-MOTOR ASSEMBLY

Leland K. Warrick, Muskegon Heights, and Frank E. La Flame, Twin Lake, Mich., assignors to Borg-Warner Corporation, Chicago, Ill., a corporation of Illinois

Application January 26, 1949, Serial No. 72,794

1 Claim. (Cl. 230—139)

1

This invention relates in general to refrigerating systems of a type generally applicable for employment for domestic and other uses where individual units of relatively small capacity are employed and has particular relation to an improved arrangement of parts having special application as a refrigerant compressor.

It is a general object and accomplishment of the invention to provide an improved arrangement of elements forming a sealed housing compressor assembly having the minimum overall axial dimension while maintaining a high efficiency of operation and effecting a reduction in the cost of manufacture over that of similar units of present manufacture.

Another object and accomplishment of the invention is to provide an improved refrigerating system by co-relating and especially designing the various elements of such systems and whereby there shall be such cooperation between said improved elements as will best serve the purpose of providing an efficient system capable of being manufactured at low cost and yet giving the maximum of satisfactory service in use.

A further object and accomplishment of the invention is to provide an improved unit designed for refrigeration purpose which shall have a novel and compact arrangement of parts wherein said parts can be readily assembled and serviced.

It is a more detailed object of the invention to provide in a motor compressor unit of the above type an improved lubricating arrangement for insuring the delivery of the necessary lubricant to each of the vital moving parts.

The invention seeks, as a further object and accomplishment, to provide a refrigerator compressor as contemplated herein and characterized by an arrangement of parts to more advantageously and satisfactorily perform the function required of it and adapted to provide a compact unit which will successfully combine the factors of structural simplicity and durability, and yet be economical to manufacture.

A further object and accomplishment of the invention is to provide a new and improved form of sealed motor compressor unit which is adapted to be economically manufactured, and which is so designed as to permit the manufacture and assembly thereof, in accordance with present day large scale mass production manufacturing methods of construction and assembly.

Additional objects, features and advantages of the invention disclosed herein will be apparent to persons skilled in the art after the construction

2

and operation are understood from the within description.

It is preferred to accomplish the various objects of the invention and to practice the same in substantially the manner as hereinafter more fully described and, more particularly pointed out in the appended claim.

With these objects in view, together with others which will appear as the description proceeds, the invention resides in the novel construction and cooperative function of the parts thereof, the combination of parts, and the arrangement thereof as illustrated in the drawing and which will be more fully described hereinafter and particularly pointed out in the claim.

In the accompanying drawing on which there is shown a preferred embodiment of the invention,

Fig. 1 is a sectional view of a sealed motor compressor unit embodying the features of the present invention;

Fig. 2 is a sectional plan view of a portion of the motor compressor unit depicted in Fig. 1 and being taken on the plane of the line 2—2 in Fig. 1, the line 1—1 in this figure illustrating the section taken as depicted in Fig. 1; and

Fig. 3 diagrammatically illustrates a refrigerating system employing the sealed motor compressor unit contemplated herein.

The drawing is to be understood as being more or less of a schematic character for the purpose of illustrating or disclosing a typical or preferred form of the improvements contemplated herein.

Referring to the drawing, particularly Fig. 1, there is illustrated, in section, a sealed motor compressor unit designated in its entirety by the letter A and including a refrigerant compressor or pump indicated generally at 20.

The sealed motor compressor unit A with which the present invention is particularly concerned may advantageously be mounted in the lower portions of the cabinet or on the back panel B of a refrigerator cabinet because of its relatively small overall axial dimension. Moreover, the sealed motor compressor unit A may comprise a part of a refrigerating system of the compressor-condenser-expander type, such as illustrated in Fig. 3, and wherein refrigerant is circulated by means of the compressor or pump 20 through a condenser 21 for extracting or dissipating heat from the refrigerant medium and thence to a freezer or evaporator 23 in which the refrigerant medium is expanded or vaporized for absorbing heat and the refrigerant medium is thereafter

returned to the compressor from whence the cycle is repeated.

Suffice it to say, since the invention is not particularly concerned with the precise construction of the complete refrigerating system and/or its associated parts, they will not be further described in detail and it is deemed sufficient for all intentions and purposes herein contained to show only portions thereof adjacent to and cooperating with the sealed motor compressor unit contemplated herein. It is to be understood that details of construction of such refrigerating systems and their associated parts may be modified to suit particular conditions or to satisfy the engineering genius of various competitive manufacturers and we do not wish to be limited to the construction of these elements as set forth, except where such construction particularly concerns the invention contemplated herein.

Having thus described, by way of example, a possible adaptation of the sealed motor compressor unit, and having described the general environment surrounding the adaptation, the specific construction and functions of the parts of said sealed motor compressor unit contemplated herein and with which the present invention is particularly concerned, will now be described in detail.

In the exemplary embodiment of the invention depicted in Fig. 1, the compressor **20** is shown as being enclosed within a gas tight housing or casing indicated generally at **22** and an electric motor indicated generally at **24** is illustrated as being constructed integrally with the casing **22** and for operating the compressor. The motor **24** preferably is of the alternating current type and adapted to be supplied with electric energy through suitable conduits **25** operatively connected to the motor windings indicated generally at **26** and which are arranged internally of the casing **22**. Current may be supplied intermittently to the motor for operating the same at intermittent periods and the supply of current to the motor may be under the control of a switch **27** which is operatively associated with the evaporator or freezer element **23** of the refrigerating system so that the compressor may be operated in such a way as to maintain the temperature thereof and of the heat insulated compartment within which such evaporator may be arranged within said predetermined temperature limits.

In the construction illustrated in Figs. 1 and 2, the compressor **20** is arranged within the gas tight casing **22** and vaporous refrigerant from the evaporator is supplied to the intake side of the compressor **20** through the suction line **30**. The refrigerant is discharged from the compressor **20** into the interior of the casing **22** and the refrigerant is conducted from the casing **22** by means of conduit **31** to the condenser **21**. The casing **22** functions as a lubricant reservoir and the lubricant therein, which preferably stands to a level indicated by the line **32** in Fig. 1, is subjected to the discharge pressure thereof. As the refrigerant medium is supplied to the evaporator element **23** under control of a suitable refrigerant expansion control, such as a low side float, the space within the casing **22** and the condenser **21** constitute the high pressure side of the refrigerating system.

A lubricant is provided for lubricating the working parts of the system such as the moving parts of the compressor **20** and the motor, and some of this lubricant will circulate with the refrigerant throughout the system; however, a body of lubricant will collect within the lower part of the casing **22** and to such an extent as to partially submerge the compressor **20** therein. As the lubricant in the casing is subjected to the discharge pressure of the compressor and as the compressor is partially submerged in lubricant, the working parts of the compressor will be lubricated.

The motor **24** includes a rotor **35** and a stator **36** including the motor windings **26**. The rotor **35** of the motor includes an elongated sleeve **40** which is journalled on an axle or horizontally extending shaft **37** and which sleeve **40** has fixed thereto an eccentric element **38**. The eccentric element is adapted to form a part of the compressor **20** and the sleeve **40** forms a direct driving connection between the motor and the compressor.

The motor rotor **35** may be of conventional construction and comprise a stack of circular laminations **39** suitably secured together by any approved practice and press fitted or otherwise suitably secured to the sleeve **40** for rotation therewith. The motor rotor **35** may be provided with a plurality of axially extending passages (not shown), so as to permit the free passage of the refrigerant medium from one side thereof to the other. It is to be noted that motor rotor **35** is mounted on the free end of said shaft **37** so that said shaft provides a cantilever support for said motor rotor and sleeve **40**.

In accordance with the construction of the present invention, the stator **36** comprises a stack of annular laminations made of iron or any other suitable metallic material. The outer peripheral surface of the stator **36** is secured to the casing **22** by any approved or convenient means. The motor windings **26** may be secured in the conventional manner to the stator **36**.

The casing **22** comprises a cup-shaped or bell-shaped shell member **22'** and a frame member or disc shaped end plate **45** which may be advantageously fitted or telescoped into the mouth **22a** of the shell and suitably secured thereto, when in operative position, to define a hermetically sealed casing for the compressor unit. It is notable that the frame member or disc shaped end plate **45** is formed to define the shape as shown in order to take advantage of structural strength, the frame member **45** comprising a bearing plate portion **46** which is provided with a central aperture **47** arranged to receive the end portions of the shaft **37** in fixed relation thereto. The periphery of the frame member **45** and the mouth **22a** of the shell member **22'** preferably are provided with complementary interfitting aligning surfaces, so that the axis of the bearing and shaft **37** coincides with the axis of the stator **36**.

The frame member or disc shaped end plate **45**, on the interior thereof, is provided with a finished surface which forms a radial end face **48** of a rotary compressor and which further includes a cylinder or ring member **50**, a ring shaped rotor **52**, a divider **54** and the eccentric **38** and an annular plate **58**. The radial end face **48** and annular plate **58** and the cylinder **50** are rigidly assembled together in such a way as to form a closed cylindrical chamber **62** or pumping space and in which the rotor **52** is arranged for gyration. The rotor **52** is freely journalled on the eccentric **38** and, it will be observed, is of less diameter than the pumping chamber **62** in which it is arranged. The rotor **52** is of such size, relative to the cylinder **50**, that there is a

small working clearance between the vertical faces of the rotor and the adjacent vertical faces of the radial end face 48 and annular plate 58. Also, the diameter of the rotor 52 is such that there is a slight clearance between the periphery of the rotor 52 and the adjacent cylinder wall of the pumping chamber 62 at that point where the rotor 52 divides one side of the pumping chamber 62 from the other side thereof, as illustrated in Fig. 2, and this clearance is maintained as the rotor gyrates or moves around the pumping chamber 62 in a counter-clockwise direction, looking at Fig. 2.

The divider 54 is arranged for reciprocation within a slot 55 formed in the cylinder 50 and is disposed so that an end portion thereof is in engagement with the periphery of the rotor, as illustrated in Fig. 2, so as to separate the suction gas from the discharge gas in the pumping chamber 62. The divider 54 defines flat surfaces which slide on the flat surfaces of the slot in which the divider 54 reciprocates. The divider 54 preferably is of the same dimension, with respect to thickness, as the rotor 52, so that the divider 54 will form a moving seal between the periphery of the rotor 52 and the walls of the pumping chamber 62.

The pumping chamber is provided with an intake port as at 64 and with a discharge port 66 preferably, but not necessarily, controlled by a valve as at 67. The divider 54 is mounted for reciprocation in the slot 55 and is guided in its movement by a spring 70, one end of which being received into a recess 71 disposed in the end portions of the divider 54 and the other end being held in operative position by a bracket 72 secured in operative position to the outside surface of the cylinder 50 by screw means 73. Spring 70 acts to hold the divider 54 in contact with the periphery of the rotor 52.

The discharge port 66, which is formed in the end plate 58, opens into the body of the casing 22 in which the valve 67, which controls the discharge port, is arranged. The valve 67 may be a flap valve or a check valve and is preferably anchored at one end thereof by means of screws 68 through the end plate 58.

It is notable that an important feature of the invention is the unique association of parts which provides an assembled compressor unit of relatively small axial dimension which provides the advantage of being able to mount the compressor unit on the back portions of the refrigerator cabinet if desired. In some adaptations it may be desirable to mount the compressor assembly in the conventional lower portions of the refrigerator cabinet. In this connection a minimum amount of space will be required and any savings in space may be transferred to enlargement of the food storage chambers.

Another important feature of the invention is the cooperative association of the parts whereby the compressor and rotor assemblies may be advantageously mounted on the end plate 45 and the parts thereof being readily accessible for adjustment and placement in position, will thus facilitate ease of assembly under mass production manufacturing principles. Moreover, the subassembly of the shell member 22' comprising the stator 36 and the necessary wiring and contacts therefor, facilitate ease in completing the final assembly. This arrangement has its importance in servicing and repair of the device in that the shell member 22' may be conveniently removed from the end plate 45 thus exposing the working parts of the compressor and rotor assemblies for convenience of repair or replacement purposes. Otherwise stated when the subassembly of compressor and motor rotor assemblies mounted on the end plate 45 are telescoped within the subassembly of shell member 22' and stator 36, the motor rotor and compressor together with the radial end face 48 of said end plate 45 are confined within the volume defined by radial planes through the outer axial limits of the motor windings 26 to provide a complete assembly of minimum axial dimension and which easily assemble for repair purposes.

From the foregoing disclosure, it may be observed that we have provided an improved motor and compressor assembly for refrigerator systems which effectively fulfills the objects thereof as hereinbefore set forth and which provides numerous advantages which may be summarized as follows:

1. Structurally simple, efficient and durable;

2. Economical to manufacture and readily adaptable to mass production manufacturing principles; and

3. The provision of a motor compressor unit providing an improved arrangement of elements forming a sealed housing motor compressor assembly having the minimum overall axial dimension while maintaining a high efficiency of operation and effecting a reduction in the cost of manufacture over that of similar units of present manufacture.

While we have illustrated a preferred embodiment of our invention, many modifications may be made without departing from the spirit of our invention, and we do not wish to be limited to the precise details of construction set forth, but wish to avail ourselves of all changes within the scope of the appended claim.

We claim:

A motor compressor assembly adapted for mounting on the back surface of a refrigerator and including a first subassembly and a second subassembly, said first subassembly being telescoped within said second subassembly; said first subassembly comprising; a disc shaped end plate having a central aperture and a radial end face, a shaft having one end portion thereof fixedly received in said aperture, a relatively short sleeve member journaled on the free end portion of said shaft, a motor rotor fixed on said sleeve member, said motor rotor and said sleeve being supported solely by the free end portion of said shaft whereby said shaft forms a cantilever support for said motor rotor and sleeve; and a compressor including an eccentric member encircling and keyed to said sleeve adjacent said radial end face, a ring member radially aligned with accentric member and secured to said radial end face of said end plate, a ring shaped rotor of less diameter than said ring member and encircling said eccentric member, a second annular plate separated from said annular end face by said ring member and secured to said ring member to provied a pumping chamber in which said ring shaped rotor is arranged for gyration, said pumping chamber having an inlet and discharge port, and a spring mounted divider member projecting into engagement with said ring shaped rotor and reciprocating upon gyration of said ring shaped rotor to provide a separation for said inlet and discharge port; said second subassembly comprising, a bell-shaped shell member, a stator including motor rotor windings, the peripheral surface

of said stator being secured to the interior of said bell-shaped shell member so that the axis of said shaft is coaxial with the axis of the stator when the first subassembly is telescoped within the bell-shaped shell member, said bell-shaped shell member and said end plate defining a lubricant reservoir, a portion of said motor rotor disposed in lubricant contained in said reservoir and arranged to effect distribution of the lubricant to adjacent parts of the compressor upon rotation of said motor rotor; said first subassembly being telescoped within said second subassembly so that said motor rotor and compressor together with said radial end face of said end plate are confined within the volume defined by radial planes through the outer axial limits of said motor windings to provide a complete assembly of minimum axial dimension.

LELAND K. WARRICK.
FRANK E. LA FLAME.

REFERENCES CITED

The following references are of record in the file of this patent:

UNITED STATES PATENTS

Number	Name	Date
1,931,323	McCormack	Oct. 17, 1933
1,967,035	Lipman	July 17, 1934
2,040,507	Terry	May 12, 1936
2,130,349	Kucher	Sept. 20, 1938
2,162,639	Pontis	June 13, 1939
2,240,178	Brace	Apr. 29, 1941