July 25, 1967 K. E. LEINFELT ETAL 3,332,101

SURFACE CLEANING APPARATUS

Filed Aug. 12, 1964 8 Sheets-Sheet 1

FIG. 1

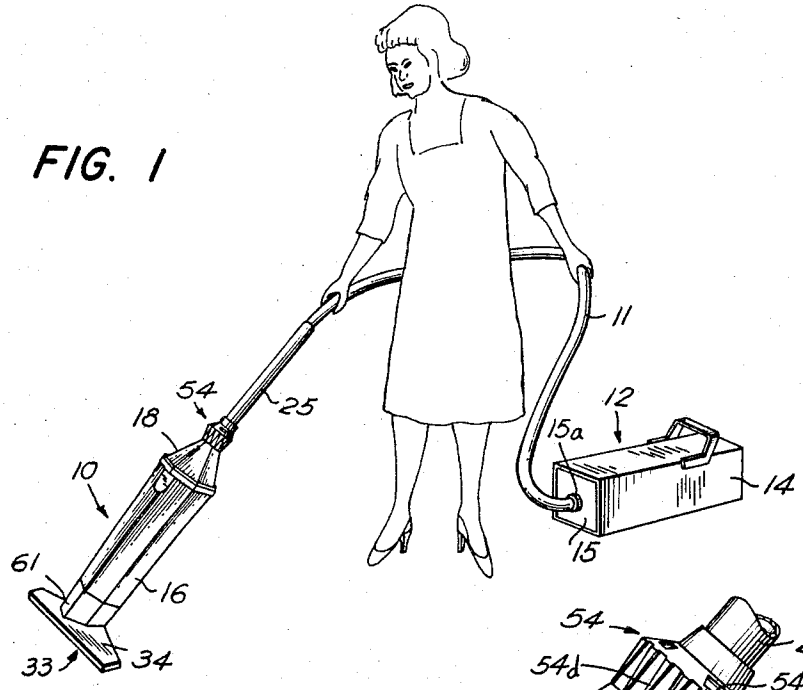

FIG. 2

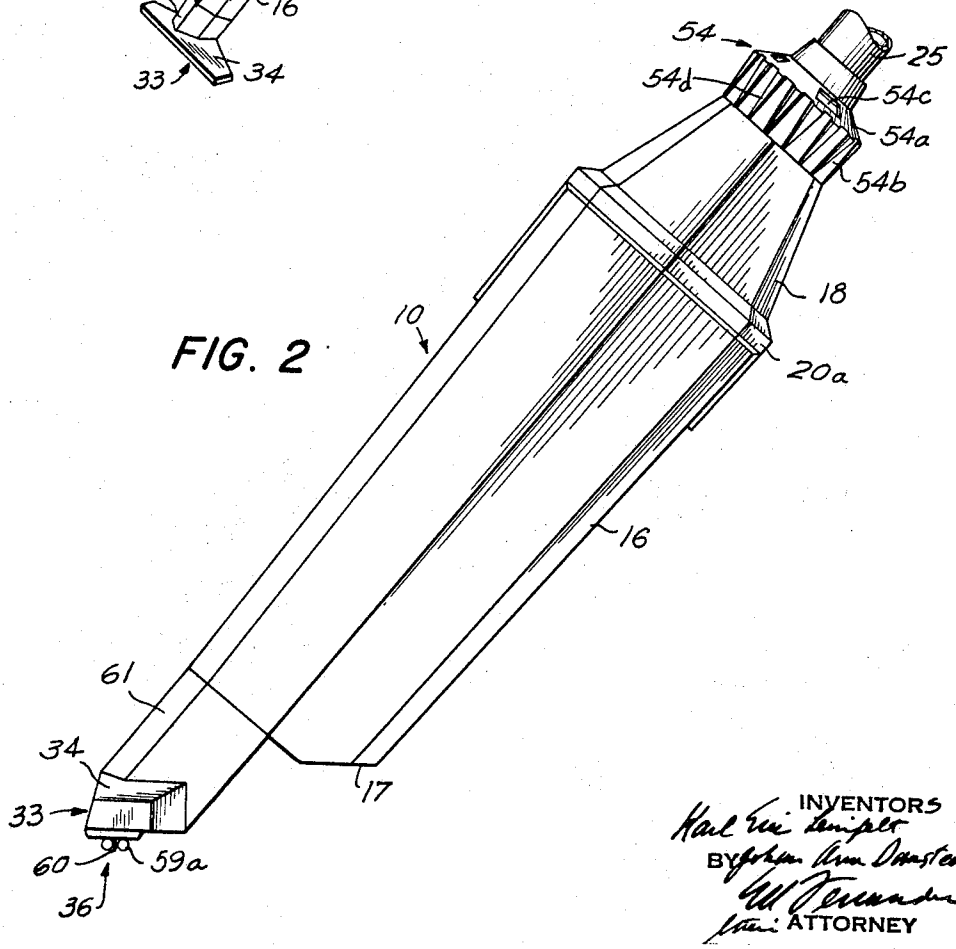

INVENTORS
Karl Eric Leinfelt
BY Johan Arne Danstedt
[signature]
ATTORNEY

SURFACE CLEANING APPARATUS

Filed Aug. 12, 1964 8 Sheets-Sheet 2

FIG. 4

FIG. 3

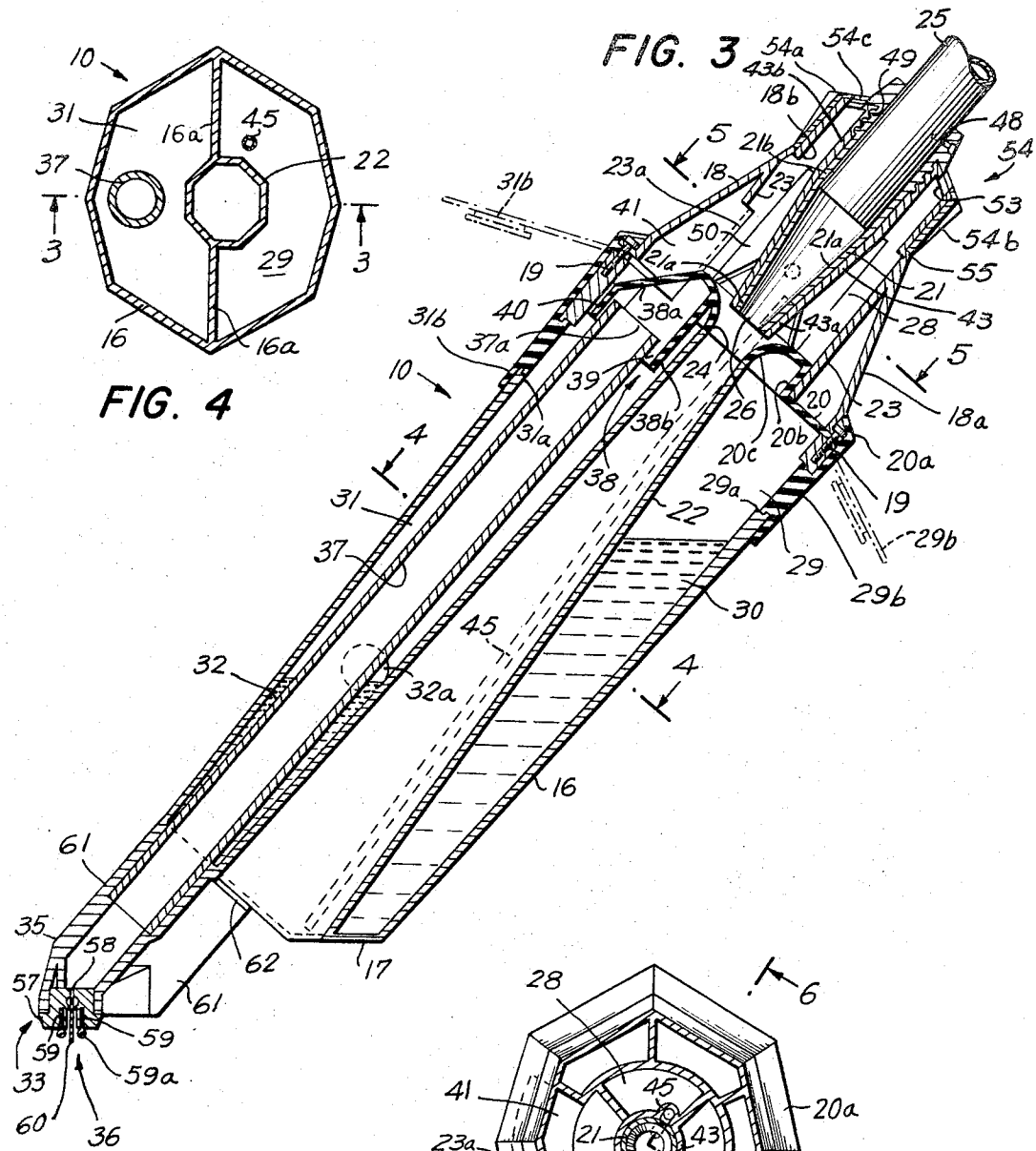

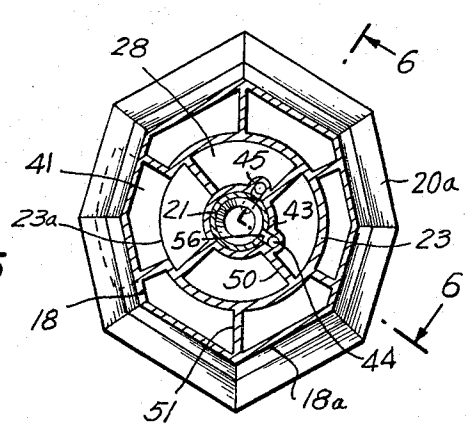

FIG. 5

INVENTORS
Karl Eric Leinfelt
BY Johan Arne Dunstedt
Wm Fernander
their ATTORNEY

July 25, 1967 K. E. LEINFELT ETAL 3,332,101

SURFACE CLEANING APPARATUS

Filed Aug. 12, 1964 8 Sheets-Sheet 3

FIG. 6

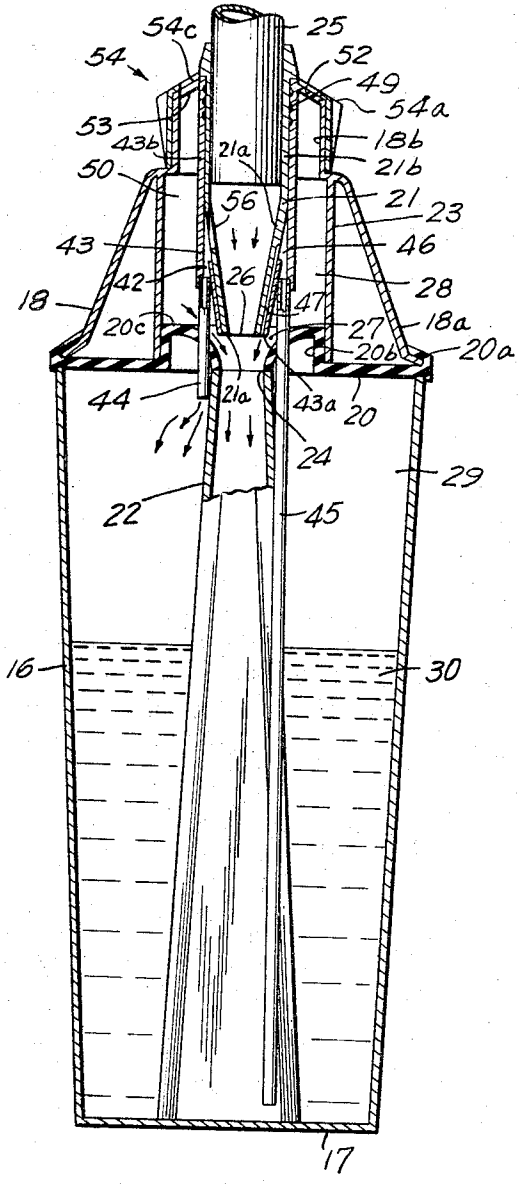

FIG. 7

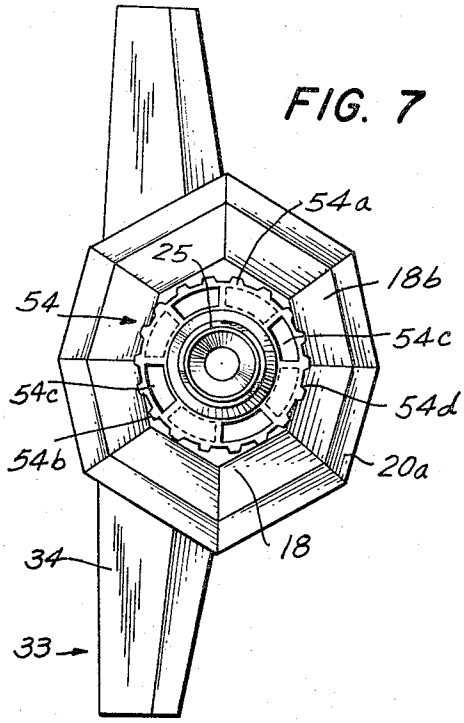

FIG. 8

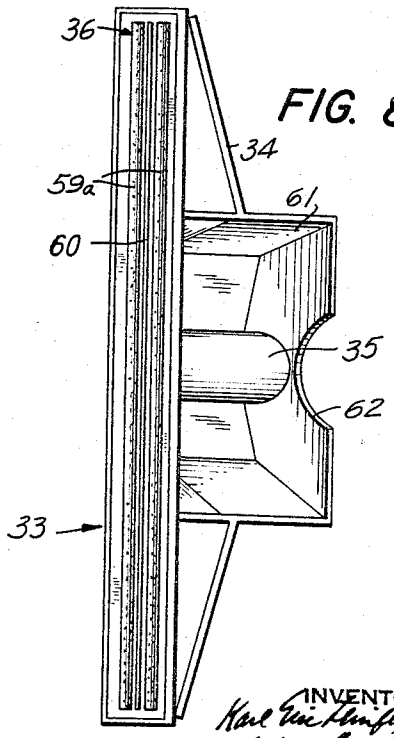

INVENTORS
Karl Erik Leinfelt
BY Johan Arne Danielsson
ATTORNEY

July 25, 1967 K. E. LEINFELT ETAL 3,332,101

SURFACE CLEANING APPARATUS

Filed Aug. 12, 1964 8 Sheets-Sheet 4

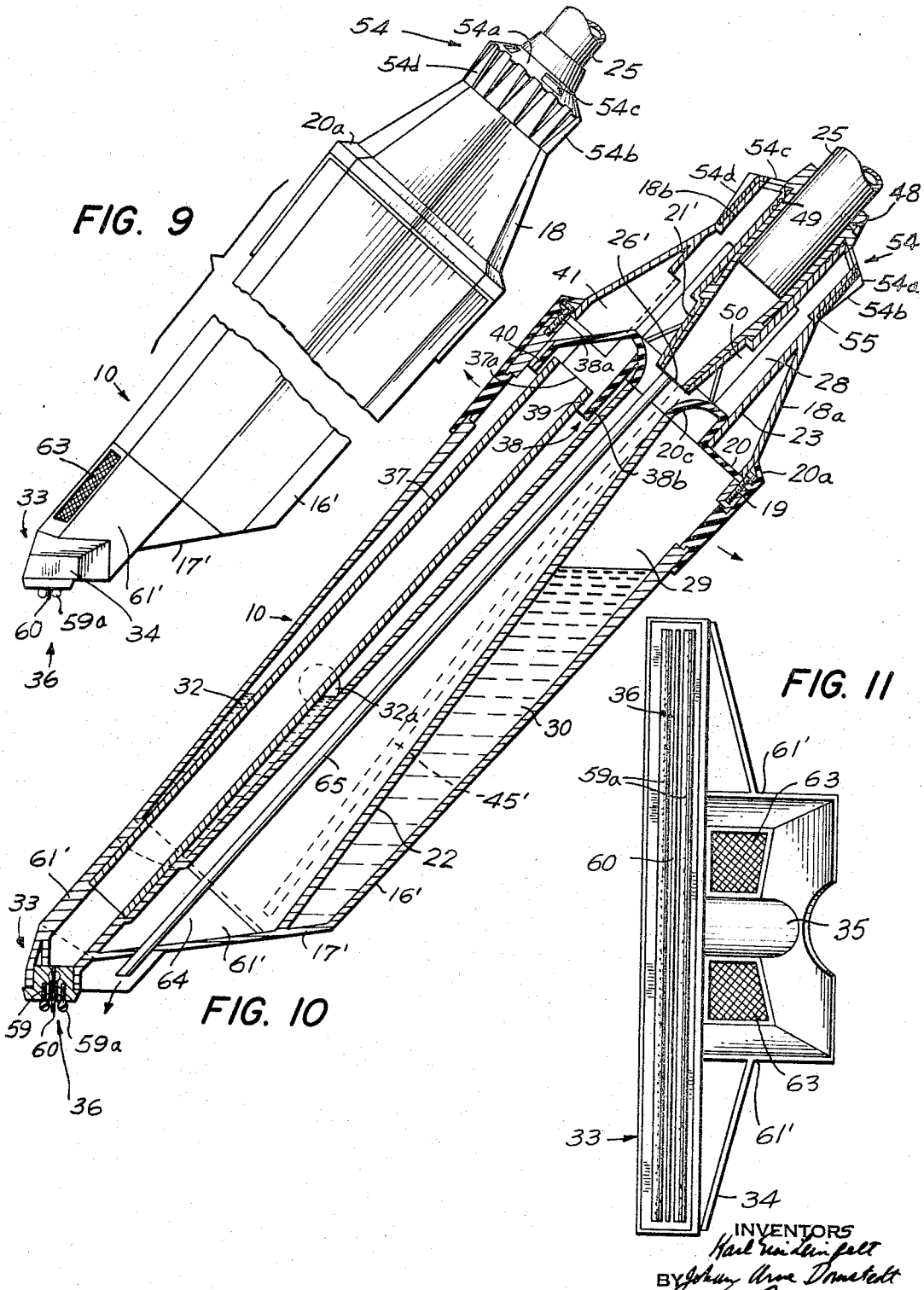

FIG. 9

FIG. 10

FIG. 11

INVENTORS
Karl Erik Leinfelt
BY Johan Arne Domstedt
[signature]
ATTORNEY

July 25, 1967 K. E. LEINFELT ETAL 3,332,101

SURFACE CLEANING APPARATUS

Filed Aug. 12, 1964 8 Sheets-Sheet 5

FIG. 12

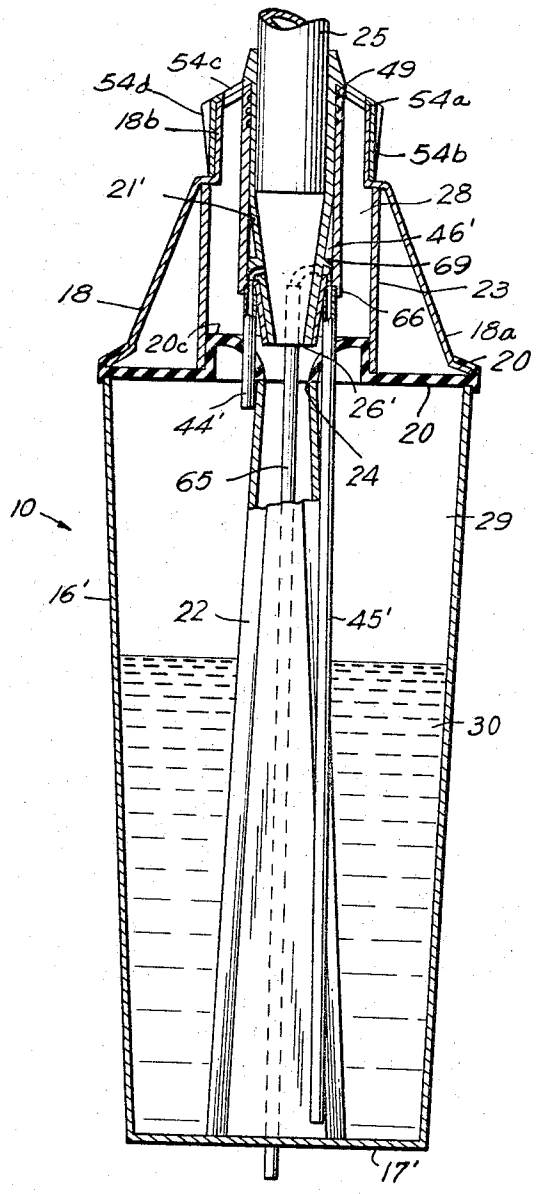

FIG. 13

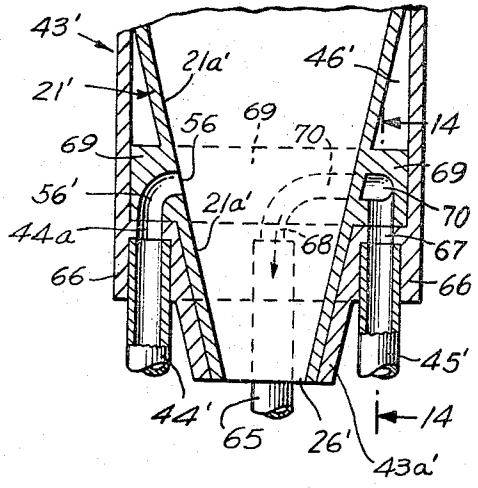

FIG. 14

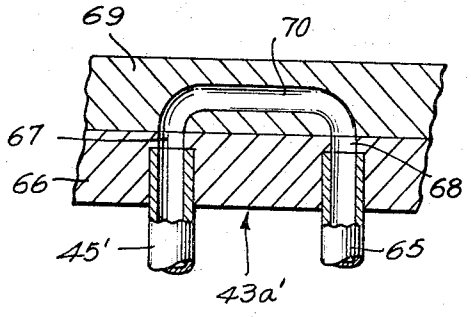

INVENTORS
Karl Erik Leinfelt
BY Johan Arne Donnefelt
Gill Jennings & Every
their ATTORNEY

July 25, 1967 K. E. LEINFELT ETAL 3,332,101

SURFACE CLEANING APPARATUS

Filed Aug. 12, 1964 8 Sheets-Sheet 6

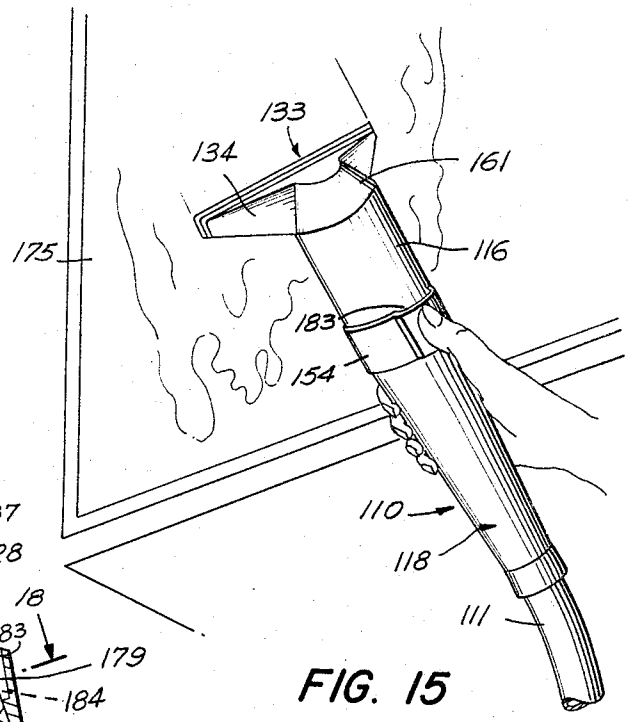

FIG. 15

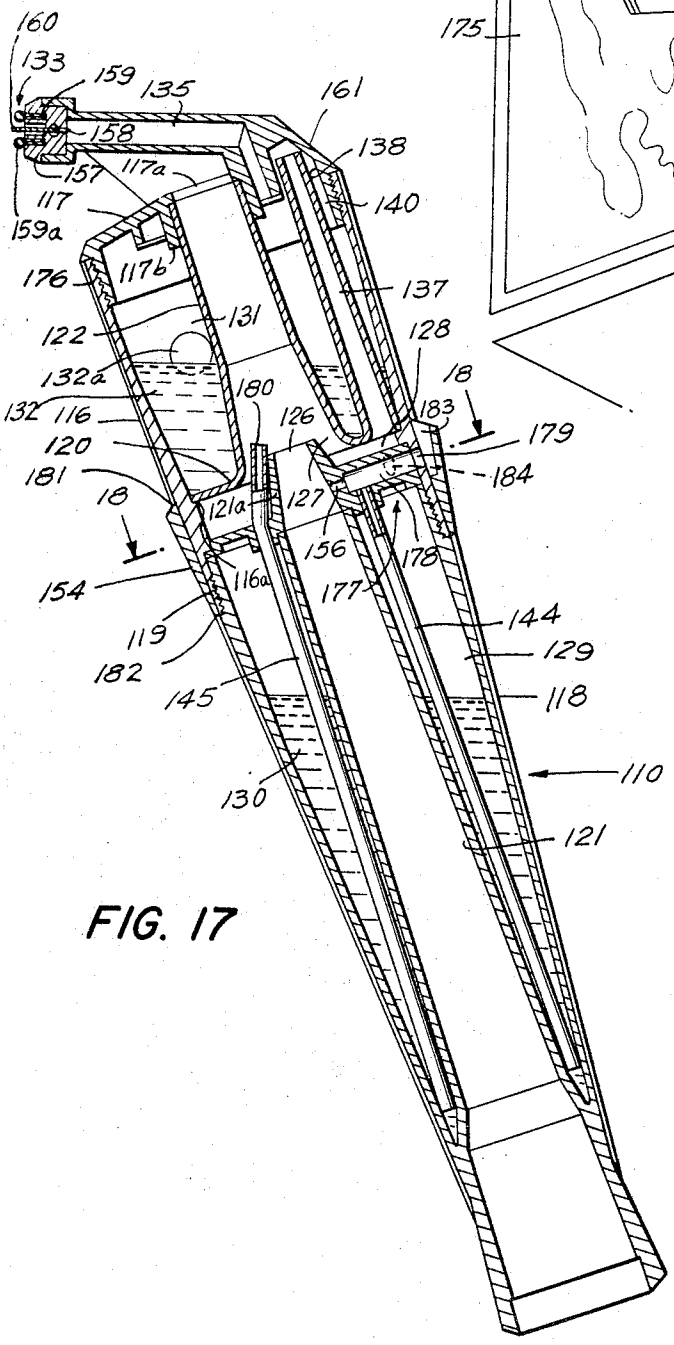

FIG. 17

INVENTORS
Karl Erik Leinfelt
BY Johan Arne Danielsson
Gill Jennings & Every
their ATTORNEY

July 25, 1967 K. E. LEINFELT ETAL 3,332,101

SURFACE CLEANING APPARATUS

Filed Aug. 12, 1964 8 Sheets-Sheet 7

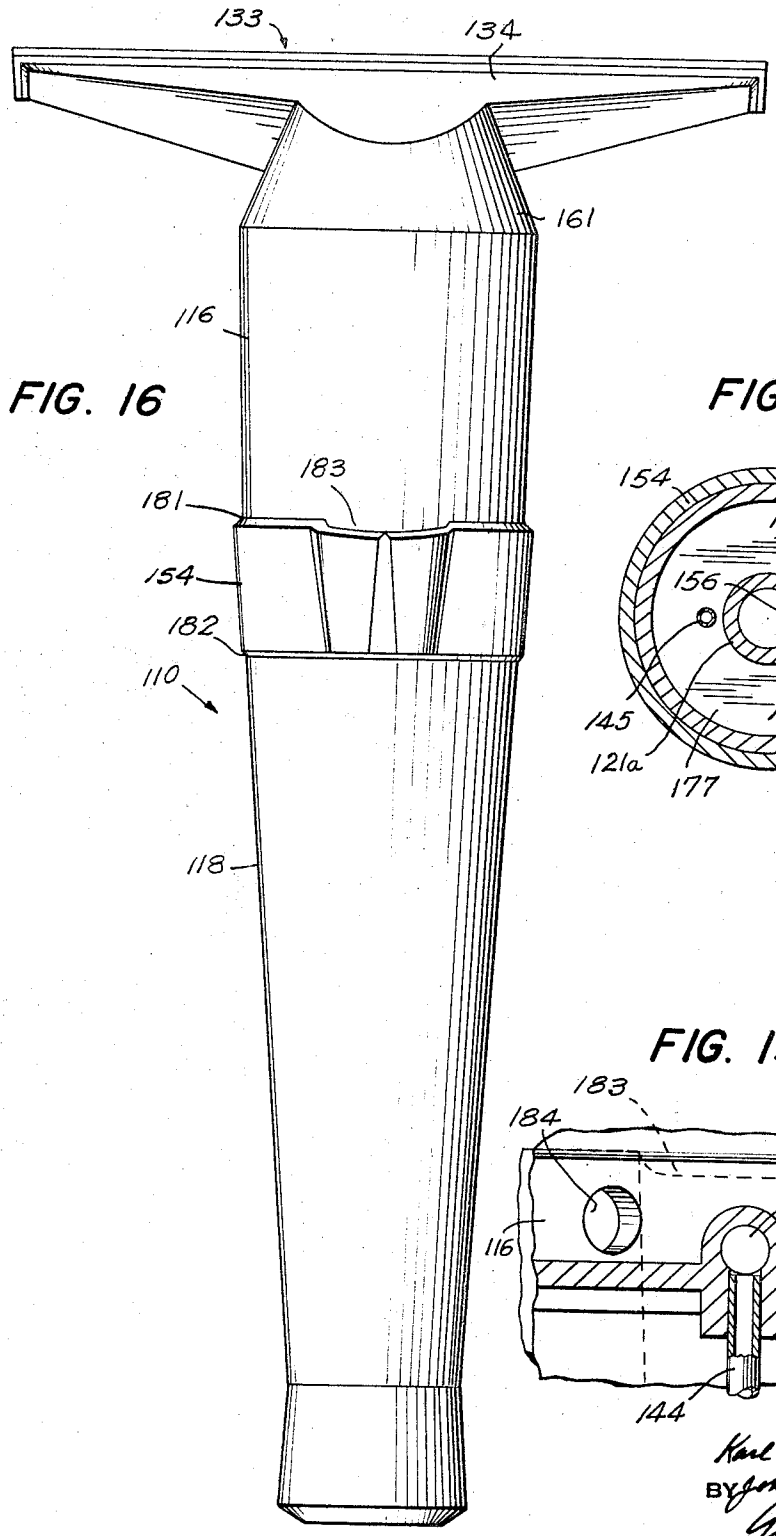

FIG. 16

FIG. 18

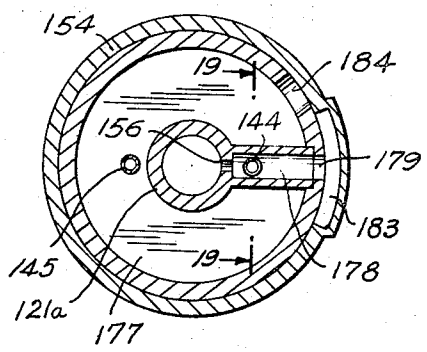

FIG. 19

INVENTORS
Karl Erik Leinfelt
BY Johan Arne Danstedt
ATTORNEY

July 25, 1967 K. E. LEINFELT ETAL 3,332,101

SURFACE CLEANING APPARATUS

Filed Aug. 12, 1964 8 Sheets-Sheet 8

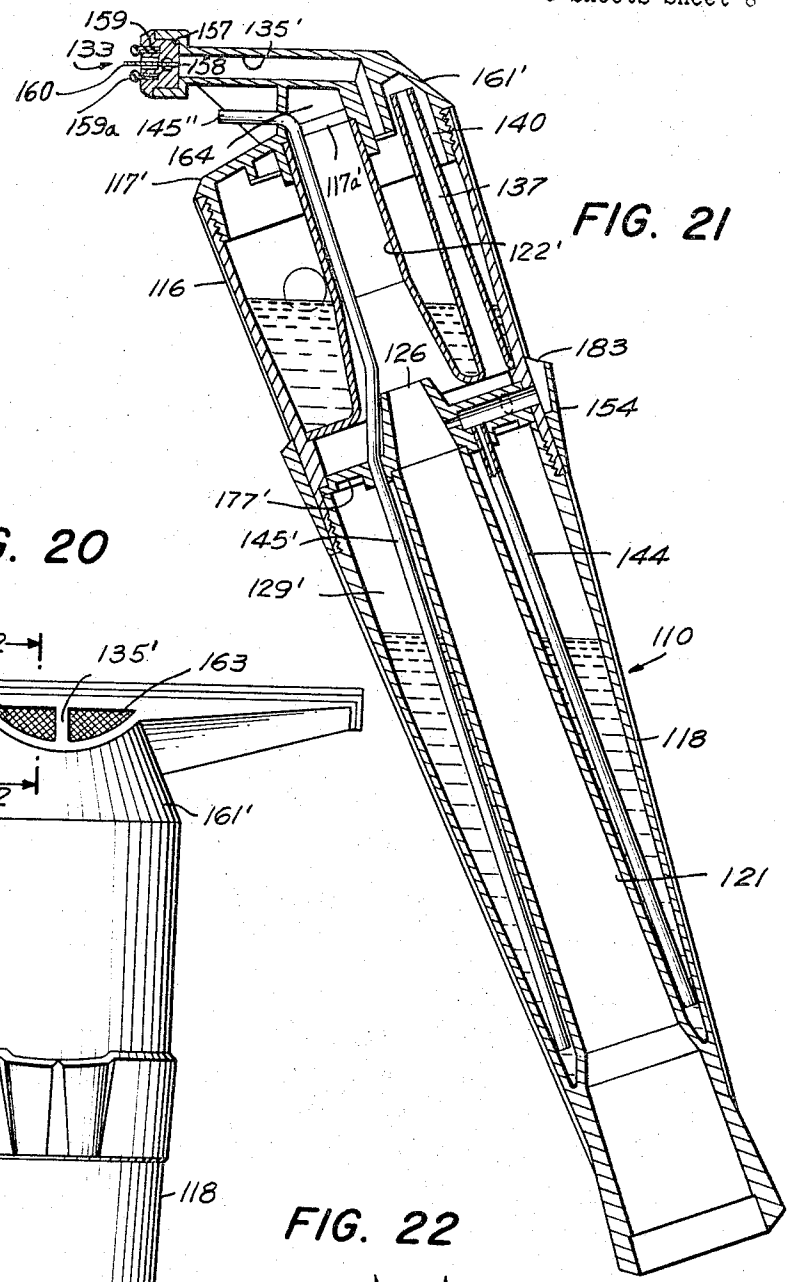

FIG. 21

FIG. 20

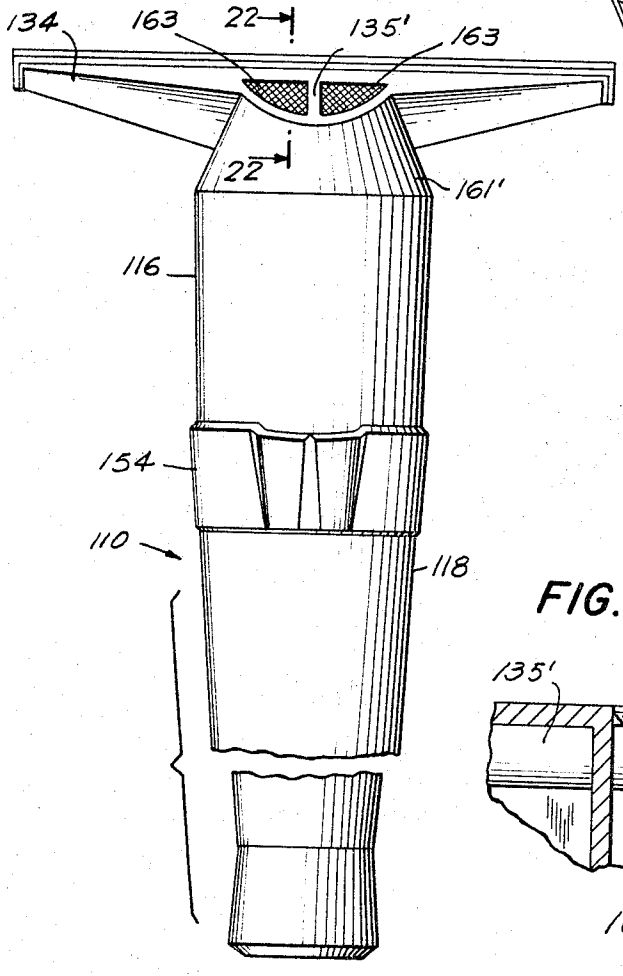

FIG. 22

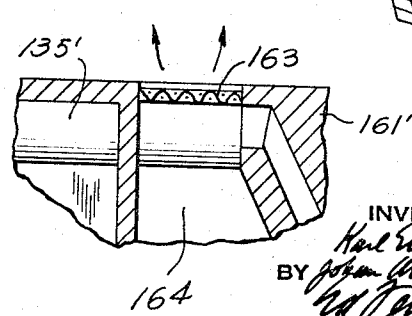

INVENTORS
Karl Erik Leinfelt
BY Johan Arne Domstedt
Ed Fernandes
their ATTORNEY

United States Patent Office 3,332,101 Patented July 25, 1967

3,332,101

SURFACE CLEANING APPARATUS

Karl Eric Leinfelt, Solna, and Johan Arne Domstedt, Hagersten, Sweden, assignors to Aktiebolaget Electrolux, Stockholm, Sweden, a corporation of Sweden

Filed Aug. 12, 1964, Ser. No. 388,999
11 Claims. (Cl. 15—321)

This invention relates to surface cleaning apparatus of the kind employing an air ejector and operable by air supplied thereto under pressure.

It has already been proposed to provide surface cleaning apparatus of this type which is operable to supply liquid cleaning agent from a first receptacle on the apparatus to a surface to be cleaned and to withdraw dirty liquid from the surface and store such liquid in a second receptacle on the apparatus. After the supply of liquid cleaning agent to the surface is discontinued and before liquid is withdrawn from the surface, the apparatus desirably is manipulated over the surface to effect cleaning thereof.

An object of the invention is to provide improved control mechanism for surface cleaning apparatus of this type for regulating the supply of liquid cleaning agent to the surface to be cleaned and the withdrawal of dirty liquid from the surface.

Another object of the invention is to provide an improved control mechanism having a single control member for regulating the supply of liquid cleaning agent to the surface to be cleaned and the withdrawal of dirty liquid from the surface.

A further object of the invention is to provide an improved control mechanism in which the nozzle of the air ejector forms a unitary part of the single control member.

A still further object of the invention is to provide an improved control mechanism in which the nozzle of the air ejector seats and snugly fits within a stationary cylindrical sleeve and functions as a valve sleeve movable about its axis to a number of different operating positions by the single control member.

A still further object of the invention is to provide an improved control mechanism in which liquid cleaning agent from a first receptacle on the surface cleaning apparatus is supplied to the surface to be cleaned with the aid of air under pressure which is diverted from its path of flow in the ejector nozzle.

A still further object of the invention is to provide an improved control mechanism in which dirty liquid is withdrawn from the surface by suction effect resulting from a partial vacuum produced by the air ejector and the magnitude of the partial vacuum is controlled to regulate the withdrawing of the dirty liquid.

A still further object of the invention is to provide an improved surface cleaning apparatus of the above type in which liquid cleaning agent is supplied to a surface to be cleaned from a receptacle in a path of flow which terminates at the vicinity of the discharge orifice of the air ejector nozzle to promote atomization of the liquid in an environment at a partial pressure and entrainment of the liquid in the form of drops in the stream of air discharged from the ejector tube on the surface to be cleaned.

Further objects and advantages of the invention will become apparent as the following description proceeds, and the features of novelty which characterize the invention will be pointed out with particularity in the claims annexed to and forming a part of this specification.

For a better understanding of the invention, reference may be had to the following description taken in connection with the accompanying drawings, in which:

FIG. 1 is a perspective view of surface cleaning apparatus which embodies the invention and a suction cleaner connected to the apparatus for supplying air under pressure thereto;

FIG. 2 is an enlarged side elevational view of the apparatus shown in FIG. 1;

FIG. 3 is a vertical sectional view, taken at line 3—3 of FIG. 4, of the apparatus shown in FIG. 2;

FIG. 4 is a sectional view taken at line 4—4 of FIG. 3;

FIG. 5 is a sectional view taken at line 5—5 of FIG. 3;

FIG. 6 is a vertical sectional view taken at line 6—6 of FIG. 5;

FIG. 7 is a top plan view of the apparatus shown in FIGS. 1 and 2;

FIG. 8 is a fragmentary bottom plan view of the apparatus shown in FIGS. 1, 2 and 3;

FIG. 9 is a side elevational view of surface cleaning apparatus illustrating a modification of the invention;

FIG. 10 is a vertical sectional view of the apparatus shown in FIG. 9;

FIG. 11 is a fragmentary bottom plan view of the apparatus shown in FIGS. 9 and 10;

FIG. 12 is a vertical sectional view, similar to FIG. 6, of the apparatus shown in FIGS. 9 and 10;

FIG. 13 is an enlarged fragmentary sectional view of parts shown in FIG. 12 to illustrate the construction more clearly;

FIG. 14 is a fragmentary sectional view taken at line 14—14 of FIG. 13;

FIG. 15 is a perspective view of surface cleaning apparatus illustrating another modification of the invention;

FIG. 16 is a front elevational view of the apparatus shown in FIG. 15;

FIG. 17 is a vertical sectional view of the apparatus shown in FIGS. 15 and 16;

FIG. 18 is a sectional view taken at line 18—18 of FIG. 17;

FIG. 19 is a fragmentary sectional view taken at line 19—19 of FIG. 18;

FIG. 20 is a front elevational view illustrating a further modification of the invention;

FIG. 21 is a vertical sectional view of the apparatus shown in FIG. 20; and

FIG. 22 is an enlarged fragmentary sectional view taken at line 22—22 of FIG. 20.

Referring to FIG. 1, the surface cleaning unit comprises surface cleaning apparatus **10**, a flexible hose **11** for supplying air under pressure to the apparatus **10**, and a suction cleaner **12** which serves as a source of supply of air delivered under pressure to the hose **11**. The suction cleaner **12** includes a casing **14** having an end cover **15** provided with an outlet **15***a* to which the hose **11** is adapted to be removably secured in any suitable manner (not shown). Air is drawn into the casing **14** through an inlet, which is at the end of the casing opposite the end cover **15**, by a suitable motor-fan unit (not shown) disposed therein. Air discharge under pressure from the outlet **15***a* serves as an excellent source of supply of air under pressure for the surface cleaning apparatus **10**.

In FIGS. 1 to 8 of the drawings, the invention has been shown in connection with surface cleaning apparatus **10** which comprises an elongated multi-sided elongated housing **16** having a bottom end wall **17**, and a top part or cover **18** which is detachably secured at **19**, as by cap screws, for example, to the upper end of the housing **16**. As shown in FIGS. 3 and 6, a sealing member **20** formed of suitable material is interposed between rims of the housing **16** and cover **18** to provide a fluid-tight joint therebetween, the sealing member having a peripheral edge portion **20***a* which extends upward at

the exterior of the cover **18** and conceals the cap screws **19** from view.

An air ejector is provided for the surface cleaning apparatus **10** which includes a nozzle **21** disposed within the cover **18** and a discharge tube **22** in axial alignment therewith. This discharge tube **22** extends lengthwise of the housing **16** from an opening in the bottom end wall **17** to the top edge of the housing. The sealing member **20** forms a partition between the housing **16** and the cover **18** and includes a vertically extending portion **20***b* which snugly fits within a cylindrical sleeve **23** provided in the cover **18** and a curved portion **20***c* which slopes inward and downward therefrom and terminates in a ring-shaped portion at **24** against the upper narrow end of the discharge tube **22**, as best shown in FIG. 6.

Air under pressure flows from the hose **11** into the upper end of the conduit **25** which is carried by the cover **18** in a manner which will be described presently, the air passing from the conduct **25** into the ejector nozzle **21** from which the air is discharged through an opening **26** having a diameter less than that of the ring-shaped portion **24** of the partition **20**.

The air ejector comprising the nozzle **21**, discharge tube **22** and curved portion **20***c* of the partition **20** coacting with the discharge tube produces a partial vacuum which is transmitted through a passage or gap **27** between the nozzle **21** and curved portion **20***c* of the partition **20** to a chamber **28**, the outer wall of which is formed by the cylindrical sleeve **23** and upper part **18***b* of the cover **18**, as shown in FIG. 3.

The space of annular form defined by the housing **16** and the discharge tube **22** extending therethrough is divided by a partition **16***a* to form a first receptacle **29** for holding a body **30** of clean water and a second receptacle **31** for holding a body **32** of dirty water, as best shown in FIGS. 3 and 4.

Under certain operating conditions, as will be described hereinafter, the partial vacuum produced in the chamber **28** is employed to induce flow of air into a nozzle **33** and withdraw water from a surface being cleaned. As best shown in FIGS. 7 and 8, the nozzle **33** comprises an elongated body **34** to an intermediate region of which is connected an upwardly inclined pipe or tubular member **35**. A passage is provided in the body **34** through which air is drawn toward the pipe **35** from the region of an elongated inlet opening **36**.

As shown in FIG. 3, the upper end of the pipe **35** is formed to receive the lower end of a suction tube **37** which is disposed within the receptacle **31** and extends upward therein from an opening in the bottom wall **17** of the housing **16** and terminates at a region **37***a* spaced from the top edge of the housing. An inverted cup-shaped member **38** at the upper end **37***a* of the suction tube **37** functions to separate water from the mixture of water and air drawn upward through the tube **37** from the nozzle **33**. The water separator **38** includes a closed end **38***a* and a hollow sleeve portion **38***b* depending therefrom which is of larger diameter than the tube **37** and is in telescopic relation therewith to form a passage or gap **39** therebetween. Water entrained in air discharged from the upper end of the tube **37** into the water separator **38** flows downward through the gap **39** and collects in the bottom of the dirty water receptacle **31**.

The closed end **38***a* and sleeve portion **38***b* of the water separator may be formed integrally with the sealing member or partition **20** which, at the vicinity of the suction tube **37**, is spaced from the wall of the housing **16** to provide a gap or passage **40** therebetween through which air passing downward from the gap **39** can flow upward into a chamber **41** defined by the cover **18** and cylindrical sleeve **23**. In a manner which will be described hereinafter, air flowing into chamber **41** can pass therefrom into chamber **28** in which a partial vacuum is produced responsive to operation of the air ejector, and the air in chamber **28** moves through the gap **27** and mixes with air discharge from the ejector nozzle **21** and flows through the ejector discharge tube **22** and is discharged from the bottom of the housing against the surface being cleaned.

The housing **16** is formed with openings **29***a* and **31***a* for introducing and removing water or other liquid into and from the upper parts of the receptacles **29** and **31**, respectively. The openings **29***a* and **31***a* are closed by closure members **29***b* and **31***b* which may be resilient in character and formed as flaps which are integral with the sealing member **20** and movable thereon between the solid line and dotted line positions shown in FIG. 3.

One or more anti-foam bodies **32***a* may be placed in the receptacle **31** which are adapted to float on the surface of the body **32** of dirty water therein. The bodies **32***a* employed to inhibit foaming contain a suitable anti-foaming agent, such as cetyl alcohol, for example, which is dispersed in a solid carrier that is soluble in water, the anti-foaming agent being released as the carrier dissolves in the dirty water.

In accordance with the invention, the cleaning apparatus **10** embodies structure for flowing clean water from the receptacle **29** to the surface to be cleaned. In a manner which will be described hereinafter, a part of the air delivered under pressure to the ejector nozzle **21** can be diverted therefrom into a chamber **42** defined by the ejector nozzle and the vertical wall of a sleeve **43**, as shown in FIG. 6. The diverted air under pressure flows downward through a tube **44** into the upper part of the receptacle **29** above the liquid surface level therein and causes liquid to flow therefrom through a vertically extending tube **45** into another chamber **46** defined by the ejector nozzle **21** and the sleeve **43**. Liquid flowing into the chamber **46** can pass therefrom through a passage **47** toward the opening **26** of the ejector nozzle **21** and mix with air discharged therefrom.

Due to the partial vacuum produced in the gap **27**, liquid discharged from the passage **47** into the gap at the discharge opening **26** of the nozzle **21** atomizes and the atomized liquid in the form of liquid drops is entrained in air flowing through the discharge tube **22** to the surface to be cleaned. In this way the air directed against the surface, while the cleaning apparatus **10** is being moved back and forth over an area being cleaned, will deposit a layer of clean water on the surface.

In further accord with the invention, the ejector nozzle **21** functions as a valve for controlling the operation of the cleaning apparatus **10**, the nozzle **21** being rotatable or angularly movable about its longitudinal axis to three operating positions. In the first position of the nozzle **21**, clean water is discharged from the receptacle **29** to the surface to be cleaned in the manner described above. In the second position of the nozzle **21**, the supply of clean water from the receptacle **29** to the surface is discontinued and the cleaning apparatus **10** is manipulated back and forth over the surface to effect cleaning. In the third position of the nozzle **21**, dirty water is removed from the surface and collected in the receptacle **31** in the manner described above.

The ejector nozzle **21** includes a bottom section **21***a* in the form of a truncated cone and a top section **21***b* in the form of a cylindrical tube which is fixed to the conduit or wand **25** in any suitable manner, as by a screw **48**, for example, and is angularly movable or turnable therewith. The ejector nozzle **21** is seated and snugly fits in the hollow sleeve **43** which includes a bottom section **43***a* in the form of a truncated cone and a top section **43***b* in the form of a cylindrical tube. In order to prevent leakage of air between the hollow sleeve **43** and ejector nozzle **21** and secure the latter against axial movement, a packing joint **49** is provided between the top sections **21***b* and **43***b* of the nozzle and hollow sleeve, respectively.

The hollow sleeve **43** forms a stationary part of the cover **18** and is connected by radially extending webs **50**

to the cylindrical sleeve 23 which in turn is connected by radially extending webs 51 to the wider bottom part 18*a* of the cover 18. The upper narrow part 18*b* of the cover 18 and top sleeve section 43*b* are radially spaced from one another and are connected at their upper ends by a transverse wall 52 having openings 53 distributed about the hollow sleeve 43. A control member 54, which is fixed to the top section 21*b* of the ejector nozzle 21 and is angularly movable or turnable therewith, includes a first portion 54*a* which overlies the apertured transverse wall 52 and a second portion 54*b* of tubular form which snugly fits about the upper narrow part 18*b* of the cover 18 and rests against a shoulder 55 at the juncture of the upper and bottom parts 18*b* and 18*a*, respectively, of the cover. The first portion 54*a* of the member 54 is formed with openings 54*c* which can be moved into alignment with the openings 53 in the transverse wall 52 so that chamber 28 will be open to the atmosphere. By turning the control member 54 so that openings 53 in the connecting wall 52 are closed by the first portion 54*a* thereof, the chamber 28 no longer will be open to the atmosphere. The second portion 54*b* of the control member 54 may be serrated at 54*d* to facilitate turning the control member 54 and ejector nozzle 21, as shown in FIGS. 2 and 7.

While the bottom section 43*a* of the hollow sleeve 43 for the greater part defines a truncated cone, as shown in FIG. 3, it will be noted in FIGS. 5 and 6 that regions of the bottom sleeve section 43*a* extend vertically downward for a short distance from the upper section 43*b* to form bulges defining the chambers 42 and 46 to which the upper ends of the tubes 44 and 45, respectively, are connected. The outer surface of the bottom section 21*a* of the ejector nozzle 21 is formed with an axially extending groove defining the passage 47 which, when the nozzle is moved by the control member 54 to its first position explained above, provides a path of flow for clean water from the chamber 46 to the discharge opening 26 of the nozzle at which region clean water is discharged from the passage 47. With the ejector nozzle 21 in its first position, an opening 56 in the wall of the bottom section 21*a* thereof is directly opposite the chamber 42, whereby a part of the air delivered under pressure to the nozzle is diverted into the chamber 42 and flows through the tube 44 into the upper part of the receptacle 29 to force clean water upward through the tube 45 to the chamber 46.

When the ejector nozzle 21 is in its first position, the openings 54*c* in the member 54 are in alignment with the openings 53 in the top connecting wall 52 of the cover 18 and the chamber 28 will be open to the atmosphere. Under these operating conditions, secondary air will be drawn from the atmosphere through the openings 53 into the chamber 28 and the partial vacuum produced therein by ejector action, as explained above, will be reduced sufficiently to render the cleaning apparatus 10 ineffective to withdraw water from the surface to be cleaned.

When the control member 54 is turned to move the ejector nozzle 21 to the second position described above, the opening 56 in the bottom section 21*a* of the nozzle will be shifted from a position opposite the chamber 42 to a region opposite an imperforate part of the bottom sleeve section 43*a* and air under pressure no longer will be diverted from the nozzle 21 into the chamber 42. When the ejector nozzle 21 is moved to its second position, the groove 47 in the outer surface thereof will be shifted from a position opposite the chamber 46 to a region opposite an imperforate part of the lower sleeve section. Hence, in the second position of the nozzle 21 clean water no longer will be supplied from the receptacle 29 to the surface to be cleaned. However, the openings 54*c* in the member 54 will remain in alignment with the openings 52 of the cover 18 in the second position of the nozzle 21 and secondary air will continue to be drawn from the atmosphere into the chamber 28, so that the partial vacuum therein will be reduced sufficiently to render the cleaning apparatus 10 ineffective to withdraw water from the surface to be cleaned. Under these operating conditions, the cleaning apparatus 10 can be manipulated over the surface to effect cleaning.

In the third position of the nozzle 21, the opening 56 and groove 47 in the lower nozzle section 21*a* are out of communication with the chambers 42 and 46, respectively, and clean water will not be supplied from the receptacle 29 to the surface. However, movement of the nozzle 21 to its third position by the control member 54 renders the latter operable to close the openings 52 in the cover 18 so that the chamber 28 no longer will be open to the atmosphere. Under these operating conditions, the air delivered under pressure to the nozzle 21 will render the cleaning apparatus 10 operable to produce a partial vacuum in chamber 28 sufficiently high to induce flow of air into the nozzle 33 and withdraw dirty water from the surface, as explained above. After the dirty water is separated from the air and collects in the receptacle 31, the air from which water has been separated flows through the gap 40 into chamber 41. As seen in FIGS. 3 and 5, the cylindrical sleeve 23 is formed with an opening 23*a* so the air drawn into chamber 41, which is defined in part by a pair of webs 51 at opposing vertical edges of the opening 23*a*, can pass into the chamber 28. It will be understood that the webs 50 extend axially of the bottom sleeve section 43*a* from the shoulder 55 to the highest part of the curved portion 20*c* of the sealing member or partition 20. Accordingly, air can readily flow from the chamber 41 into the chamber 28 and pass from the lower end thereof into the gap 27. Also, atmospheric air drawn through the openings 52 in the cover 18 can readily flow lengthwise through the chamber 28 toward the gap 27, as shown in FIG. 6.

The suction nozzle 33 comprises the body 34 having a bottom opening arranged to receive an insert 57 having a vertical slot 58 therein, the part of the slot removed from the air inlet 36 being narrow and the part thereof adjacent to the air inlet being wide. Two members 59 formed of porous resilient material, such as cellular plastic, for example, are anchored in any suitable manner in the wide part of the slot 58 at opposite sides of a plane passing through the narrow part of the slot. The members 59 project downward beyond the bottom surface of the insert 57 and are formed with lips 59*a* which are circular in cross-section and adapted to contact the surface to be cleaned. An essentially flat flap 60 is mounted for movement within the insert 57 between the members 59. The flap 60 is flexible and formed of resilient material, such as rubber, for example, and the outer free edge thereof projects slightly beyond the lips 59*a* of the members 59.

When the surface cleaning apparatus 10 is being moved back and forth on the surface to be cleaned, the flexible flap 60 positions itself adjacent the lip 59*a* at the air inlet 36 which, when the nozzle 33 is being moved in a given direction, is at the rear part of the nozzle body 34. In this way water accumulates ahead of and in front of the flexible flap and in vertical alignment with the slot 58. Air drawn in the inlet 36 by the suction effect produced by the air ejector 21–22 picks up drops of the accumulated water and the water entrained in the air flows upward through the suction tube 37 and water separator 38 into the receptacle 31. The porous elastic members 59 also pick up water from the surface regions with which they come in contact to prevent dirt streaks forming and promote effective cleaning of the surface. The air discharged from the ejector tube 22 toward the surface to be cleaned also promotes drying of the damp surface after removal of water therefrom.

The body 34 of the suction nozzle 33 is provided with a hood 61 which extends upward therefrom to the bottom 17 of the housing 16 and is fixed thereto in any suitable manner. The hood 61, which conceals the pipe 35 from view, is multisided with the four sides thereof serving as the extensions of the four front sides of the housing 16. As shown in FIG. 8, the part of the hood 61 abutting the

bottom wall 17 of the housing 16 is recessed at 62 so that an unobstructed path of flow will be provided for air which is discharged from the lower end of the ejector tube 22 toward the surface to be cleaned, such air being directed to the surface at a region closely adjacent to the suction nozzle 33.

A modification of the invention is illustrated in FIGS. 9 to 14 which is generally like the embodiment shown in FIG. 1 to 8 and just described and in which similar parts are referred to by the same reference numerals. The modification of FIGS. 9 to 14 differs from the embodiment first described in that adjacent sides at the front of the hood 61', which extend upward from the suction nozzle body 34, are formed with large openings covered by screens 63, as shown in FIGS. 9 and 11. As shown in FIG. 10, bottom wall 17' of the housing 16' and the hood 61' cooperate to define a passage 64 through which air flows from the lower discharge end of the ejector tube 22 to the screens 63. With this arrangement air discharged from the air ejector tube 22 flows upward from the screens 63 which are disposed above the suction nozzle 33. Therefore, in the modification of FIGS. 9 to 14, the air flowing from the ejector tube 22 is directed upward from the surface to be cleaned and not toward the surface.

The modification of FIGS. 9 to 14 differs in another respect from the first-described embodiment in that clean water forced upward through tube 45' is delivered through a tube 65 to the surface to be cleaned. As shown in FIGS. 10 and 12, the tube 65 extends lengthwise of and within the ejector tube 22 and projects downward through an opening in the bottom wall 17' of the housing 16' and terminates at a region immediately behind the suction nozzle 33.

The upper part of the tube 65 is bent and extends upward from the discharge opening 26' of the ejector nozzle 21' along the outer wall surface of the bottom sleeve section 43*a* in which the ejector nozzle 21' is rotatable. The bottom sleeve section 43*a*' is formed with a boss 66 having a pair of vertical openings 67 and 68 therein, the lower ends of which receive the tubes 45' and 65, respectively, as best shown in FIGS. 13 and 14. The upper ends of the openings 67 and 68 are in communication with the chamber 46' which is of annular form and disposed about the bottom section 21*a*' of the ejector nozzle 21'. A flange 69 is formed integrally with the ejector nozzle 21' and projects radially outward therefrom into the chamber 46'. The flange 69 essentially forms a projecting part at one region of which is formed an inverted U-shaped passage 70. When the control member 54 is turned to move the nozzle 21' to its first position to render the surface cleaning apparatus operable to supply clean water from the receptacle 29 to the surface to be cleaned, the ejector nozzle 21' is moved to the position shown in FIG. 14 in which the vertical legs of the inverted U-shaped passage 70 are in communication with the openings 67 and 68. Under these operating conditions, clean water forced upward through the tube 45' flows through inverted U-shaped passage 70 into tube 65 from which it is discharged at its lower end on the suface to be cleaned. When the U-shaped passage 70 is in communication with the openings 67 and 68, another passage 56' in flange 69 is in the position shown in FIG. 13. The upper end of the passage 56' terminates at an opening 56 at the inside wall surface of the ejector nozzle 21' and the lower end thereof is in communication with a vertical opening 44*a* in the boss 66 which receives the upper end of the tube 44'. Hence, the opening 56 in ejector nozzle 21' will be in communication with tube 44' to permit air diverted through the passage 56' to flow through tube 44' to receptacle 29.

When the control member 54 is turned to move the nozzle 21' to its second and third positions explained above, clean water from the receptacle 29 will not be delivered to the surface to be cleaned. Under these operating conditions, the inverted U-shaped passage 70 will be shifted angularly with respect to the boss 66 and imperforate regions of the flange 69 will bear against the upper ends of the openings 67 and 68 in the boss 66. Also, the passage 56' will be shifted angularly with respect to the boss 66 and an imperforate region of the flange 69 will bear against the upper end of the opening 44*a*. In other respects, the operation of the modification of FIGS. 9 to 14 is the same as that of the first embodiment and will not be repeated here.

Another modification of the invention is shown in FIGS. 15 to 19 which is particularly useful for cleaning a variety of surfaces, such as glass windows, for example. FIG. 15 illustrates a surface cleaning apparatus 110 employed to clean a window 175 and to which air under pressure is supplied through a flexible hose 111 from a suitable source of supply like a suction cleaner, for example. The surface cleaning apparatus 110 comprises an elongated housing having sections 116 and 118 threadedly connected together at 119.

An air ejector is provided for the surface cleaning apparatus 110 which includes a nozzle 121 disposed within the housing section 118 and a discharge tube 122 in axial alignment therewith which is disposed within the housing section 116. The housing section 116 is provided with an end cover 117 which is threadedly connected thereto at 176. The end cover 117 is formed with an opening 117*a* and a tubular member 117*b* extending inward therefrom in which one end of the discharge tube 122 is anchored. The opposite end of the discharge tube 122 is formed to provide a wall member 120 which is anchored against an internal shoulder 116*a* of the housing section 116.

When the parts thus far described are assembled and connected to one another, a partition 177 is clamped between the housing sections 116 and 118. The partition 177 includes a centrally disposed hollow truncated cone 121*a* which is in axial alignment with the ejector nozzle 121 and functions as a tip therefor having a discharge orifice 126.

The annular space between the ejector nozzle 121 and housing section 118 defines a first receptacle 129 for holding a body 130 of clean water, and the annular space between the discharge tube 122 and the housing section 116 defines a receptacle 131 for holding a body 132 of dirty water. The cover 117 and housing sections 116 and 118 can be disconnected from one another to introduce clean water into the receptacle 129 and remove dirty water from the receptacle 131. One or more anti-foam bodies 132*a*, which are similar to the anti-foam bodies 32*a* in the first-described embodiment and adapted to float on the surface of the body of dirty water, may be placed in the receptacle 131.

The air ejector comprising the nozzle 121, discharge tube 122 and member 120 coacting with the latter produces a partial vacuum which is transmitted through a gap 127 to a space 128 disposed about the nozzle tip 121*a*. Under certain operating conditions, as will be pointed out hereinafter, the partial vacuum produced in the space 128 is employed to induce flow of air into a nozzle 133 and withdraw water from the surface to be cleaned. The nozzle 133 comprises an elongated body 134 to an intermediate region of which is connected a pipe 135. The construction of the nozzle 133 may be like the nozzle 33 shown in the first embodiment and described above and include an insert 157 having a slot 158 having narrow and wider parts, and porous members 159 in the wider part of the slot at opposite sides of a plane passing through the narrow part of the slot. Further, the porous elastic members 159 may be formed with lips 159*a* and a flexible flap 160 disposed therebetween. It will be understood that the operation and function of the nozzle 133 is the same as that of the nozzle 33 and will not be repeated here.

As shown in FIG. 16, the nozzle 133 is provided with a hood 161 which is similar to the hood 61 in the first-described embodiment. The hood 161 conceals the pipe 135 from view and is fixed to the housing section 116 in any suitable manner.

The pipe **135** may be formed integrally with the cover **117** for flowing air and entrained water into the receptacle **131** for holding dirty water. The inside of the cover **117** is provided with a cup-shaped recess **138** into which extends one end of a suction tube **137**. The recess **138** and tube **137** function as a water separator. Air from which water has been separated flows through a gap **140** between the tube **137** and the wall of the recess **138** into the upper end of the tube **137** which extends downward through the receptacle **131**, the lower end of the tube terminating at the space **128**. Air flowing into the space **128** from the tube **137** moves into the gap **127** and mixes with air discharged from the ejector nozzle **121** and flows through the ejector tube **122** and is discharged at **117***a* on the surface to be cleaned.

In accord with the invention, the modification of FIGS. 15 to 19 embodies structure for flowing clean water from the receptacle **129** to the surface to be cleaned. In a manner which will be described presently, a part of the air delivered to the ejector nozzle **121** can be diverted therefrom through an opening **156** in the wall of the tip **121***a* into a passage **178** which is formd in the partition **177** and extends radially outward from the nozzle tip **121***a* and terminates at an opening **179** at the periphery of the partition. The diverted air under pressure flows downward from the passage **178** through a tube **144** which extends axially of the housing section **118** and terminates at a level above the bottom of the clean water receptacle **129**. This causes clean water to flow upward from the receptacle through a tube **145** which extends through an opening in the partition **177** and terminates at **180** at the vicinity of the discharge opening **126** of the ejector nozzle **121**. Due to the partial vacuum produced in the gap **127**, liquid discharged at **180** from tube **145** atomizes and the atomized liquid in the form of drops is entrained in air flowing through the discharge tube **122** toward the surface to be cleaned.

In further accord with the invention, a control member **154** is provided which is movable to three different positions for respectively rendering the surface cleaning apparatus **110** operable to supply clean water from the receptacle **129** to the surface to be cleaned, to stop the supply of clean water to the surface and effect cleaning of the surface by manipulating the cleaning apparatus on the surface, and thereafter to remove dirty water from the surface and collect it in the receptacle **131**. The control member or collar **154** is of annular form and rotatable about the housing sections **116** and **118** at the vicinity of the partition **177**. As best shown in FIG. 17, the control member **154** is anchored between external shoulders **181** and **182** of the housing to prevent axial movement thereof while permitting it to be turned or rotated about its axis.

The control member **154** is formed with a cavity or recess **183** at a peripheral zone thereof which is open at the top and extends downward to a level below the opening **179** of the passage **178**. When the control member **154** is turned about its axis, the cavity **183** may be positioned opposite the opening **179**, whereby the passage **178** will be open to the atmosphere. Similarly, the control member **154** can be turned about its axis to position the cavity **183** opposite an opening or vent **184** in the bottom part of the housing section **116**. As shown in FIG. 19, the vent **184** is located at the same level as the opening **179**. When the cavity **183** of the control member **154** is opposite the vent opening **184**, the space **128** is open to the atmosphere.

When the control member **154**, which functions as a sleeve valve, is in its first position, the opening **179** will be closed by a part of the member **154** angularly offset from the cavity **183** and the cavity is opposite the vent **184** in the housing section **116**, so that space **128** will be open to the atmosphere. Under these conditions, secondary air will be drawn from the atmosphere through the opening **184** into the space **128** and the partial vacuum produced therein will be reduced sufficiently to render the cleaning apparatus **110** ineffective to withdraw water from the surface to be cleaned.

With opening **179** closed by the control member **154**, the part of the air diverted from the nozzle **121** through the opening **156** therein into the passage **178** will be effective to supply clean water from the receptacle **129** to the surface to be cleaned in the manner described. This is so for the reason that, since the opening **179** of the passage **178** is closed, the diverted air under pressure will flow downward in the tube **144** and force clean water in the receptacle **129** to flow through the tube **145**.

When the control member **154** is turned to its second position, both the openings **179** and **184** will be opposite the cavity **183**, so that both the space **128** and passage **178** will be open to the atmosphere. Under these operating conditions, the partial vacuum in the space **128** will continue to remain sufficiently reduced to render the cleaning apparatus **110** ineffective to withdraw water from the surface to be cleaned. Since the passage **178** is open to the atmosphere, air diverted from the nozzle **121***a* through the opening **156** into the passage **178** will be discharged from the opening or vent **179** into the atmosphere and the cleaning apparatus will be rendered inoperable to supply clean water from the receptacle **129** to the surface to be cleaned. Under these operating conditions, the cleaning apparatus **110** can be manipulated over the surface to effect cleaning.

In the third position of the control member **154**, the opening or vent **179** of the passage **178** will be opposite the cavity **183** and open to the atmosphere and the cleaning apparatus will remain inoperable to supply clean water from the receptacle **129** to the surface to be cleaned, as explained above. However, in its third position, a part of the member **154** angularly offset from the cavity **183** will close the opening **184**, so that the space **128** no longer will be open to the atmosphere. Under these operating conditions, the ejector nozzle **121–122** will be operable to produce a partial vacuum in the space **128** sufficiently high to induce flow of air into the nozzle **133** and withdraw dirty water from the surface to be cleaned, as explained above in describing the operation of the embodiment shown in FIGS. 1 to 8.

A further modification of the invention is illustrated in FIGS. 20 to 22 which is generally like the modification shown in FIGS. 15 to 19 and just described and in which similar parts are referred to by the same reference numerals. The modification of FIGS. 20 to 22 differs from the embodiment of FIGS. 15 to 19 in that the front of hood **161'** for the nozzle **133** is formed with an opening covered by screens **163**, as shown in FIG. 20. As shown in FIGS. 21 and 22, the end cover **117'** and hood **161'** are formed to define a passage **164** through which air flows from the discharge end **117***a'* of the discharge tube **122'** to the screens **163**, the air passing about the pipe **135'** which extends through the passage **164**. With this arrangement, air discharged from the air ejector tube **122'** passes over the nozzle **133** in a direction from the surface to be cleaned and not toward the surface, as in the modification of FIGS. 15 to 19.

The modification of FIGS. 20 to 22 differs in another respect from the embodiment of FIGS. 15 to 19 in that clean water forced from the clean water receptacle **129'** flows therefrom through a tube **145'** which passes through an opening in the partition **177'** and extends lengthwise within the ejector tube **122'**. The tube **145'** includes an end portion **145''** which extends beyond the discharge opening **117***a'* of the tube **122'** and is substantially parallel to the pipe **135'**, so that clean water will be supplied to the surface to be cleaned at the vicinity of the nozzle **133**.

While particular embodiments of the invention have been shown and described, such variations and modifications are contemplated as fall within the true spirit and

scope of the invention, as pointed out in the following claims.

What is claimed is:

1. Surface cleaning apparatus comprising a housing having a pair of receptacles for liquid, a suction nozzle, surface contacting means carried by said suction nozzle and movable over a surface, air ejector means comprising an air ejector nozzle, a discharge tube in axial alignment with said ejector nozzle and a space maintained at a partial vacuum, a fluid line comprising piping and one of said receptacles having one end in communication with said suction nozzle and the opposite end in communication with said space, said space having a vent, means connected to said ejector nozzle for delivering thereto air under pressure from a source of supply, means comprising tubing in communication with the other of said receptacles for conducting liquid therefrom to the surface at a region thereof adjacent to said suction nozzle, means communicating with the interior of said ejector nozzle for inducing flow of liquid in said liquid conducting means, and control mechanism comprising structure movable to close and open said vent to regulate the magnitude of the partial vacuum in said space and to control said flow inducing means to regulate flow of liquid in said liquid conducting means, said control mechanism having at least two operating positions in one of which said mechanism functions to render said structure operable to open said vent and to render said flow inducing means operable to effect flow of liquid in said liquid conducting means and in the other of which said mechanism functions to render said structure operable to close said vent and to render said flow inducing means inoperable to effect flow of liquid in said liquid conducting means.

2. Apparatus as set forth in claim 1 in which said control mechanism has a third operating position in which said mechanism functions to render said structure operable to open said vent and to render said flow inducing means inoperable to effect flow of liquid in said liquid conducting means.

3. Surface cleaning apparatus comprising a housing having a pair of receptacles for liquid, a suction nozzle, surface contacting means carried by said suction nozzle and movable on a surface, air ejector means comprising an air ejector nozzle, a discharge tube in axial alignment with said ejector nozzle and a space maintained at a partial vacuum, a fluid line comprising piping and one of said receptacles having one end in communication with said suction nozzle and the opposite end in communication with said space, said space having a vent, a source of supply of air under pressure, means connecting the source of air supply to said air ejector nozzle for delivering thereto air under pressure, means comprising tubing in communication with the other of said receptacles for conducting liquid therefrom to the surface at a region thereof adjacent to said suction nozzle, means responsive to air under pressure from said source of supply for inducing flow of liquid in said liquid conducting means, and control mechanism comprising structure movable to close and open said vent to regulate the magnitude of the partial vacuum in said space and to control said flow inducing means to regulate flow of liquid in said liquid conducting means, said control mechanism having at least two operating positions in one of which said mechanism functions to render said structure operable to open said vent and to render said flow inducing means operable to effect flow of liquid in said liquid conducting means and in the other of which said mechanism functions to render said structure operable to close said vent and to render said flow inducing means inoperable to effect flow of liquid in said liquid conducting means.

4. Surface cleaning apparatus as set forth in claim 3 in which said means for inducing flow of liquid in said liquid conducting means comprises a gaseous fluid line having one end connected to receive air under pressure from said source of supply and the other end in communication with the other of said receptacles.

5. Surface cleaning apparatus as set forth in claim 4 in which said structure of said control mechanism includes valve means for controlling flow of air under pressure in said gaseous fluid line, said valve means being open in said one operating position of said control mechanism and closed in said other operating position of said control mechanism.

6. Surface cleaning apparatus as set forth in claim 4 in which said gasoline fluid line intermediate the ends thereof has a vent and said structure of said control mechanism includes a part movable to close and open said vent in said gaseous fluid line for controlling flow of air under pressure in said gaseous fluid line to said other receptacle, said part closing said vent in said gaseous fluid line in said one operating position of said control mechanism and said part opening said vent in said gaseous fluid line in said other operating position of said control mechanism.

7. Surface cleaning apparatus comprising a housing having a pair of receptacles for liquid, a suction nozzle, surface contacting means carried by said suction nozzle and movable over a surface, air ejector means comprising an air ejector nozzle, a discharge tube in axial alignment with said ejector nozzle and a space maintained at a partial vacuum, a fluid line comprising piping and one of said receptacles having one end in communication with said suction nozzle and the opposite end in communication with said space, said space having a vent, means connected to said ejector nozzle for delivering thereto air under pressure from a source of supply, means in communication with the other of said receptacles for conducting liquid therefrom to the surface at a region thereof adjacent to said suction nozzle, a connection for effecting flow of liquid in said liquid conducting means by air under pressure from said source of supply, said connection including valve means movable to open and closed positions for controlling flow of air under pressure from said source of supply to said liquid conducting means, and control mechanism comprising structure movable to close and open said vent to regulate the magnitude of the partial vacuum in said space and to move said valve means to its open and closed positions, said control mechanism comprising a single manually movable member of annular form which is rotatable about its axis and has at least two operating positions which are angularly offset with respect to one another and in one of which said mechanism functions to render said structure operable to open said vent and move said valve means to one of its positions for effecting flow of liquid in said liquid conducting means and in the other of which said mechanism functions to render said structure operable to close said vent and move said valve means to the other of its positions for stopping flow of liquid in said liquid conducting means.

8. Surface cleaning apparatus as set forth in claim 7 in which said manually movable member in said one of its operating positions functions to render said structure operable to open said vent and move said valve means to its open position for effecting flow of liquid in said liquid conducting means and in said other of which said mechanism functions to render said structure operable to close said vent and move said valve means to its closed position for stopping flow of liquid in said liquid conducting means.

9. Surface cleaning apparatus as set forth in claim 7 in which said manually movable member in said one of its operating positions functions to render said structure operable to open said vent and move said valve means to its closed position for effecting flow of liquid in said liquid conducting means and in said other of which said mechanism functions to render said structure operable

to close said vent and move said valve means to its open position for stopping flow of liquid in said liquid conducting means.

10. Apparatus as set forth in claim **3** in which said control mechanism has a third operating position in which said mechanism functions to render said structure operable to open said vent and to render said flow inducing means inoperable to effect flow of liquid in said liquid conducting means.

11. Surface cleaning apparatus as set forth in claim **7** in which said single manually movable member has a third operating position which is angularly offset with respect to said two operating positions and in which said mechanism functions to render said structure operable to open said vent and move said valve means to the other of its positions for stopping flow of liquid in said liquid conducting means.

References Cited

UNITED STATES PATENTS

928,982	7/1909	Kindel	15—369
2,624,622	1/1953	Holte	239—343
2,631,326	3/1953	Smith	15—369 X
2,735,125	2/1956	Erbs	15—320 X
2,854,686	10/1958	Hansen	15—323 X
2,891,913	6/1959	Welford	239—311 X
3,048,876	8/1962	Kemnitz	15—321
3,079,626	3/1963	Yonkers et al.	15—353 X
3,120,676	2/1964	Ballantyne	15—533 X

FOREIGN PATENTS

963,705	1/1950	France.
629,005	9/1949	Great Britain.

ROBERT W. MICHELL, *Primary Examiner.*