Aug. 3, 1937. A. J. FAUSEK ET AL 2,088,695

CUTTING MACHINE

Filed Nov. 29, 1935 2 Sheets-Sheet 1

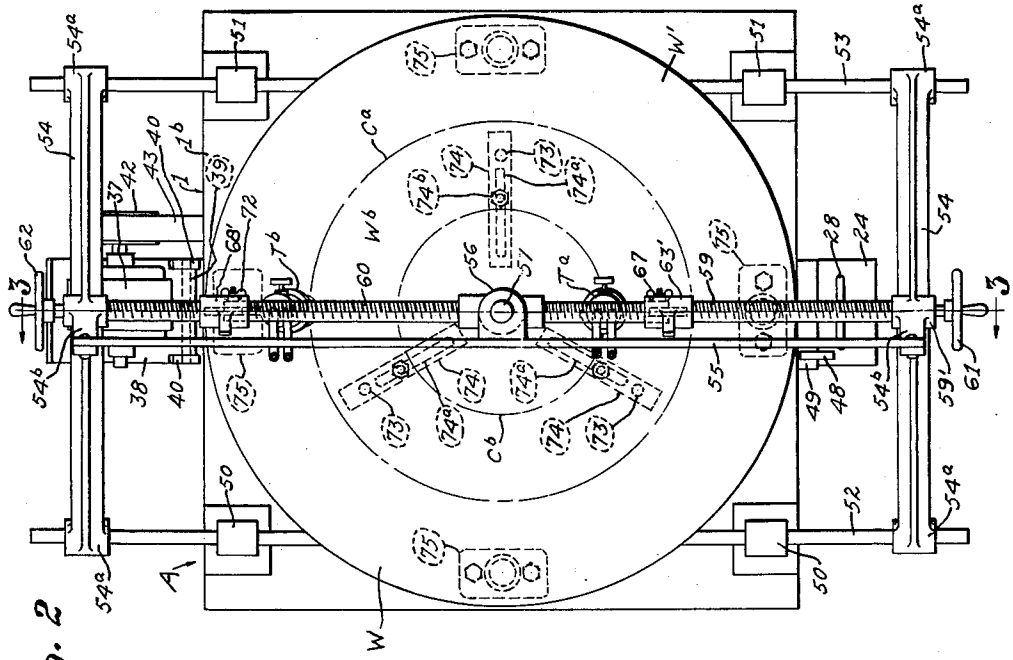

Fig. 2

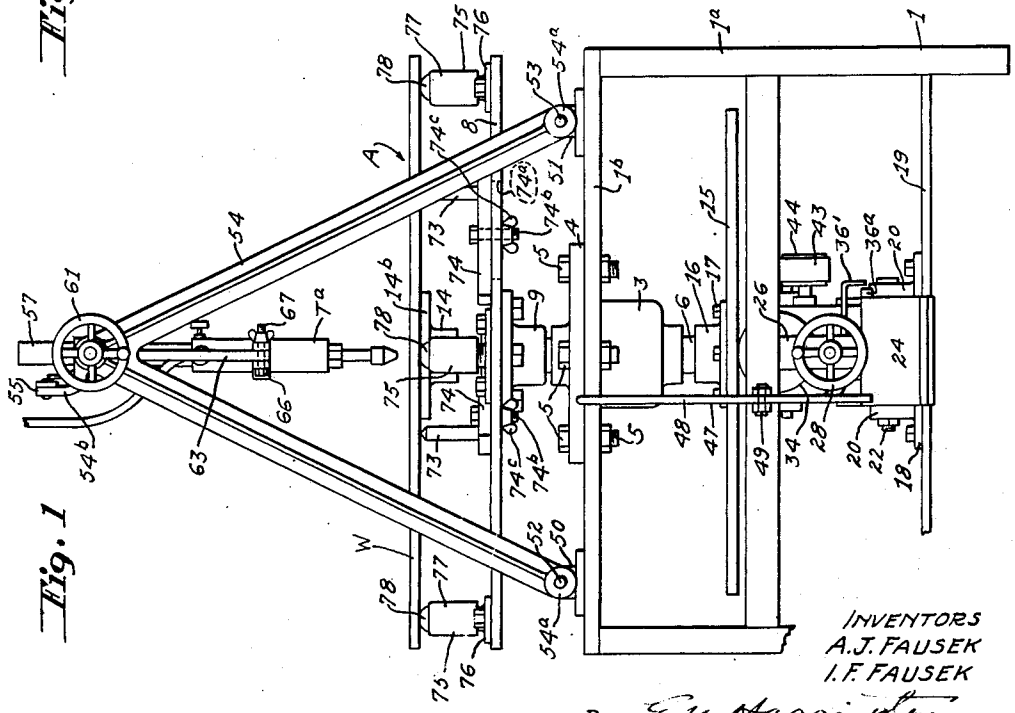

Fig. 1

INVENTORS
A. J. FAUSEK
I. F. FAUSEK
BY Ellis Harrington
ATTORNEY

Aug. 3, 1937. A. J. FAUSEK ET AL 2,088,695

CUTTING MACHINE

Filed Nov. 29, 1935 2 Sheets-Sheet 2

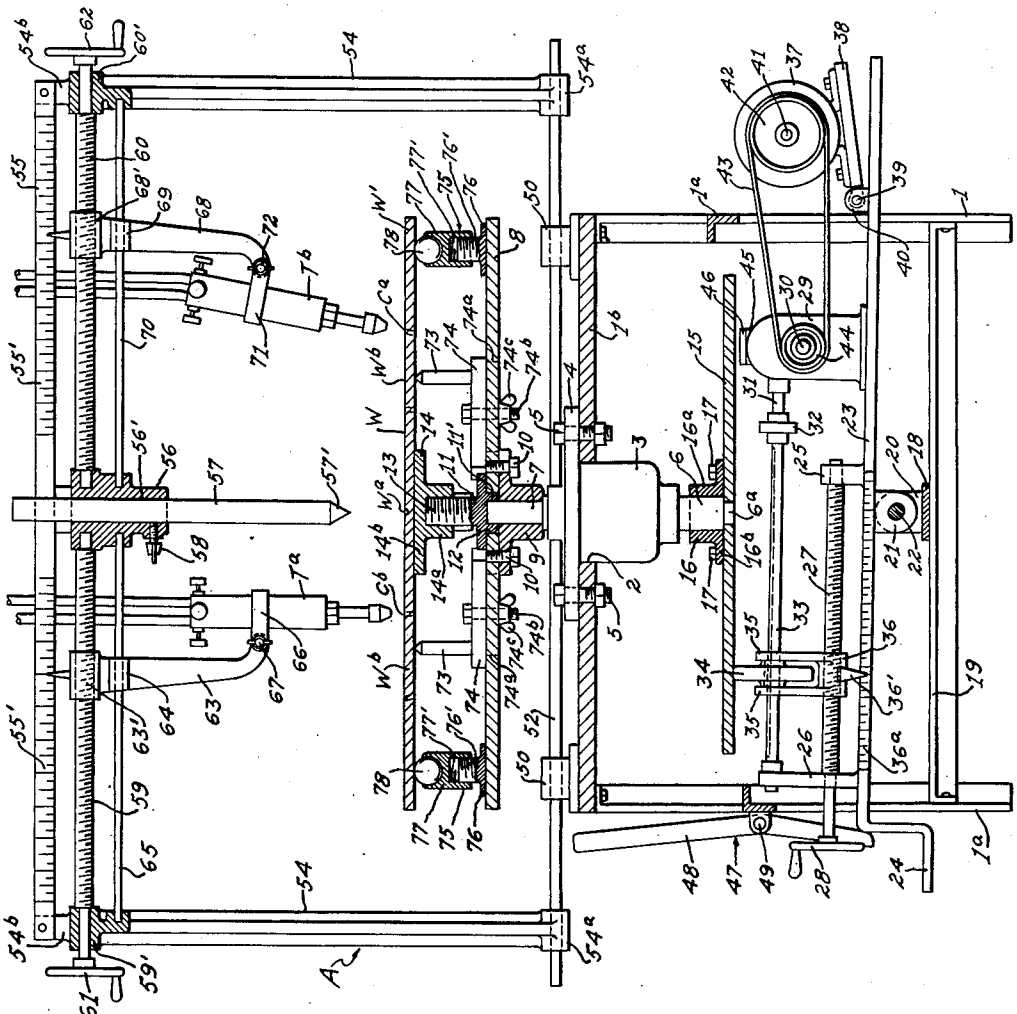

Fig. 3

INVENTORS
A. J. FAUSEK
I. F. FAUSEK
BY Emmett Harrington
ATTORNEY

Patented Aug. 3, 1937

2,088,695

UNITED STATES PATENT OFFICE

2,088,695

CUTTING MACHINE

Arthur J. Fausek and Irwing F. Fausek, Clayton, Mo.

Application November 29, 1935, Serial No. 52,133

12 Claims. (Cl. 266—23)

This invention relates generally to cutting machines, and more specifically to machines for cutting metal and other materials with the aid of gas-burning torches, the predominant object of the invention being to provide a machine of this type which, because of its improved construction and arrangement, is capable of performing its intended function in a highly efficient manner.

Fig. 1 is an end elevation of the improved cutting machine.

Fig. 2 is a plan view of the machine illustrated in Fig. 1.

Fig. 3 is a vertical section of the machine taken on line 3—3 of Fig. 2.

In the drawings, wherein is shown for the purpose of illustration, merely, one embodiment of the invention, A designates the improved machine generally. The machine A includes a base frame 1 which comprises suitable supporting legs 1a and a rectangular top plate 1b which is supported by said legs. The top plate 1b of the base frame 1 is provided with a centrally located opening 2, in which a bearing 3 is disposed, said bearing being extended below said top plate and being provided at its upper end with a flange 4 that is secured by bolts 5 to the top plate. The bearing 3 supports a vertically extended shaft 6 which is of reduced diameter at its upper end, as indicated at 7, said reduced upper end portion of said shaft fixedly supporting a circular plate 8 which provides a turntable. The plate 8 is secured to the reduced upper end portion 7 of the shaft 6 through the instrumentality of a member 9 which includes a tubular portion that receives the reduced portion of the shaft, and an upper flange which is secured by fastening devices 10 to the plate 8 (see Fig. 3).

Associated with the plate 8 is a work support which includes a supporting member 11 having a flange that contacts with the upper face of said plate 8, a tubular portion 11' being extended downwardly from said flange as shown in Fig. 3 and being disposed in a centrally located opening 12 formed through the plate 8. The tubular portion 11' of the supporting member 11 receives the upper portion of the reduced portion 7 of the shaft 6, and the upper portion of said supporting member is screw-threaded as indicated at 13. The screw-threaded portion 13 of the supporting member screw-threadedly receives a work-receiving element 14, which includes an internally screw-threaded, tubular portion 14a and a flanged, upper portion 14b that receives and supports the work W.

Fixed to the vertical shaft 6 at its lower end is a turning plate 15 which is secured to said shaft through the instrumentality of a member 16. This member 16 includes a tubular portion 16a that receives the lower end portion of the shaft 6 and a flange 16b which is arranged in contact with the top face of the turning plate and is secured to said turning plate by means of fastening devices 17. The extreme lower end of the shaft 6 is of reduced diameter as indicated at 6a, and this reduced end portion is received by an opening formed through the turning plate, as shown in Fig. 3.

Extended transversely of the machine A is a member 18 which is supported by opposed side elements 19 of the base frame of the machine A. The member 18 has fixed thereto upstanding, spaced ears 20 between which a lug 21 is disposed, said lug being pivotally attached to said ears 20 through the instrumentality of a pivot rod 22. The lug 21 is extended downwardly from a platform 23, said platform being in fixed relation with respect to said lug so that these parts move pivotally as a unit relative to the pivot rod 22. The platform 23 at one end thereof is provided with an extension 24 which extends downwardly and outwardly from the main body portion of the platform, as shown in Fig. 3. This extension serves as a treadle which may be depressed by a foot of the operator of the machine in order to rock the platform 23 about the pivot rod 22 for a purpose to be hereinafter set forth.

Extended upwardly from the platform 23 is a pair of spaced apart bearings 25 and 26, the bearing 25 being located adjacent to the longitudinal center of the platform and the taller bearing 26 being located close to the treadled end of said platform. The bearings 25 and 26 support for rotation a screw-threaded rod 27, the opposite end portions of said screw-threaded rod which are received by the bearings 25 and 26 being of reduced diameter, as shown in Fig. 3, and the shoulders at the opposite ends of the screw-threaded portion of said rod being in contact with the adjacent inner faces of said bearings so as to prevent longitudinal movement of the rod. At its outer end the rod 27 is provided with a hand wheel 28 which facilitates the task of rotating the rod.

Supported by the platform is a gearing housing 29 which encloses a suitable set of speed-reducing gears (not shown). These speed-reducing gears transmit movement from a shaft 30 supported by the gearing housing to a shaft 31

which is also supported by the gearing housing, and this shaft 31 is connected by means of a coupler 32 to a shaft 33 which is supported at its outer end by the bearing 26. The shaft 33 has slidably mounted thereon a friction drive disk 34, said drive disk being splined to the shaft 33 so that it may slide longitudinally thereof while being connected to the shaft for rotation therewith. The drive disk 34 is arranged between legs 35 by a bifurcated member 36, the hub portions of said drive disk being in contact with the adjacent inner faces of the legs of said bifurcated member 36 and said legs being provided with openings through which the shaft 33 passes. The lower bridge portion of the bifurcated member 36 is provided with a transversely extended, screw-threaded opening through which the screw-threaded portion of the rod 27 is extended, the screw-threads of the opening and of the rod being in screw-threaded relation so that rotation of the rod 27 will cause the bifurcated member 36 to move longitudinally of the screw-threaded portion of said rod 27. Such movement of the bifurcated member will, of course, cause the friction drive disk to move longitudinally of the shaft 33 and with respect to the turning plate 15 toward or from the center thereof.

At the end of the platform 23 opposite to the end thereof at which the treadle portion 24 is located an electrical motor or other suitable prime mover 37 is arranged. This motor is mounted on a base element 38 which is pivoted at one of its ends, as indicated at 39 in Fig. 3, to upstanding ears 40 associated with the platform 23. The shaft 41 of the motor 37 has mounted thereon a pulley 42 over which a power transmission belt 43 operates, this transmission belt operating also over a pulley 44 mounted on the shaft 30 of the gearing housing 29. The power transmission belt 43 transmits motion from the motor shaft 41 to the shaft 30, and because of the pivoted manner of supporting the motor 37 said transmission belt will be maintained in a tight condition at all times. At the top of the gearing housing 29 is located an upwardly extended portion 45, to which is fixed a section 46 of brake lining or other suitable material. This section of material serves a purpose to be hereinafter set forth.

As already stated herein, the platform is moved about the pivot rod 22 by the operator of the machine depressing the treadle 24 thereof with his foot, and means 47 is provided to maintain the platform in such moved position. This means comprises an arm 48 which is pivotally attached to the base frame of the machine as indicated at 49 in Fig. 3, said arm being inclined outwardly from the pivot thereof in upward and downward directions. When the platform 23 has been depressed, the lower end of the arm 48 may be moved inwardly so that the bottom edge thereof engages the top face of the platform to maintain said platform in its depressed position and prevent the weight of the motor from returning the treadled end of the platform to its elevated position. When it is desired to release the platform to permit the treadled end thereof to rise to its elevated position, the upper portion of the arm 48 is moved inwardly, which results in corresponding movement of the lower portion of the arm outwardly to free said lower arm portion from engagement with the platform. The weight of the motor 37 will then move the treadled end of the platform upwardly until the peripheral edge of the frictional drive disk 34 contacts with the lower face of the plate 15.

Fixed to the top plate 15^b at the upper face thereof are pairs of bearings 50 and 51 which support rods 52 and 53 that extend longitudinally of the machine. The rods 52 and 53 support an upper frame which comprises a pair of oppositely located, inverted V-shaped members 54 that are connected together at their upper ends by an elongated element 55 extended longitudinally of the machine, said members 54 being provided with hollow, lower portions 54^a that receive the rods 52 and 53, and having upstanding lugs 54^b to which the element 55 is attached. The elongated element 55 at its approximate longitudinal center supports a bearing element 56. The bearing 56 is provided with a vertically disposed opening 56' formed centrally therethrough in which a centering element 57 is supported, said bearing being provided with a set screw 58 by means of which the centering element may be secured in various vertical positions to which it has been adjusted. The centering element 57 is pointed at its lower end, as indicated at 57' in Fig. 3.

Supported for rotation at opposite sides of the bearing element 56 is a pair of rods 59 and 60, said rods being supported at their inner ends by the bearing element 56 and at their outer ends by bearing portions 59' and 60' of the opposed, inverted V-shaped members 54 (see Fig. 3). The rods 59 and 60 are screw-threaded throughout most of their lengths, the opposite end portions thereof, which are received in supporting openings formed in the bearing element 56 and in the bearing portions 59' and 60' of the frame members 54, being of reduced diameter with shoulders at opposite ends of the screw-threaded portions of the rods in contact with said bearing element 56 and said bearing portions 59' and 60' of the members 54, so as to prevent longitudinal movement of said rods. The rods 59 and 60 are provided at their outer ends with hand wheels 61 and 62 which facilitate rotation of the rods.

Associated with the rod 59 is a movable bracket 63 which supports a gas-burning cutting torch T^a. This movable bracket includes an upper, tubular portion 63' which is internally screw-threaded, the screw-threaded portion of the rod 59 being extended through the tubular portion of the bracket with the screw-threads of said rod in screw-threaded relation with the screw-threads of said tubular portion. The movable bracket 63 includes a second tubular portion 64 through which a rod 65 is extended, said rod being fixedly supported at its opposite ends by the bearing element 56 and one of the inverted V-shaped members 54 (Fig. 3). The movable bracket 63 includes also a curved lower end portion to which a band 66 is attached by means of a fastening device 67, said band 66 being arranged in embracing relation with the torch T^a whereby said torch is attached to the movable bracket.

A movable bracket 68 similar to the movable bracket 63 just described is associated with the rod 60. The movable bracket 68 includes an upper tubular portion 68' which is provided with internal screw-threads that engage the screw-threads of the rod 60. Also, the movable bracket 68 is provided with a second tubular portion 69 through which is extended a rod 70 fixedly supported at its opposite ends by the bearing element 56 and one of the inverted V-shaped members 54. Likewise the movable bracket is provided with a curved lower portion, to which is

attached a band 71, this band being arranged in embracing relation with respect to a gas-burning cutting torch T^b and being connected to the movable bracket through the instrumentality of a fastening device 72.

It is obvious that by rotating the rods 59 and 60 with the aid of the hand wheels 61 and 62 the movable brackets 63 and 68, and with them the torches T^a and T^b, may be moved longitudinally of said rods. This results from the screw-threaded relation of the rods and the tubular portions 63' and 68' of the brackets. Also, it is plain that during such movement of the movable brackets the rods 65 and 70 will guide said brackets in straight line movement and eliminate any tendency of the brackets to rotate with the rods 59 and 60.

In order to support the work W, which is illustrated as a circular sheet of metal, we provide the machine A with a plurality of upstanding posts 73 which preferably are provided with tapered or pointed upper ends. These posts are mounted on blocks 74 which are movably supported on the plate 8, preferably by providing the plate 8 with radially extended slots 74^a through which bolts 74^b carried by the blocks extend. The bolts 74^b are provided with wing nuts 74^c which secure the blocks in positions to which they have been adjusted. As will presently appear herein, the posts 73 provide support at a multiplicity of points for the part of the sheet being operated on which is to be used; in other words, a part of the sheet W is to be cut from the entire sheet for future use, and when the cutting has been performed the remainder of the sheet is offcast. The posts 73 support the part of the sheet which is to be retained.

In order to support the outer, offcast portion W' of the sheet W a plurality of vertically adjustable supports 75 is provided. Each of these supports comprises a base portion 76, which is fixedly supported by the plate 8, and an upper portion 77, which is provided with a cavity in which an anti-friction ball or roller 78 is disposed. The anti-friction balls or rollers of the various adjustable supports 75 contact with the lower face of the outer offcast portion W' of the work, as shown in Fig. 3, so that the work may rotate freely with respect to the adjustable supports. The base portion 76 of each adjustable support includes an upwardly extended, screw-threaded shank 76' which is received by a screw-threaded opening 77' formed in the upper portion 77 of the adjustable support. When it is desired to increase or diminish the height of the adjustable supports 75 such results may be attained by rotating the upper portions with respect to the base portions, and because of the screw-threaded relation of said parts the upper portions of the adjustable supports will be raised or lowered, depending on the direction of rotation of said upper portions.

In describing the operation of the improved machine, it will be assumed that the work to be performed is the cutting from a sheet of metal a circular plate to be used, for instance, as a flange. The first step is to locate the precise center of the sheet of metal to be operated on and form at such precise center a depression W^a with the aid of a punch or other suitable means. The posts are then adjusted so that when the sheet comprising the work is arranged in place in the machine they will be properly positioned to contact with the approximate center of the portion W^b of the work to be retained. Also, the adjustable supports are adjusted as to height in the manner already explained herein. The sheet of metal constituting the work is then arranged in place on the work-receiving element 14, the posts 73, and the adjustable supports 75, and said sheet is struck light blows above the locations of the posts 73 to cause the pointed upper ends of the posts to be slightly embedded in the sheet. Proper centering of the work sheet is accomplished by moving the centering element 57 downwardly and positioning the work sheet so that the depression W^a receives the pointed, lower end of said centering element. The centering element may remain in its lowered position during the cutting operations, or said centering element may be raised after the work sheet has been centered in the machine. The torches T^a and T^b are then adjusted to their proper positions by rotating the rods 59 and 60, the operator of the machine being aided in these adjustments by the scales 55' on the longitudinally extended element 55.

The work sheet W being properly positioned in the machine and the torches T^a and T^b being properly located to produce the desired cuts in the work sheet, the machine is now adjusted so as to provide the proper speed of rotation of the work sheet. In other words, the diameter of the cut to be made plus the thickness of the metal to be cut determine the speed of rotation of the work sheet, and the improved machine includes simple means for properly regulating the speed of rotation of the work sheet in accordance with these two measurements. To regulate the speed of rotation of the work sheet W with respect to the diameter of the cut or cuts to be made, the rod 27 is rotated with the aid of the hand wheel 28 to adjust the friction drive disk 34 relative to the turning plate 15 toward and from the center thereof. The directions for operating the machine will advise an operator of the machine that for a cut of a certain diameter the indicator 36' of the bifurcated member 36 should point to a predetermined reading on the scale 36^a which is movable with the pivoted platform 23. Therefore all the operator need do is to rotate the rod 27 to move the bifurcated member longitudinally of said rod until the proper reading on the scale is indicated, at which time the friction drive disk 34 will be properly positioned with respect to the turning plate 15 to drive said turning plate at the desired speed.

With respect to the speed of rotation of the work sheet required because of the thickness of said work sheet, this speed is regulated in the embodiment of the invention illustrated in the drawings, by employing motor shaft pulleys 42 of different diameters. In other words, the directions for operation of the machine will advise an operator of the machine that for cutting a work sheet of a certain thickness a motor shaft pulley 42 of a certain named size must be used. Therefore, all the operator need do is to apply a motor shaft pulley of the designated size to the motor shaft and arrange the transmission belt 43 about said motor shaft pulley and about the pulley 44, whereupon the desired speed of rotation will be transmitted from the motor shaft 41 to the shaft 44.

When the friction drive disk has been properly located with respect to the turning plate 15 and the proper motor shaft pulley 42 has been applied to the motor shaft 41, the motor 37 is started, the forward end of the platform 23 at this time being held in a depressed position by the arm 48 so that the friction drive disk 34 is out of contact with

the turning plate 15 and the section of braking material 46 is in braking contact with said turning plate to prevent turning thereof. The arm 48 is then operated to release the forward end of the platform 23 and permit same to move upwardly, thus causing the peripheral face of the friction drive disk to move into contact with the turning plate and the section of braking material to move away from said turning plate. The friction drive disk will then drive the work sheet W at the speed of rotation established by the adjustments previously made. The torches T^a and T^b are then lighted in the usual manner and the flames produced at the tips of said torches will produce circular cuts C^a and C^b as the work sheet is rotated. It is important to note that as the work sheet is cut the various severed or partially severed parts thereof are supported so that there will be no sagging of any part of the work sheet which would tend to distort the work sheet and perhaps cause deviation of the cuts from their true circular courses. In other words, the center offcast portion of the work sheet is supported by the element 14, the retained portion W^b of said work sheet is supported by the posts 73, and the outer offcast portion W' of the work sheet is supported by the adjustable supports 75. This results in the work sheet being maintained in its proper position throughout the cutting operations.

It is pointed out that the torches T^a and T^b may be moved to an angular position as suggested in connection with the torch T^b in Fig. 3, the bands 66 and 71 being pivoted about the loosened fastening devices 67 and 72 and being held in the positions to which they have been moved by tightening said fastening devices. When one or both of the torches are moved to angular positions as described, parts of the work sheet may be provided with beveled edges at the cuts.

When it is desired to arrest rotation of the work sheet W when the cuts have been completed, or for any other reason, the treadle portion 24 of the platform 23 is depressed to move the friction drive disk 34 out of contact with the turning plate 15 and to move the section of braking material 46 into braking contact with said turning plate. This results in immediate stopping of the turning plate and the work sheet. As already stated herein, the treadled end of the platform 23 is held in its depressed position by the arm 48 and the depressed end of the platform may be released by moving the upper portion of said arm inwardly so as to cause the lower portion of said arm to move out of contact with the platform end.

It is to be noted that a single speed motor is employed in the operation of the machine, and that the various means for regulating the speed of the work sheet W are distinct from the motor.

We claim:

1. A cutting machine comprising a rotatable work support, a gas-burning cutting torch, means for imparting rotary movement to said work support, said means comprising a plate arranged in vertically spaced alinement with respect to said work support, rigid means for connecting said plate to said work support, a friction drive disk adapted to frictionally drive said plate in a rotary direction, and a prime mover for rotating said friction drive disk, means for adjusting said friction drive disk with respect to said plate toward and from the center thereof so as to regulate the speed of rotation of said plate and said work support, and changeable means for regulating the speed of rotation imparted to said friction drive disk by said prime mover.

2. A cutting machine comprising a rotatable work support, a gas-burning cutting torch, means for adjusting the position of said gas-burning torch transversely with respect to said work support, means for imparting rotary movement to said work support, said means comprising a plate arranged in vertically spaced alinement with respect to said work support, rigid means for connecting said plate to said work support, a friction drive disk adapted to frictionally drive said plate in a rotary direction, and a prime mover for rotating said friction drive disk, and means for adjusting said friction drive disk with respect to said plate toward and from the center thereof so as to regulate the speed of rotation of said plate and said work support.

3. A cutting machine comprising a circular plate providing a rotatable work support, a gas-burning cutting torch, means for adjusting the position of said gas-burning torch transversely with respect to said work support, means for imparting rotary movement to said work support, said means comprising a plate arranged in vertically spaced alinement with respect to said work support, rigid means for connecting said plate to said work support, a friction drive disk adapted to frictionally drive said plate in a rotary direction, and a prime mover for rotating said friction drive disk, means for adjusting said friction drive disk with respect to said plate toward and from the center thereof so as to regulate the speed of rotation of said plate and said work support, and changeable means for regulating the speed of rotation imparted to said friction drive disk by said prime mover.

4. A cutting machine comprising a circular plate providing a rotatable work support, a gas-burning cutting torch, means for adjusting the position of said gas-burning torch transversely of said work support, means for imparting movement to said work support, said means comprising a plate, means for connecting said plate to said work support, a friction drive disk adapted to frictionally drive said plate in a rotary direction, and a prime mover for rotating said friction drive disk, a movable support for said friction drive disk operable to move same into and out of driving contact with said plate, means supported by said movable support and movable into contact with said plate when said friction drive disk is moved out of driving contact therewith for arresting movement of said plate, and means for adjusting said friction drive disk with respect to said plate toward and from the center thereof so as to regulate the speed of rotation of said plate and said work support.

5. A cutting machine comprising a rotatable work support, a gas-burning cutting torch, means for adjusting the position of said gas-burning torch, means for imparting movement to said work support, said means comprising a plate, means for connecting said plate to said work support, a friction drive disk adapted to frictionally drive said plate in a rotary direction, and a prime mover for rotating said friction drive disk, a pivotally movable support for said friction drive disk operable to move same into and out of driving contact with said plate, means supported by said movable support and movable into contact with said plate when said friction drive disk is moved out of driving contact therewith for arresting movement of said plate, and means for adjusting said friction drive disk with respect to said plate toward and from

the center thereof so as to regulate the speed of rotation of said plate and said work support.

6. A cutting machine comprising a rotatable work support, a gas-burning cutting torch, means for adjusting the position of said gas-burning torch, means for imparting movement to said work support, said means comprising a plate, means for connecting said plate to said work support, a friction drive disk adapted to frictionally drive said plate in a rotary direction, and a prime mover for rotating said friction drive disk, a pivotally movable support for said friction drive disk operable to move same into and out of driving contact with said plate, means supported by said movable support and movable into contact with said plate when said friction drive disk is moved out of driving contact therewith for arresting movement of said plate, and means for adjusting said friction drive disk with respect to said plate toward and from the center thereof so as to regulate the speed of rotation of said plate and said work support, said prime mover being mounted on and movable with said pivotally movable support.

7. A cutting machine comprising a rotatable work support, a gas-burning cutting torch, means for adjusting the position of said gas-burning torch, means for imparting movement to said work support, said means comprising a plate, means for connecting said plate to said work support, a friction drive disk adapted to frictionally drive said plate in a rotary direction, and a prime mover for rotating said friction drive disk, a pivotally movable support for said friction drive disk operable to move same into and out of driving contact with said plate, means supported by said movable support and movable into contact with said plate when said friction drive disk is moved out of driving contact therewith for arresting movement of said plate, means for adjusting said friction drive disk with respect to said plate toward and from the center thereof so as to regulate the speed of rotation of said plate and said work support, said prime mover being mounted on and movable with said pivotally movable support, and changeable means for regulating the speed of rotation imparted to said friction drive disk by said prime mover.

8. A cutting machine comprising a rotatable work support, a gas-burning cutting torch, means for adjusting the position of said gas-burning torch, means for imparting movement to said work support, said means comprising a plate, means for connecting said plate to said work support, a friction drive disk adapted to frictionally drive said plate in a rotary direction, and a prime mover for rotating said friction drive disk, a pivotally movable support for said friction drive disk operable to move same into and out of driving contact with said plate, means supported by said movable support and movable into contact with said plate when said friction drive disk is moved out of driving contact therewith for arresting movement of said plate, means for adjusting said friction drive disk with respect to said plate toward and from the center thereof so as to regulate the speed of rotation of said plate and said work support, said prime mover being mounted on and movable with said pivotally movable support, changeable means for regulating the speed of rotation imparted to said friction drive disk by said prime mover, and releasable means for retaining said pivotally movable support in a position where said friction drive disk is out of driving contact with said plate.

9. A cutting machine including a circular plate providing a work support, a gas-burning torch located above said work support, and means for supporting work above said work support, said means comprising a plurality of upstanding elements adjustably supported by said work support for movement radially with respect thereto and adapted to receive in contact therewith work to be cut.

10. A cutting machine including a circular plate providing a work support, a gas-burning torch located above said work support, and means for supporting work above said work support, said means comprising a plurality of upstanding elements adjustably supported by said work support for movement radially with respect thereto and adapted to receive in contact therewith work to be cut, said upstanding elements being provided with pointed upper ends adapted to be embedded in the work.

11. A cutting machine including a work support, a gas-burning torch located above said work support, and means for supporting work above said work support, said means comprising a plurality of upstanding elements adjustably supported by said work support and adapted to receive in contact therewith work to be cut, said upstanding elements being provided with pointed upper ends adapted to be embedded in the work, and vertically adjustable work-supporting elements located outwardly of said upstanding elements for supporting the outer portion of the work.

12. A cutting machine including a work support, a gas-burning torch located above said work support, and means for supporting work above said work support, said means comprising a plurality of upstanding elements adjustably supported by said work support and adapted to receive in contact therewith work to be cut, said upstanding elements being provided with pointed upper ends adapted to be embedded in the work, vertically adjustable work-supporting elements located outwardly of said upstanding elements for supporting the outer portion of the work, and means located inwardly of said upstanding elements for supporting the inner portion of said work.

ARTHUR J. FAUSEK.
IRWING F. FAUSEK.