(No Model.)

W. RAFEL & C. G. KNOERZER.

IGNITING DEVICE FOR BICYCLE LAMPS.

No. 590,911. Patented Sept. 28, 1897.

Fig. 1.

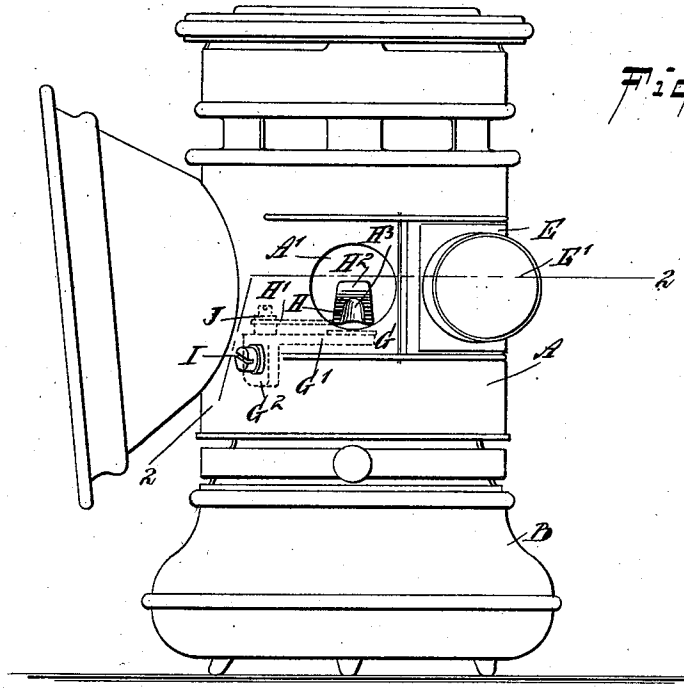

Fig. 2.

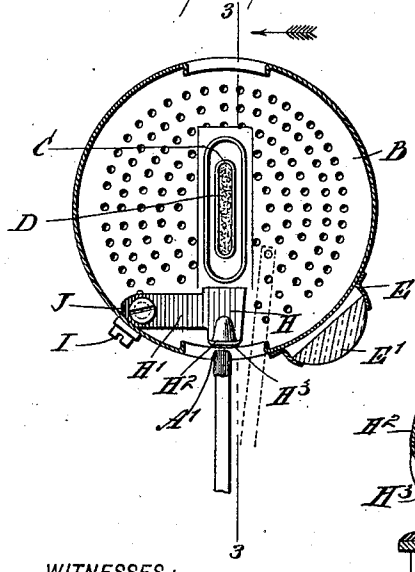

Fig. 3.

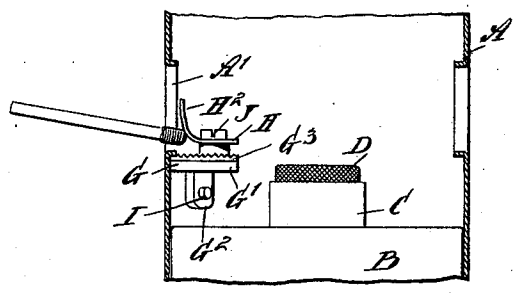

Fig. 4.

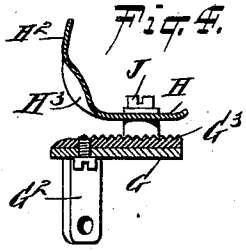

WITNESSES:

William P. Goebel.

Rud. G. Hoster.

INVENTORS

W. Rafel

C. G. Knoerzer.

BY

ATTORNEYS.

THE NORRIS PETERS CO., PHOTO-LITHO., WASHINGTON D. C.

UNITED STATES PATENT OFFICE.

WILL RAFEL AND CHARLES G. KNOERZER, OF NEW YORK, N. Y.

IGNITING DEVICE FOR BICYCLE-LAMPS.

SPECIFICATION forming part of Letters Patent No. 590,911, dated September 28, 1897.

Application filed June 2, 1897. Serial No. 639,153. (No model.)

To all whom it may concern:

Be it known that we, WILL RAFEL and CHARLES G. KNOERZER, of New York city, county and State of New York, have invented a new and Improved Igniting Device for Bicycle-Lamps, of which the following is a full, clear, and exact description.

The object of the invention is to provide a new and improved igniting device for bicycle-lamps, arranged in such a manner that upon introducing a match the latter is readily ignited to light the wick of the lamp, and at the same time the convenient removal of the burned match from the igniting device is permitted without clogging the same or scraping the burned head of the match into the lamp and upon the wick, and thereby causing a bad burning of the same, as is so frequently the case with lamps and igniters heretofore constructed.

The invention consists principally of a fixed and a yielding jaw arranged one above the other and formed with sidewise-extending supporting-arms for attachment to the lamp-casing to permit of pushing a match laterally between the jaws, igniting the match-head, and lighting the wick to allow of pushing the match sidewise and in an opposite direction to the said arms to move the burned match out of engagement with the jaws and out of possible contact with the supporting-arms after ignition has taken place.

The invention also consists of certain parts and details and combinations of the same, as will be fully described hereinafter and then pointed out in the claims.

Reference is to be had to the accompanying drawings, forming a part of this specification, in which similar characters of reference indicate corresponding parts in all the figures.

Figure 1 is a side elevation of the improvement as applied. Fig. 2 is a sectional plan view of the same on the line 2 2 of Fig. 1. Fig. 3 is a transverse section of the improvement as applied, and Fig. 4 is a transverse section of the improvement on an enlarged scale.

The bicycle-lamp on which the device is applied is provided with the usual casing A and a lamp B, removably connected with the casing and formed with a wick-tube C, containing a wick D. In front of the latter and in alinement therewith is arranged the igniting device, access to which is had through an opening A′ in the side of the casing A and which opening is normally closed by a slide E, containing a colored lens E′. When the slide E is open, a match may be readily passed into the igniting device to cause ignition of the match, the burning end of which is guided by the igniting device upon the wick D, so as to light the same.

The igniting device is provided with two jaws G H, located one above the other and extending transversely from the opening A′ toward the wick D. The jaws G H are provided with sidewise-extending arms G′ H′, respectively, and the jaw G is formed with a downwardly-extending lug G^2, fastened by a screw I to the side of the casing A.

On the arm G′ is secured the end of the arm H′ by means of a screw J, so that the side of the jaws opposite the said arms is free to permit of removing the match from the jaws and drawing it out of the opening A′ after ignition has taken place to prevent the burned head of the match from being scraped off into the lamp-casing and upon the wick.

As shown in the drawings, the jaw G is provided on its top with a roughened surface G^3, either formed directly on the jaw or on a separate plate secured thereto, as indicated in Fig. 4. The jaw G is preferably rigid, while the arm H′ is arranged to yield, so that when the head of the match is introduced between the two jaws and the match is pushed laterally sufficient friction is created on the match-head to ignite the same while passing between the jaws. When ignition has thus been been secured, the match-head has passed the inner ends of the jaws and now extends over the wick D, so as to light the same.

The front end of the jaw H is formed with an upwardly-extending curved flange H^2, formed in its front with a recess H^3 for guiding the match-head between the jaws, especially in the dark, so as to insure proper action of the jaws on the match-head and at the same time prevent the operator from pushing the match in the wrong direction when desiring to light the lamp.

It is evident that by the arrangement described the operator can readily push the match with its head forward into the jaws to cause ignition of the match and lighting of

the wick, and when this has been accomplished a slight movement of the match to the right—that is, in an opposite direction to that in which the arms G' H' are extended—causes a freeing of the match from the jaws and convenient withdrawal from the opening A' without scraping the burned head of the match into the lamp. (See dotted lines in Fig. 2.)

The device is simple and durable in construction and can be readily applied to any of the well-known types of bicycle-lamps.

As shown in the drawings, the arms G' and h' extend to the left from the jaws, but it is evident that the said arms may be made to extend to the right, and the burned match after ignition is then pushed to the left to disengage it from the jaws.

For some lamps it may be desirable to extend the arms upward and push the burned match downward out of the jaws after ignition, or this may be reversed—that is, the arms extended downward and the burned match pushed upward for removal.

Having thus fully described our invention, we claim as new and desire to secure by Letters Patent—

1. A match-igniting device for a lamp comprising a fixed jaw and a movable jaw, and supporting-arms for the jaws extended transversely of an opening through the lamp-casing, the said opening being extended beyond the end of the jaws, the opening or outlet between said jaws being in an opposite direction to the line of the supporting-arms whereby a match, after ignition, may be moved to one side, out of the jaws, before removal from the casing, substantially as specified.

2. An igniting device for bicycle-lamps, comprising a fixed and a yielding jaw arranged one above the other, and formed with sidewise-extending supporting-arms for attachment to the lamp-casing, to permit of pushing a match laterally between the jaws, igniting the match-head and lighting the wick of the lamp, and to allow of pushing the match sidewise in an opposite direction to the said arms, to move the burned match out of engagement with the jaws and out of possible contact with the supporting-arms after ignition has taken place, the yielding jaw being formed at its front end with an upwardly-extending curved flange, formed with a recess for guiding the match-head between the jaws, substantially as shown and described.

WILL RAFEL.
CHARLES G. KNOERZER.

Witnesses:
THEO. G. HOSTER,
EVERARD B. MARSHALL.