July 8, 1924. 1,500,903

T. SHIPLEY

ICE CAN LIFTER

Filed Dec. 10, 1923

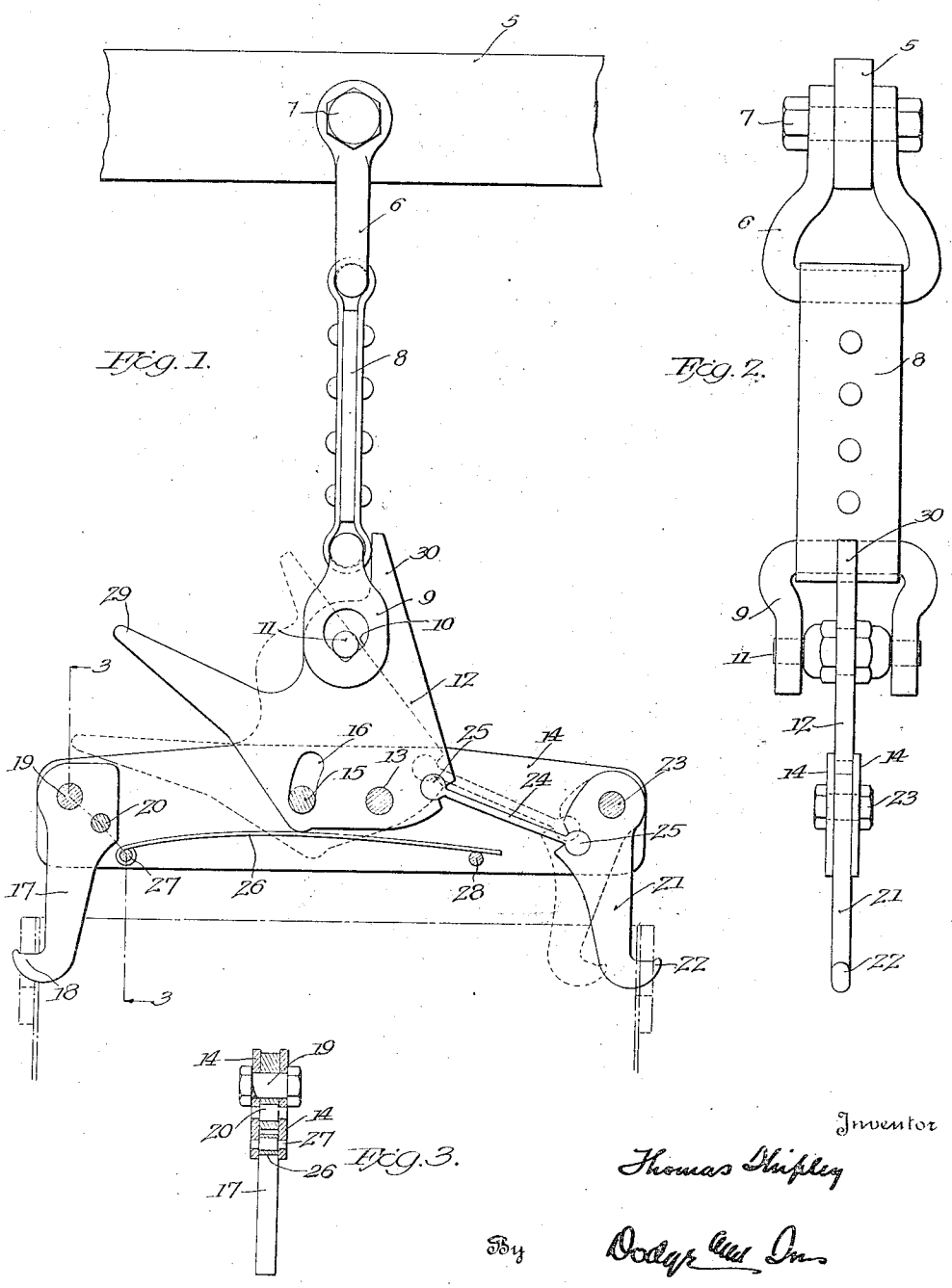

Inventor

Thomas Shipley

By Dodge and Sons

Attorneys

Patented July 8, 1924. 1,500,903

UNITED STATES PATENT OFFICE.

THOMAS SHIPLEY, OF YORK, PENNSYLVANIA.

ICE-CAN LIFTER.

Application filed December 10, 1923. Serial No. 679,791.

To all whom it may concern:

Be it known that I, THOMAS SHIPLEY, a citizen of the United States, residing at York, in the county of York and State of Pennsylvania, have invented certain new and useful Improvements in Ice-Can Lifters, of which the following is a specification.

This invention relates to hoisting apparatus and particularly to devices for handling freezing cans in ice plants, and known in the trade as ice can lifters.

The object of the invention is to provide a device which is easily engaged in the lifter holes in the can, which may be automatically disengaged by simply lowering the hoist, and which is so designed as to preclude rotation of the can on a vertical axis.

This last is a feature of the utmost importance, particularly where the lifters are mounted in gangs on a cross bar so as to permit several cans to be withdrawn from or inserted into the brine tank at one time.

A preferred embodiment of the invention is illustrated in the accompanying drawing, in which:

Fig. 1 is a side view of the can lifter with one side plate removed to show the internal construction;

Fig. 2 is an end view of the complete device looking to the left relatively to Fig. 1, and

Fig. 3 is a fragmentary section on the line 3—3 of Fig. 1.

A supporting bar 5 is provided to carry a plurality of can lifters (only one such lifter being shown in the drawing), and the bar 5 is connected in any usual manner with a hoist. The use of a plurality of can lifters on a single member of this type is familiar in the art and consequently is not illustrated.

The means for connecting each can lifter to the bar 5 includes a clevis 6, a bolt 7 passing through the clevis 6 and the bar 5, a rigid link 8 suspended from clevis 6, and a second clevis 9 suspended from the link 8. The parts are so designed as to permit the link 8 and the clevises 6 and 9 to swing in the vertical plane of the bar 5 but to preclude rotation about a vertical axis. The purpose of this is to maintain the desired alignment of each can lifter to assure proper registry of each lifted can with the openings in the cover structure of the brine tank.

The clevis 9 is provided with openings which have at their lower sides grooves or V-shaped notches indicated at 10, and the clevis 9 supports a trunnion 11 rigidly fixed in a hook actuating plate 12. The openings in the clevis 9 are substantially larger than the trunnions 11, and the purpose of this construction is to permit slight rotation of the can lifter about the vertical axis when not under load. This permits the operator to engage a plurality of lifters on the bar 5 with a plurality of cans, even if these cans be not in strict alignment. As soon as the cans are lifted clear of their support, the trunnions 11 will automatically align themselves with the V-notches 10.

The actuator plate 12 is pivoted on a bolt 13, extending between two side plates 14, and the angular movement of the actuator is limited by means of a bolt 15 which passes through an arcuate slot 16 in the member 12.

Mounted between the plates 14, at one end thereof, is a fixed hook member 17, having a projecting hook or finger 18 designed to engage the can through the usual hole formed therein. This hook member 17 is held by a bolt 19 and pin 20, whose construction will be further described.

Mounted between the side plates 14, near their opposite ends, is a movable hook member 21 which also has a hook or finger 22 similar to the finger 18. This hook member 21 is pivoted on a bolt 23 and is connected with the actuator 12 by means of a link 24 formed of plate, and having circular enlargements 25 at its ends. These circular enlargements 25 engage in circular seats formed to receive them in the members 12 and 21. The link 24 is confined between the side plates 14 and is thus held in engagement with the actuator 12 and hook member 21. The actuator 12 is urged to its normal position, shown in full lines in Fig. 1, by means of a bow spring 26, which, at one end, encircles a pin 27 extending between the plates 14 and which, at the other end, is sustained by a similar pin 28.

The bolts 13, 15, 19, and 23 are reduced at their threaded ends to provide shoulders, against which the nuts seat, so that the bolts do not act to clamp the side plates 14 together upon the actuator 12, hook member 21, and link 24.

The pins 20, 27, and 28 are formed with reduced ends which seat in holes in the side

plates 14, the middle or large diameter portion of these pins being of such length as properly to space the side plates 14.

The actuator 12 is provided with a handle 29, and on the opposite side of the trunnion 11 is formed with an upstanding guard or stop 30.

To engage the lifter with a can, the hoist is first lowered to the proper position. The operator then grasps the handle 29 and forces it down to the position shown in dotted lines in Fig. 1, thus retracting the hook member 21. He then engages the hook 18 on the member 17 in one can hole, aligns the hook member 22 with the opposite can hole, and releases the handle 29. It will be observed that when the weight of the can is sustained by the hoist, the draft on the actuator 12 acts to maintain the movable hook 21 in can engaging position. Under such conditions, the load is evenly divided between the bolts 13 and 15 which are symmetrically arranged and are spaced far enough apart to support plates 14 in decidedly stable equilibrium. Thus the load of the can tends to hold the hooks in engagement, when the can is hanging straight, and also when the can is swung to the side by lateral shocks sustained by the can. Such shocks are not unusual and the tendency of prior lifters to release under such shocks is a commonly known defect of such lifters, which the present invention overcomes.

After the can has been lowered upon some support, it is possible to disengage the lifter from the can automatically merely by continued lowering of the hoist. The guard 30 causes the clevis 9 and link 8 to fall toward the handle 29 and the weight of these parts is such as to overpower the spring 26, and retract the hook 22. The lifter will then fall clear of the can holes, and can be hoisted away, leaving the can in position.

The lifter is constructed almost entirely of plates and bar stock and can be fabricated at relatively small expense. It is peculiarly desirable because it is easily engaged and disengaged, and because it maintains the alignment of the can, a feature of peculiar importance where a plurality of lifters is mounted in a gang on one supporting bar.

Various structural modifications are possible. The important elements of the combination are a frame, such as that composed of the plates 14 and the connecting pins and bolts; a pair of relatively movable can engaging members carried by the frame; some combined means for suspending the frame and actuating the can engaging members, so contrived as to limit the engaging movement of the members to prevent distortion of the cans; and a yielding means for lightly urging the engaging members in engaging direction, such means being capable of being overpowered by the weight of parts imposed upon it by substantial lowering movement of the hoist.

What is claimed is:

1. In an ice can lifter, the combination of a frame carrying can engaging members relatively movable toward and from each other; combined suspending and actuating means for said frame arranged to move said members in can engaging direction, under the load of a suspended can; stop means limiting such movement; yielding means arranged to urge said members in can engaging direction; and a part associated with the suspending means arranged to overpower said yielding means by its weight when lowered.

2. In an ice can lifter, the combination of a frame carrying can engaging hooks, at least one of which is pivoted to the frame so that the hooks may be moved relatively toward and from each other; a supporting member for said frame mounted for limited movement therein and operatively connected to produce relative movement of the hooks in an engaging direction by the weight of the frame and parts carried thereby; a spring assisting such movement; and suspending means for said supporting member, adapted to engage and move said member in opposition to the action of said spring, when lowered against the same.

3. In an ice can lifter, the combination of a frame carrying a fixed hook and a pivoted hook; a supporting member for said frame pivoted therein and operatively connected with said pivoted hook to move the same in engaging direction under the weight of the frame and parts carried thereby; a spring urging said member and hook in engaging direction; a stop limiting such motion; and a suspending member for said supporting member capable of being lowered against said supporting member and of moving the same by its weight against the opposition of said spring.

4. In an ice can lifter, the combination of a frame composed of a pair of spaced plates connected together; a pair of hooks mounted between said plates, one hook being fixed and the other pivoted; a supporting member for said frame mounted for limited movement between said plates; a link having enlarged circular ends engaged in sockets in said member and pivoted hook, and confined between said plates, said link forming an operative connection whereby the weight of said frame urges said hooks in engaging direction; a spring assisting such movement; and suspending means for said supporting member capable of being lowered upon the latter to move the same in opposition to said spring.

5. In an ice can lifter, the combination of a frame composed of a pair of spaced

plates connected together; a pair of hooks mounted between said plates, one hook being fixed and the other pivoted; a supporting member for said frame, pivoted between the plates thereof; stop means limiting the angular movement of said supporting member; a link having enlarged circular ends engaged in sockets in said member and the pivoted hook, and confined between said plates, said link forming an operative connection whereby the weight of said frame urges said hooks in engaging direction; a spring mounted between said plates and assisting such movement; suspending means for said supporting member pivoted thereto and capable of being lowered into contact therewith and when so lowered to move said member by the weight of the suspending means in opposition to said spring.

6. In an ice can lifter, the combination of a frame carrying a fixed hook and a pivoted hook; a supporting member for said frame pivoted thereto and operatively connected with said pivoted hook to move the same in engaging direction under the weight of the frame and the parts sustained thereby; a spring urging said member in hook engaging direction; a stop engaging said suporting member and limiting such motion, said stop and the pivot of the supporting member being constructed and arranged to sustain said frame in stable equilibrium, and to divide the load thereof approximately evenly between them; and a suspending member for said supporting member.

7. In an ice can lifter, the combination of a frame carrying a fixed hook and a pivoted hook; a supporting member for said frame pivoted therein and operatively connected with said pivoted hook to move the same in engaging direction under the weight of the frame and parts carried thereby; a spring urging said member and hook in engaging direction; a stop limiting such motion; and a suspending member for said supporting member constructed and arranged to permit rotation of said frame about a vertical axis when said suspending member is relieved of stress, and to resist such rotation when it is stressed.

In testimony whereof I have signed my name to this specification.

THOMAS SHIPLEY.