A. E. COLE.

SPEEDOMETER ATTACHMENT.

APPLICATION FILED NOV. 5, 1913.

1,118,742.

Patented Nov. 24, 1914.

Fig. 1.

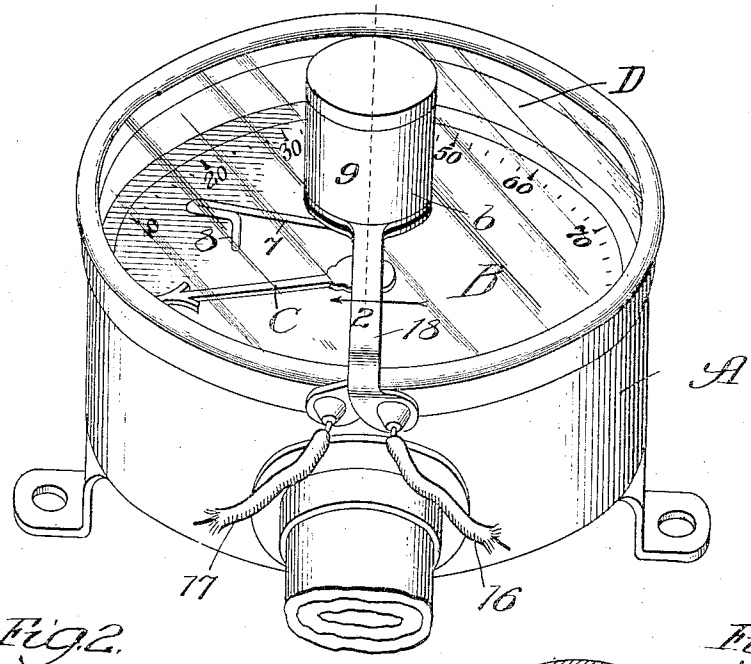

Fig. 2.

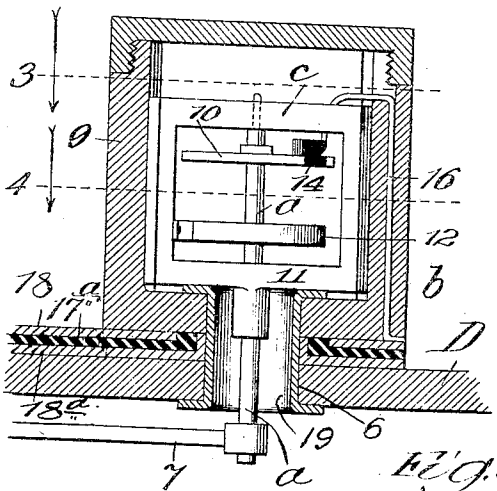

Fig. 3.

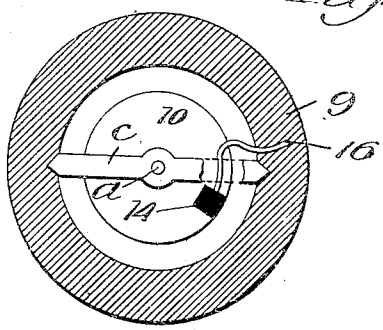

Fig. 4.

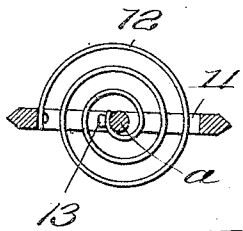

Fig. 5.

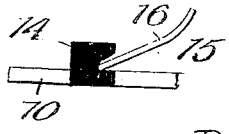

Witnesses:

Gaylord.

Irwin C. Bowman.

Inventor

Alonzo E. Cole,

By Robert Catheron & Co

Attys

UNITED STATES PATENT OFFICE.

ALONZO E. COLE, OF FOREST, ILLINOIS.

SPEEDOMETER ATTACHMENT.

1,118,742. Specification of Letters Patent. Patented Nov. 24, 1914.

Application filed November 5, 1913. Serial No. 799,411.

To all whom it may concern:

Be it known that I, ALONZO E. COLE, a citizen of the United States, residing at Forest, in the county of Cook and State of Illinois, have invented certain new and useful Improvements in Speedometer Attachments, of which the following is a specification, reference being had therein to the accompanying drawings.

My invention relates to electrical attachments for connecting annunciators with speedometers and analogous devices.

The object of the invention is to provide a simple and economical device readily attached to a speedometer and an electrical alarm with capacity for adjustment, so that when the indicator of the speedometer reaches the point at which warning is desired, electrical connection is made to operate the alarm.

In the accompanying drawings, I have shown a device embodying my invention in a preferred form.

Figure 1 is a front elevation of such a device in place upon a speedometer, with the wires to the alarm broken away; Fig. 2 is a cross-section taken on line 2 of Fig. 1; Fig. 3 is a cross-section on line 3 of Fig. 2; Fig. 4 is a cross-section on line 4 of Fig. 2; and Fig. 5 is an elevation of the insulation zone and contact points for making and breaking electrical connection.

In the drawings, A is a speedometer with a graduated dial face B; C an indicator or hand covered by a glass face or cover D through the center of which is cut the orifice 6. In the orifice 6 is snugly fitted a collar or hollow coupling 19 upon the upper end of which a cylindrical box *b* is rotatably secured so that the box may be turned around in a circle with the coupling as an axis. Within the box *b* and secured to the side walls 9 thereof is a metallic cross frame *c* and journaled to this cross frame is the upper end of a vertical shaft *a*, the lower end of which is threaded and projects downward through the hollow coupling 19 beneath the plane of the cover D and above the plane of the dial face. A rocking arm 7 swings between the glass face D and the dial B in front of the indicator C. This arm is provided with a projection 8 in the path of the indicator hand C and is rigidly secured at the center of the dial to the vertical shaft *a* within the box *b*, by being screwed onto its lower threaded end. The shaft *a* and the frame *c* are constructed of metal or other electrical conductor material, the box *b* and face D of non-conductor material. Near the upper end of shaft *a* is rigidly secured a disk 10 of electrical conductor material. An arm 11 is secured to the frame *c* with an end of a coil spring 12 inserted therein, the other end of the spring being inserted in a notch 13 in shaft *a* in such a manner as normally to exert tension to rotate the shaft to hold a plug 14, rigidly secured on disk 10 in contact with a wire end or contact point 15. Plug 14 is constructed of insulation. Leading from the annunciator are the positive and negative wires 16 and 17, carried on the bridge 18 to the box *b*. The wire 16 passes through an opening in box *b*, and is connected electrically to the contact point 15, which normally rests on the insulation plug 14 on disk 10. Wire 17 passes through an opening in box *b* and is connected electrically through frame *c* and shaft *a* to disk 10. Thus the wires 16 and 17 are insulated by the plug 14.

My device may be attached in place by removing the glass face D of the speedometer and cutting therein at its center the circular opening 6, into which the hollow coupling 19 fits snugly; slipping box *b* over the upper end of the coupling 19; screwing the arm 7 onto the lower threaded end of shaft *a;* replacing the cover D on the speedometer and fastening it; rotating box *b* upon coupling 19 until the forward end of arm 7 points to the place on the dial forward of the indicator at which warning is desired and connecting the wires 16 and 17 to the annunciator. When the indicator hand C, in moving forward, strikes the projection 8, it rotates the shaft *a*, causing contact point 15 to leave the insulation plug and rest on the disk 10. This establishes electrical connection between the wires 16 and 17 and operates the annunciator. As the indicator C moves backward, the tension of spring 12 causes the arm 7 to follow until the parts assume normal position with the plug 14 and wire end 15 in contact. This breaks electrical connection and the annunciator ceases to operate.

I am aware that many modifications of my invention will occur to those skilled in

the art, and I do not wish to be understood as limiting my invention to the preferred form shown and described herein, but

What I claim is:

1. In a device of the class described, a vertical shaft, a disk carried upon the upper end thereof, a portion of said disk being constructed of insulation and the remainder thereof and said shaft being made of electrical conductor material, a hand or swinging arm removably secured to the lower end of said shaft, wires or electrical conductors, one connected to said shaft and the other resting on said disk and a spring adapted normally to hold said last mentioned wire and the insulation portion of said disk in contact and to return the same to normal position when diverted therefrom by the swinging of said arm or hand substantially as and for the purposes described.

2. In a device adapted to be secured to the glass cover of a speedometer for closing an electric circuit when the indicated speed reaches a desired maximum, the combination of a collar adapted to be inserted in an opening in said cover, a box or casing adapted to be turned by hand upon said collar as an axis, a vertical shaft mounted in said casing and projecting through said collar, an arm carried at the lower end of said shaft and adapted to be moved by the speedometer indicator, a disk also carried by said shaft and constituting an electric contact, said disk being provided with an insulated portion which normally engages a fixed contact, a fixed contact for closing a circuit through said disk when said shaft is rotated, and a spring adapted to normally hold the insulated portion of said disk in engagement with said fixed contact.

In testimony whereof I hereunto affix my signature in the presence of two witnesses.

ALONZO E. COLE.

Witnesses:

MARY C. KRETZMANN,

ROBERT CATHERWOOD.